PiC409 FAMILY
USER'S MANUAL

Giddings & Lewis Electronics
A Giddings & Lewis Company
666 SOUTH MILITARY ROAD
P.O. BOX 1658
FOND DU LAC, WI 54935-7258

NOTE

Information in this document is subject to change without notice. The illustrations and specifications are not binding in detail. Giddings & Lewis Electronics shall not be liable for any technical or editorial omissions occurring in this document, nor for any consequential or incidental damages resulting from the use of this document.

DO NOT ATTEMPT to use any Giddings & Lewis product until the use of such product is completely understood. It is the responsibility of the user to make certain proper operation practices are understood. Giddings & Lewis products should be used only by qualified personnel and for the express purpose for which said products were designed.

Should information not covered in this document be required, contact the Customer Service Department, Giddings & Lewis Electronics Company, 666 South Military Road, P.O. Box 1658, Fond du Lac, WI 54935-7258. Giddings & Lewis Electronics can be reached by telephone at (414)-921–7100.

Manual Part No. 401-52342-02
Version 45-89

©1988 Giddings & Lewis Company, Inc.

TABLE OF CONTENTS

SECTION	DESCRIPTION	PAGE
	SECTION 1 - INTRODUCTION	
1.1	SCOPE	1-1
1.2	PART ORDERING	1-1
1.3	DESCRIPTION	1-1
1.4	SAFETY	1-2
	SECTION 2 - SYSTEM CONFIGURATION	
2.1	INTRODUCTION	2-1
2.2	SYSTEM COMPONENTS	2-1
2.2.1	HARDWARE COMPONENTS	2-1
2.2.2	SOFTWARE COMPONENTS	2-2
2.2.2.1	GENERAL	2-2
2.2.2.2	MEMORY MAP	2-3
2.3	SYSTEM CONFIGURATION	2-4
2.3.1	MEMORY MODULES	2-4
2.3.1.1	GENERAL	2-4
2.3.1.2	BANK SELECT	2-4
2.3.1.3	SIZE SELECT	2-4
2.3.1.4	MEMORY MODULE WORKSHEET	2-5
2.3.2	INPUT/OUTPUT (I/O) MODULES	2-5
2.3.2.1	GENERAL	2-5
2.3.2.2	ADDRESSING	2-5
2.3.2.3	I/O MODULE WORKSHEETS	2-7
2.3.3	MODULE PLACEMENT	2-8
2.3.3.1	GENERAL	2-8
2.3.3.2	MODULE PLACEMENT WORKSHEET	2-9
	SECTION 3 - INSTALLATION	
3.1	UNPACKING	3-1
3.2	NEW STYLE PiC409 RACKS	3-1
3.3	NEW STYLE MASTER RACK CONFIGURATION (expandable version)	3-2
3.3.1	CONTROL RELAY SIZE SELECTION	3-2
3.4	NEW STYLE EXTENSION RACK CONFIGURATION	3-3
3.4.1	EXPANSION TERMINATION MODULE	3-3
3.5	INTERCONNECTING NEW STYLE MASTER AND EXTENSION RACKS	3-3
3.6	OLD STYLE MASTER RACK CONFIGURATION	3-4
3.6.1	CONTROL RELAY SIZE SELECTION	3-4
3.7	OLD STYLE EXTENSION RACK CONFIGURATION	3-4
3.7.1	EXTENSION RACK ADDRESSING	3-4
3.7.2	RACK ADDRESS JUMPER	3-5
3.7.3	RACK SIZE JUMPER	3-5
3.7.4	TERMINATION RESISTOR NETWORKS	3-5

SECTION 3 - INSTALLATION (continued)

3.8	TERMINATION MODULE	3-5
3.9	INTERCONNECTING OLD STYLE RACKS	3-6
3.10	INTERCONNECTING NEW AND OLD STYLE MASTER AND EXTENSION RACKS	3-6
3.11	PiC49 RACK CONFIGURATION	3-6
3.12	PRIMARY AC POWER	3-6
3.13	MAIN DISCONNECT SWITCH	3-7
3.14	PiC49 RACK POWER CONNECTIONS	3-7
3.15	PiC409 RACK AC POWER CONNECTIONS (racks with built-in power supply)	3-7
3.16	PiC409 RACK POWER CONNECTIONS (old style racks with external power supply)	3-9
3.16.1	DC POWER FOR MASTER RACKS WITH TEN-TERMINAL BARRIER STRIPS	3-9
3.16.2	DC POWER FOR MASTER RACKS WITH EIGHT-TERMINAL BARRIER STRIPS	3-9
3.17	EXTENSION RACKS WITHOUT BUILT-IN POWER SUPPLIES	3-10
3.18	SINGLE POINT GROUND	3-11
3.18.1	GROUND PATHS	3-11
3.18.2	EQUIPMENT AND CHASSIS GROUND	3-13
3.18.3	GROUNDING METHODS	3-13
3.19	SHIELDING AND NOISE	3-13
3.19.1	GROUNDING CABLE SHIELDS	3-15
3.20	SIGNAL ISOLATION	3-15
3.21	ELECTRICAL FILTERS	3-15
3.22	MOUNTING	3-16

SECTION 4 FUNCTION OF CONTROLS

4.1	INTRODUCTION	4-1
4.2	PiC CONTROL PANEL	4-1
4.2.1	MODE SWITCH	4-2
4.2.1.1	PiC RUN	4-2
4.2.1.2	PROGRAM	4-2
4.2.1.3	LOAD	4-2
4.2.1.4	VERIFY	4-3
4.2.1.5	RECORD	4-3
4.2.1.6	AUX 1	4-3
4.2.1.7	AUX 2	4-3
4.2.1.8	AUX 3	4-3
4.2.2	BAUD RATE TERMINAL SWITCH	4-4
4.2.3	BAUD RATE LOADER SWITCH	4-4
4.2.4	HALT BUTTON	4-4
4.2.5	INITIALIZE BUTTON	4-4
4.2.6	SCAN LOSS LIGHT	4-4
4.2.7	VOLTAGE FAIL LIGHT	4-4
4.2.8	POWER LIGHT	4-5
4.2.9	RESET BUTTON	4-5
4.2.10	LOADER SOCKET	4-5
4.2.11	TERMINAL SOCKET	4-5

SECTION 4 FUNCTION OF CONTROLS (continued)

4.2.12	STATUS SWITCHES	4-5
4.2.13	STATUS LIGHTS	4-6
4.2.13.1	STATUS LIGHT 1	4-6
4.2.13.2	STATUS LIGHT 2	4-6
4.2.13.3	STATUS LIGHT 3	4-6
4.2.13.4	STATUS LIGHT 4	4-6

SECTION 5 - START-UP

5.1	INTRODUCTION	5-1
5.2	MODULE INSTALLATION	5-1
5.3	START-UP	5-2
5.3.1	INITIAL START-UP	5-2
5.3.2	STANDARD START-UP	5-5
5.4	RUNTIME INITIALIZATION	5-6

SECTION 6 - TROUBLESHOOTING

6.1	POWER SUPPLY	6-1
6.2	START-UP DIAGNOSTICS	6-1
6.3	PERIPHERAL DEVICES	6-1
6.4	CPOS CONTROL PANEL LEDS	6-2

APPENDIX

APPENDIX A.....MODULE INFORMATION
APPENDIX B.....POWER SUPPLIES
APPENDIX C .....PROGRAM LOADERS
APPENDIX D .....TERMINALS
APPENDIX E.....PRINTERS
APPENDIX F .....EPROM PROGRAMMERS
APPENDIX G.....GLOSSARY

SECTION 1 - INTRODUCTION

1.1 SCOPE

This manual is intended to provide sufficient information to allow the user to install, operate and maintain the Giddings & Lewis Programmable industrial Computer or PiC. Information regarding programming of the PiC is supplied in the PiC409 Family Programming Manual. All information presented within this manual should be thoroughly understood before using the PiC409 or PiC49 to ensure safe operation and optimum performance of equipment.

The following is a listing of the sections contained in this manual and the content of these sections:

INTRODUCTION - Provides general information regarding this manual and the PiC.

SYSTEM ARCHITECTURE AND CONFIGURATION - Complete explanation regarding PiC operation. Also, information and aids concerning system design and addressing.

INSTALLATION - Contains a progression of instructions necessary to place the PiC in an operational status.

FUNCTION OF CONTROLS - Provides an explanation of all the controls associated with the operator control panel.

START-UP - Provides procedural information regarding initial and standard start-up of the PiC.

TROUBLESHOOTING - Contains common problems that may occur and the corresponding corrective action.

APPENDICES - Provides individual publications concerning PiC boards, recommended power supplies, recommended I/O peripherals. A glossary is also contained in this section.

1.2 PART ORDERING

Please supply the following information when ordering replacement parts to ensure that the proper part is shipped and also to aid in the rapid shipment of that part:

1. If the part has a serial number, supply the serial number of that part.
2. The part number and a description of the part.
3. A customer P.O. number. A P.O. number is required even if the part being ordered is under warranty.
4. The desired method of shipping.
5. The name and shipping address of the person and company to receive the parts.

1.3 DESCRIPTION

The PiC409 and PiC49 are designed to provide the advantages of the latest in solid-state technology along with the simplicity of relay logic diagrams. Easily understood ladder diagrams are programmed to provide control of motor starters, solenoid valves, external circuits, etc. Limit switches, pressure switches, or control stations can also be monitored.

Also, a wide range of analog devices, potentiometers, resolvers or Inductosyn scales and sliders may be used to measure motion or angular position. Built-in control relays and timers are available without utilizing inputs or outputs. Timers may be programmed either as TE (delay on energizing) or TD (delay on deenergizing). Both control relays and timers have practically an unlimited number of contacts available.

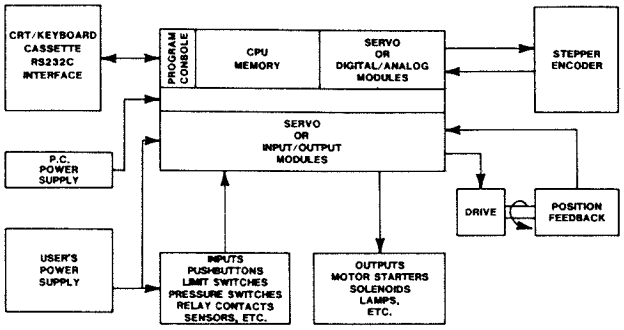

FIGURE 1-1 BLOCK DIAGRAM

Three types of memory systems are available: Static Random Access Memory (RAM), CMOS RAM Memory with on board battery backup and Erasable Programmable Read Only Memory (EPROM).

1.4 SAFETY

This manual should be completely read and understood prior to installing, operating or troubleshooting the PiC. Observe all federal, state and local safety standards that are pertinent to this piece of equipment.

CAUTION, IMPORTANT and NOTE blocks will be found throughout this manual. The following is a depiction of how these items will appear and the associated definition of each:

CAUTION

Installation, operating and maintenance procedures, practices, etc., which will result in personnel injury or loss of life if not carefully followed.

IMPORTANT

Installation, operating and maintenance procedures, practices, etc., which will result in damage to the equipment if not employed.

NOTE

Installation, operating and maintenance procedures, practices, etc., which are essential to emphasize.

SECTION 2 - SYSTEM CONFIGURATION

2.1 INTRODUCTION

This section introduces the basic hardware and software components of the PiC. This section also describes how to configure the PiC hardware to facilitate control of the machine or process. Blank worksheets are provided to document the final hardware configuration. The worksheets should be completed to aid in the installation, start-up and troubleshooting of the PiC system.

2.2 SYSTEM COMPONENTS

The PiC is a modular system that requires some basic hardware and software components. Additional hardware and software components may be selectively added to the system according to the application requirements.

2.2.1 Hardware Components

The basic PiC consists of the following hardware components:

1. Master Rack: At least one rack is required to accommodate the microcomputer modules. This rack is referred to as a master rack. Any microcomputer module may be inserted into any slot in the master rack. The sockets, into which the microcomputer modules are inserted, are connected to the backplane. The backplane interconnects the microcomputer modules with a power source and facilitates logic level communication between microcomputer modules. The backplane may also be referred to as the system bus or motherboard.

NOTE

Up to seven extension racks may be connected to the master rack to provide additional slots for more microcomputer modules. Only AC input and output modules, DC input and output modules and the Scan Monitor Module will function in an extension rack.

---

2. Voltage requirements: The master rack requires a +5 volts DC source, a +15 volts DC source and a -15 volts DC source. Extension racks require a +5 volts DC source. The +5 volts DC source is needed for logic level communication to occur between microcomputer modules. The +15 volts DC and -15 volts DC sources are needed to enable the PiC to communicate with peripheral devices (loaders, terminals, printers and EPROM programmers). The +15 volts DC and -15 volts DC sources also provide the voltages needed to control analog devices, such as resolvers. Master racks and extension racks are available with a built-in switching power supply that provides the needed voltage source.

3. 6809 CPU Module: See the corresponding Instruction Sheet, located in APPENDIX A, for a description of this module.

4. PiC Support Module: See the corresponding Instruction Sheet, located in APPENDIX A, for a description of this module.

5. PiC Control Panel: See description in SECTION FOUR.

6. Programmer's Console Module: See the corresponding Instruction Sheet, located in APPENDIX A, for a description of this module.

7. Compiler Module: See the corresponding Instruction Sheet, located in APPENDIX A, for a description of this module.

8. Memory: Various types of memory modules (RAM, CMOS and EPROM) are available to store the Ladder Diagram Network (LDN) and associated Call Routines. See the corresponding Instruction Sheets, located in APPENDIX A, for descriptions of these modules.

NOTE

The PiC Control Panel, Programmer's Console Module and Compiler Module will not be required to run the machine or process after the LDN is finalized and stored in memory. However, the start-up diagnostics will not be executed if any of these devices are removed.

Using the aforementioned basic hardware, the PiC may be used to program the LDN and communicate with peripheral devices (loaders, terminals, printers and EPROM programmers). Additional microcomputer modules must be added to meet other needs of the particular application. For example: Microcomputer modules are available to control ac, DC and analog inputs and outputs. APPENDIX A describes the various microcomputer modules that are available.

2.2.2 Software Components

2.2.2.1 General - The PiC software is adapted to control a particular machine or process via the Ladder Diagram Network (LDN). The LDN is a custom program that logically controls the equipment corresponding to the machine or process. The LDN is programmed using ladder diagram circuits and programming statements as described in the PiC409 Family Programming Manual.

One of the programming statements available to the LDN is the Call Statement. Call Statements may be inserted into the LDN to initiate execution of subroutines written in assembly language. These subroutines are referred to as Call Routines. When a Call Statement is scanned, the function defined by the corresponding Call Routine will be performed. Call Routines are available from Giddings and Lewis Electronics that perform various functions; such as motion control, remote communications, data acquisition, etc. The desired Call Routines may be selected from the Giddings and Lewis Electronics library of Call Routines. The selected Call Routines will be supplied to the user on a tape cassette or cartridge or on an Erasable Programmable Read Only Memory (EPROM) module to allow the user to load or copy Call Routines into PiC memory.

Various software components are needed to facilitate development of the LDN and other system functions. The basic PiC consists of the following software components:

Control Panel Operating Systems (CPOS): This program controls the PiC Control Panel. The functions on the PiC Control Panel are described in SECTION FOUR. CPOS resides in EPROM on the 6809 CPU Module.

Run Time: This program controls scanning of the Ladder Diagram Network (LDN) in the Run Mode. Run Time resides in EPROM on the 6809 CPU Module.

LDN Compiler: This program converts the LDN into a binary format that the 6809 CPU Module can understand. The LDN Compiler also provides the ability

to enter and edit the LDN in the Program Mode. See the PiC409 Family Programming Manual for more description about the operation of the LDN Compiler. The LDN Compiler resides in EPROM on the Compiler Module.

Real Time Debug (RTD): This program provides diagnostic facilities for system design and maintenance. See the PiC409 Family Programming Manual for more description about the operation of Real Time Debug. Real Time Debug resides in EPROM on the Compiler Module.

Programmer's Keyboard Operating System (PKOS): This program provides the ability to monitor and modify hexadecimal data. PKOS resides in EPROM on the Compiler Module.

Message Formatter: This program provides the ability to enter and delete video messages. See the PiC409 Family Programming Manual for more description about the operation of the Message Formatter. The Message Formatter resides in EPROM on the Compiler Module.

EPROM Programmer: This program provides the ability to copy data from PiC memory onto EPROM devices that are mounted in an external EPROM programming unit. See the PiC409 Family Programming Manual for description of the operation of the EPROM Programmer. The EPROM Programmer resides in EPROM on the Compiler Module.

Start-Up Diagnostics: This program tests various functions on the 6809 CPU Module, PiC Support Module and Compiler Module. The Start-Up Diagnostics program is performed following a power-on or reset condition. See SECTION 6, TROUBLESHOOTING, for more description about the operation of the start-up diagnostics.

Call Routine Installer: This program provides the ability to selectively load Call Routines into PiC memory from the loader. Using this program, only Call Routines that will be utilized need to be loaded into PiC memory. See the PiC409 Family Programming Manual for description of the operation of the Call Routine Installer. The Call Routine Installer resides in EPROM on the Compiler Module.

2.2.2.2 Memory Map - The 6809 CPU Module can address up to 64K bytes (1K = 1024, 1 byte = 8 bits) of memory addresses. The memory map (FIGURE 2-1) shows where the various software components will reside within the 64K byte boundary.

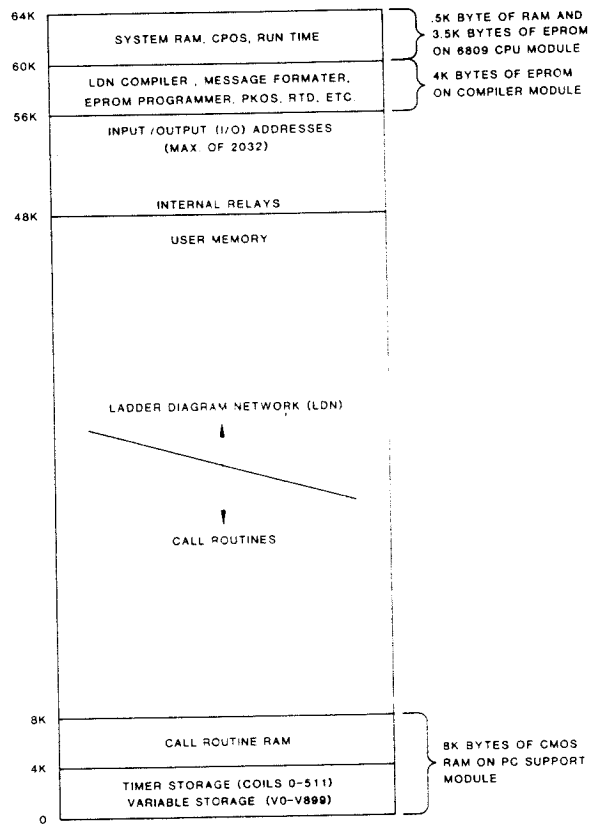

FIGURE 2-1 MEMORY MAP

NOTE

40K bytes of addresses are reserved for user memory. Call Routines will be loaded into the lower portion of user memory. The LDN will be loaded immediately following the Call Routines.

2.3 SYSTEM CONFIGURATION

2.3.1 Memory Modules

2.3.1.1 General - The PiC can accommodate up to 40K bytes of user memory. The amount of user memory (in 4K byte increments) that should be installed is dependent on the amount of memory needed to store the Ladder Diagram Network (LDN) and associated Call Routines. Three types of memory modules may be used to populate user memory; Static RAM, EPROM and CMOS RAM. The various types of memory modules are described in the corresponding Instruction Sheets in APPENDIX A.

NOTE

One memory module must be addressed to start at 8K. Memory modules installed after the memory module starting at 8K, must be addressed so that the user memory is continuous but not overlapping.

Address Switches are provided on each memory module to select the first memory address to be occupied by each memory module. Reserve memory following the starting address equal to the amount of memory (in K bytes) occupied by the memory module. The amount of memory occupied by a memory module determines the starting address that can be assigned to the memory module. Refer to the Instruction Sheets of the memory modules to be utilized to determine what starting addresses are available to those memory modules. The Instruction Sheets also describe how to set the Address Switches on the memory modules to attain the desired starting address.

2.3.1.2 Bank Select - Memory modules that have the bank select feature have eight Bank Select Switches. The bank select feature enables up to eight memory modules to be addressed to the same memory location. However, memory modules addressed to the same memory location must be assigned to different bank numbers (1-8). The Memory Bank Select Call Routine allows the user to utilize the different banks. If the bank select feature is not utilized, all Bank Select Switches should be set to bank 1. The Instruction Sheets that correspond to memory modules with the bank select feature describe how to set the Bank Select Switches to the desired banks.

2.3.1.3 Size Select - The amount of memory occupied by memory modules with the size select feature is selectable through Size Select Switches. The Instruction Sheets that correspond to memory modules with the size select feature describe how to set the Size Select Switches to reserve the proper amount of memory.

IMPORTANT

The installation of a 4K, 8K, 16K, etc., memory module reserves the entire 4K, 8K, 16K, etc., group of addresses beginning with the starting address selected via the Address Switches. A memory module may not be addressed within the memory address group reserved for another memory module in the same bank.

2.3.1.4 Memory Module Worksheet - The Memory Module Worksheet should be completed to ensure that the addresses assigned to each memory module do not overlap the addresses assigned to other memory modules in the same bank. If the bank select feature is used, copies of the Memory Module Worksheet should be made to allow a worksheet to be completed for each bank used. The completed worksheet(s) should be retained for future reference to facilitate module insertion and replacement, memory expansion, etc.

The Memory Module Worksheet has five columns:

1. The STARTING ADDRESS column lists all possible starting addresses, in 4K byte increments, that can be assigned to a memory module. Six, 4K byte groups are reserved for the basic system software and I/O modules. The remaining ten, 4K byte groups (40K bytes) are provided to address memory modules that will store the LDN and associated Call Routines.

2. The MODULE NOMENCLATURE column is provided to enter the name of the memory module to be assigned to the corresponding starting address.

3. The ADDRESS SWITCHES column is provided to enter the Address Switch settings that correspond to the starting address.

4. The SIZE SELECT SWITCHES column is provided to enter the Size Select Switch settings that correspond to the amount of memory to be occupied by the memory module.

5. The BANK SELECT SWTICHES column is provided to enter the Bank Select Switch settings that correspond to the assigned bank(s).

Darken the side of the Address Switches, Size Select Switches and Bank Select Switches (ON or OFF) to be depressed. Switches that do not exist or are not used on a particular memory module may be ignored.

After a memory module is assigned to a particular starting address, reserve the amount of memory occupied by the memory module. For example: If an 8K memory module is assigned a starting address of 20K, the 4K byte groups starting at 20K and 24K must be reserved. Therefore, the next memory module should be addressed to start at 28K. If a memory module consumes more than one 4K byte group, the module nomenclature and switch settings should only be entered in the row that corresponds to the starting address. The succeeding 4K byte group(s) occupied by the memory module should be marked to indicate that this group(s) is reserved. For example: Place an "X" through the area provided for entry of the module nomenclature to indicate a reserved group of addresses.

2.3.2 Input/Output (I/O) Modules

2.3.2.1 General- An I/O module is any microcomputer module that is addressed within the boundaries shown in the I/O ADDRESSES column in TABLE 2-1. I/O modules include AC and DC Input and Output Modules and Special Purpose Modules supported by Call Routines.

2.3.2.2 Addressing - The PiC can locally control up to 2,032 I/O addresses. An I/O address will be either energized (high) or de-energized (low). I/O addresses may be used to monitor the status of one or more input devices, energize/de-energize one or more output devices or provide addresses for various special purpose modules.

MEMORY MODULE WORKSHEET

STARTING ADDRESS	MODULE NOMENCLATURE	ADDRESS SWITCHES*	SIZE SELECT* SWITCHES	BANK SELECT SWITCHES*
0K	RESERVED FOR PC SUPPORT MODULE			
4K	RESERVED FOR PC SUPPORT MODULE			
8K		1 2 3 4 5 6 7 8 ON OFF	1 2 3 4 ON OFF	1 2 3 4 5 6 7 8 ON OFF
12K		1 2 3 4 5 6 7 8 ON OFF	1 2 3 4 ON OFF	1 2 3 4 5 6 7 8 ON OFF
16K		1 2 3 4 5 6 7 8 ON OFF	1 2 3 4 ON OFF	1 2 3 4 5 6 7 8 ON OFF
20K		1 2 3 4 5 6 7 8 ON OFF	1 2 3 4 ON OFF	1 2 3 4 5 6 7 8 ON OFF
24K		1 2 3 4 5 6 7 8 ON OFF	1 2 3 4 ON OFF	1 2 3 4 5 6 7 8 ON OFF
28K		1 2 3 4 5 6 7 8 ON OFF	1 2 3 4 ON OFF	1 2 3 4 5 6 7 8 ON OFF
32K		1 2 3 4 5 6 7 8 ON OFF	1 2 3 4 ON OFF	1 2 3 4 5 6 7 8 ON OFF
36K		1 2 3 4 5 6 7 8 ON OFF	1 2 3 4 ON OFF	1 2 3 4 5 6 7 8 ON OFF
40K		1 2 3 4 5 6 7 8 ON OFF	1 2 3 4 ON OFF	1 2 3 4 5 6 7 8 ON OFF
44K		1 2 3 4 5 6 7 8 ON OFF	1 2 3 4 ON OFF	1 2 3 4 5 6 7 8 ON OFF
48K	RESERVED FOR I/O MODULES			
52K	RESERVED FOR I/O MODULES			
56K	RESERVED FOR COMPILER MODULE			
60K	RESERVED FOR 6809 CPU MODULE			

*DARKEN SIDE OF SWITCH (ON or OFF) TO BE DEPRESSED

Each I/O address is represented by a four-digit number. The first digit of the I/O address represents the rack into which the corresponding I/O module is inserted. I/O modules inserted into the master rack will have a "2" as the first digit of the I/O address. Up to seven extension racks are allowed. I/O modules inserted into the first extension rack will have a "3" as the first digit of the I/O address, second extension rack - "4", third extension rack - "5", ..., seventh extension rack - "9". The last three digits of the I/O address represent the individual addresses within each rack. TABLE 2-1 shows the addresses available to each rack.

RACK NAME	PC ADDRESSES	MAX. I/O PER RACK
MASTER RACK	2000 - 2239	240
1st EXTENSION	3000 - 3255	256
2nd EXTENSION	4000 - 4255	256
3rd EXTENSION	5000 - 5255	256
4th EXTENSION	6000 - 6255	256
5th EXTENSION	7000 - 7255	256
6th EXTENSION	8000 - 8255	256
7th EXTENSION	9000 - 9255	256

TABLE 2-1 RACK I/O ADDRESSES

Address Switches are provided on I/O modules without fixed addresses to select the first I/O address to be occupied by each I/O module. Reserve I/O addresses following the starting address equal to the number of I/O addresses occupied by the I/O module. The number of I/O addresses occupied by an I/O module determines the starting addresses that can be assigned to the I/O module. Refer to the I/O Module Instruction Sheets, located in APPENDIX A, to determine what starting addresses are available to each I/O module. The Instruction Sheets also describe how to set the Address Switches to attain the desired starting address.

NOTE

The master rack has 16 I/O addresses reserved for addressing fixed devices; e.g. PIA device on PiC Support Module. Therefore, the master rack is limited to 240 I/O addresses as compared to the 256 I/O addresses available on the extension racks.

IMPORTANT

The installation of an I/O module reserves all I/O addresses occupied by the I/O module beginning with the starting address. An I/O module may not be addressed within the addresses reserved for another I/O module.

2.3.2.3 I/O Module Worksheets- The I/O Module Worksheets should be completed to ensure that the addresses assigned to each I/O module do not overlap the addresses assigned to other I/O modules in the same rack. If more than one rack is used, copies of the I/O Module Worksheets should be made to allow a set of worksheets to be completed for each rack. The completed worksheets should be retained for future reference to facilitate module insertion and replacement, I/O module expansion, I/O device troubleshooting, etc.

The rack address (2-9) should be entered in the area provided in the top line of each I/O Module Worksheet. The rack address is the first digit of the I/O address; the rack address is represented by the "X" digit of each address in the ADDRESS column.

The I/O Module Worksheets have five columns:

1. The MODULE NOMENCLATURE column is provided to enter the name of the I/O module to be assigned to the corresponding starting address. Every fourth address in the ADDRESS column (X000, X004, X008, etc.) may be a starting address. The starting addresses are in increments of four, because the least number of I/O addresses that an I/O module can occupy is four. Remember, an I/O module may only be assigned to a starting address that is listed as being available in the I/O Module Instruction Sheet.

2. The ADDRESS column lists 256 addresses. The last 16 addresses (X240-X255) are not available for use in the master rack. X = Rack Address.

3. The ADDRESS DESCRIPTION column is provided to enter the function of each address. For example: If a particular address on a DC input module is wired to monitor the status of a limit switch, the nomenclature of the limit switch should be placed in the ADDRESS DESCRIPTION column adjacent to the address. The addresses assigned to some special purpose modules, however, may not have an external reference. For example: The Digitizing Reference Module occupies four I/O addresses. The functions of these addresses are internal to the PiC. Therefore, a description of the individual I/O addresses occupied by the Digitizing Reference Module should not be entered in the ADDRESS DESCRIPTION column.

4. The ADDRESS SWITCHES column is provided to enter the Address Switch settings that correspond to the starting address. Darken the side of the Address Switches (ON or OFF) to be depressed. Address Switches that do not exist, or are not used on a particular I/O Module, may be ignored. Do not darken either side of a switch that is ignored. Some I/O modules with fixed addresses will not have Address Switches; e.g., Programmer's Console Module. Ensure that the addresses assigned to I/O with fixed addresses are also reserved.

5. The MISCELLANEOUS SWITCHES AND JUMPERS column is provided to enter the setting or position of miscellaneous switches or jumpers.

2.3.3 Module Placement

2.3.3.1 General - Any type of microcomputer module, after being properly addressed, will operate in any slot in the master rack. However, the following recommendations and restrictions should be considered when deciding where to locate microcomputer modules:

1. Only AC Input and Output Modules, DC Input and Output Modules and the Scan Monitor Module may be inserted into extension racks.

2. Modules installed with the optional faceplate require an empty slot on both sides of the module.

3. Certain modules require vacant slot on the right side of the slot in which the module is inserted because of the size of the components on these modules. The Instruction Sheet for each module, located in APPENDIX A, will indicate if the module needs two slots.

4. On some older PiC's, slots 3 and 24, in both the upper and lower nest of the master rack, are not available for board insertion.

5. Two sockets, located on the rear of the PiC Control Panel, are provided to accommodate the mounting of the PiC Control Panel onto the

front-edge connectors of the PiC Support Module and the Programmer's Console Module. The PiC Support Module must be inserted six slots to the left of the Programmer's Console Module to allow mounting of the PiC Control Panel. Normally, the PiC Support Module will be inserted into slot 1 and the Programmer's Console Module into slot 7 of the master rack. With the modules in these locations, the Control Panel will cover slots 1 through 8.

6. The CPU Module should be inserted behind the PiC Control Panel, so that the RESET Button on the 6809 CPU Module is accessible through the RESET hole on the PiC Control Panel. The 6809 CPU Module should be placed three slots to the left of he Programmer's Console Module to provide access to the RESET Button through the hole. Since the recommended slot for the Programmer's Console Module is slot 7, the CPU Module should be inserted into slot 4.

7. Only modules without front-edge connectors may be inserted into open slots behind the PiC Control Panel.

8. Separate the ac, dc, memory and analog modules into groups within the rack(s). Insert the memory modules as close to the 6809 CPU Module as possible. Insert the ac modules as far away from the 6809 CPU Module as possible. Therefore, if the 6809 CPU Module is inserted into slot 4 of the upper nest, as recommended, the AC Modules should be inserted into the opposite side of the lower nest. If an extension rack is used, insert the AC Modules into the extension rack.

9. The Scan Monitor Module, if used, should be inserted into the slot after the last module in the last nest; furthest from the 6809 CPU Module.

2.3.3.2 Module Placement Worksheet - The Module Placement Worksheet should be completed to assign a nest and slot number to all microcomputer modules in each rack. The Memory Module Addressing Worksheet(s) and the I/O Module Addressing Worksheets should be completed first to aid in the completion of the Module Placement Worksheet. If more than one rack is used, copies of the Module Placement Worksheet should be made to allow a worksheet to be completed for each rack. The completed worksheet(s) should be retained for future reference to facilitate module insertion and replacement, troubleshooting, etc.

Refer to the Module Placement Worksheet. The rack address (2-9) should be entered in the area provided. Rack address 2 is the master rack, rack address 3 is the first extension rack, rack address 4 is the second extension rack, etc. A rack may have one or two nests. Racks with two nests will have an upper and lower nest. The lower nest can be ignored for racks with one nest. The slot numbers corresponding to both the upper and lower nest are listed between the two nests. The nomenclature of the module to be inserted into each slot and the corresponding address (if applicable) of each module should be entered in the two boxes adjacent to each slot number. Vacant rows in the nest, indicate that a module should not be inserted into that slot.

I/O MODULE ADDRESSING WORKSHEET -RACK ADDRESS (2-9): ____

MODULE NOMENCLATURE	ADDRESS	ADDRESS DESCRIPTION	ADDRESS SWITCHES *	MISC SWITCHES & JUMPERS
	X000		1 2 3 4 5 6 7 8 ON OFF	
	X001			
	X002			
	X003			
	X004		1 2 3 4 5 6 7 8 ON OFF	
	X005			
	X006			
	X007			
	X008		1 2 3 4 5 6 7 8 ON OFF	
	X009			
	X010			
	X011			
	X012		1 2 3 4 5 6 7 8 ON OFF	
	X013			
	X014			
	X015			
	X016		1 2 3 4 5 6 7 8 ON OFF	
	X017			
	X018			
	X019			
	X020		1 2 3 4 5 6 7 8 ON OFF	
	X021			
	X022			
	X023			
	X024		1 2 3 4 5 6 7 8 ON OFF	
	X025			
	X026			
	X027			
	X028		1 2 3 4 5 6 7 8 ON OFF	
	X029			
	X030			
	X031			

*DARKEN SIDE OF SWITCH (ON or OFF) TO BE DEPRESSED

I/O MODULE ADDRESSING WORKSHEET -RACK ADDRESS (2-9): ____

MODULE NOMENCLATURE	ADDRESS	ADDRESS DESCRIPTION	ADDRESS SWITCHES *	MISC SWITCHES & JUMPERS
	X032		1 2 3 4 5 6 7 8 ON OFF	
	X033			
	X034			
	X035			
	X036		1 2 3 4 5 6 7 8 ON OFF	
	X037			
	X038			
	X039			
	X040		1 2 3 4 5 6 7 8 ON OFF	
	X041			
	X042			
	X043			
	X044		1 2 3 4 5 6 7 8 ON OFF	
	X045			
	X046			
	X047			
	X048		1 2 3 4 5 6 7 8 ON OFF	
	X049			
	X050			
	X051			
	X052		1 2 3 4 5 6 7 8 ON OFF	
	X053			
	X054			
	X055			
	X056		1 2 3 4 5 6 7 8 ON OFF	
	X057			
	X058			
	X059			
	X060		1 2 3 4 5 6 7 8 ON OFF	
	X061			
	X062			
	X063			

*DARKEN SIDE OF SWITCH (ON or OFF) TO BE DEPRESSED

I/O MODULE ADDRESSING WORKSHEET -RACK ADDRESS (2-9): ____

MODULE NOMENCLATURE	ADDRESS	ADDRESS DESCRIPTION	ADDRESS SWITCHES *	MISC SWITCHES & JUMPERS
	X064		1 2 3 4 5 6 7 8 ON OFF	
	X065			
	X066			
	X067			
	X068		1 2 3 4 5 6 7 8 ON OFF	
	X069			
	X070			
	X071			
	X072		1 2 3 4 5 6 7 8 ON OFF	
	X073			
	X074			
	X075			
	X076		1 2 3 4 5 6 7 8 ON OFF	
	X077			
	X078			
	X079			
	X080		1 2 3 4 5 6 7 8 ON OFF	
	X081			
	X082			
	X083			
	X084		1 2 3 4 5 6 7 8 ON OFF	
	X085			
	X086			
	X087			
	X088		1 2 3 4 5 6 7 8 ON OFF	
	X089			
	X090			
	X091			
	X092		1 2 3 4 5 6 7 8 ON OFF	
	X093			
	X094			
	X095			

*DARKEN SIDE OF SWITCH (ON or OFF) TO BE DEPRESSED

I/O MODULE ADDRESSING WORKSHEET -RACK ADDRESS (2-9): ____

MODULE NOMENCLATURE	ADDRESS	ADDRESS DESCRIPTION	ADDRESS SWITCHES *	MISC SWITCHES & JUMPERS
	X096		1 2 3 4 5 6 7 8 ON OFF	
	X097			
	X098			
	X099			
	X100		1 2 3 4 5 6 7 8 ON OFF	
	X101			
	X102			
	X103			
	X104		1 2 3 4 5 6 7 8 ON OFF	
	X105			
	X106			
	X107			
	X108		1 2 3 4 5 6 7 8 ON OFF	
	X109			
	X110			
	X111			
	X112		1 2 3 4 5 6 7 8 ON OFF	
	X113			
	X114			
	X115			
	X116		1 2 3 4 5 6 7 8 ON OFF	
	X117			
	X118			
	X119			
	X120		1 2 3 4 5 6 7 8 ON OFF	
	X121			
	X122			
	X123			
	X124		1 2 3 4 5 6 7 8 ON OFF	
	X125			
	X126			
	X127			

*DARKEN SIDE OF SWITCH (ON or OFF) TO BE DEPRESSED

I/O MODULE ADDRESSING WORKSHEET -RACK ADDRESS (2-9): ____

MODULE NOMENCLATURE	ADDRESS	ADDRESS DESCRIPTION	ADDRESS SWITCHES *	MISC SWITCHES & JUMPERS
	X128		1 2 3 4 5 6 7 8 ON OFF	
	X129			
	X130			
	X131			
	X132		1 2 3 4 5 6 7 8 ON OFF	
	X133			
	X134			
	X135			
	X136		1 2 3 4 5 6 7 8 ON OFF	
	X137			
	X138			
	X139			
	X140		1 2 3 4 5 6 7 8 ON OFF	
	X141			
	X142			
	X143			
	X144		1 2 3 4 5 6 7 8 ON OFF	
	X145			
	X146			
	X147			
	X148		1 2 3 4 5 6 7 8 ON OFF	
	X149			
	X150			
	X151			
	X152		1 2 3 4 5 6 7 8 ON OFF	
	X153			
	X154			
	X155			
	X156		1 2 3 4 5 6 7 8 ON OFF	
	X157			
	X158			
	X159			

*DARKEN SIDE OF SWITCH (ON or OFF) TO BE DEPRESSED

I/O MODULE ADDRESSING WORKSHEET -RACK ADDRESS (2-9): _____

MODULE NOMENCLATURE	ADDRESS	ADDRESS DESCRIPTION	ADDRESS SWITCHES *	MISC SWITCHES & JUMPERS
	X160		1 2 3 4 5 6 7 8 ON OFF	
	X161			
	X162			
	X163			
	X164		1 2 3 4 5 6 7 8 ON OFF	
	X165			
	X166			
	X167			
	X168		1 2 3 4 5 6 7 8 ON OFF	
	X169			
	X170			
	X171			
	X172		1 2 3 4 5 6 7 8 ON OFF	
	X173			
	X174			
	X175			
	X176		1 2 3 4 5 6 7 8 ON OFF	
	X177			
	X178			
	X179			
	X180		1 2 3 4 5 6 7 8 ON OFF	
	X181			
	X182			
	X183			
	X184		1 2 3 4 5 6 7 8 ON OFF	
	X185			
	X186			
	X187			
	X188		1 2 3 4 5 6 7 8 ON OFF	
	X189			
	X190			
	X191			

*DARKEN SIDE OF SWITCH (ON or OFF) TO BE DEPRESSED

I/O MODULE ADDRESSING WORKSHEET -RACK ADDRESS (2-9): ____

MODULE NOMENCLATURE	ADDRESS	ADDRESS DESCRIPTION	ADDRESS SWITCHES *	MISC SWITCHES & JUMPERS
	X192		1 2 3 4 5 6 7 8 ON OFF	
	X193			
	X194			
	X195			
	X196		1 2 3 4 5 6 7 8 ON OFF	
	X197			
	X198			
	X199			
	X200		1 2 3 4 5 6 7 8 ON OFF	
	X201			
	X202			
	X203			
	X204		1 2 3 4 5 6 7 8 ON OFF	
	X205			
	X206			
	X207			
	X208		1 2 3 4 5 6 7 8 ON OFF	
	X209			
	X210			
	X211			
	X212		1 2 3 4 5 6 7 8 ON OFF	
	X213			
	X214			
	X215			
	X216		1 2 3 4 5 6 7 8 ON OFF	
	X217			
	X218			
	X219			
	X220		1 2 3 4 5 6 7 8 ON OFF	
	X221			
	X222			
	X223			

*DARKEN SIDE OF SWITCH (ON or OFF) TO BE DEPRESSED

I/O MODULE ADDRESSING WORKSHEET -RACK ADDRESS (2-9): _____

MODULE NOMENCLATURE	ADDRESS	ADDRESS DESCRIPTION	ADDRESS SWITCHES *	MISC SWITCHES & JUMPERS
	X224		1 2 3 4 5 6 7 8 ON OFF	
	X225			
	X226			
	X227			
	X228		1 2 3 4 5 6 7 8 ON OFF	
	X229			
	X230			
	X231			
	X232		1 2 3 4 5 6 7 8 ON OFF	
	X233			
	X234			
	X235			
	X236		1 2 3 4 5 6 7 8 ON OFF	
	X237			
	X238			
	X239			
	X240		1 2 3 4 5 6 7 8 ON OFF	
	X241			
	X242			
	X243			
	X244		1 2 3 4 5 6 7 8 ON OFF	
	X245			
	X246			
	X247			
	X248		1 2 3 4 5 6 7 8 ON OFF	
	X249			
	X250			
	X251			
	X252		1 2 3 4 5 6 7 8 ON OFF	
	X253			
	X254			
	X255			

*DARKEN SIDE OF SWITCH (ON or OFF) TO BE DEPRESSED

Lower Nest			Upper Nest	
Module Nomenclature	Address	Slot Number	Module Nomenclature	Address
		1	PiC SUPPORT	
RS-232C*		2	COMPILER	
(not available on older PiC's)		3	(not available on older PiC's)	
D/A CONVERTER		4	CPU	
		5	8K CMOS	
		6	8K CMOS	
		7	PROG. CONSOLE	
		8	8K CMOS	
		9	8K CMOS	
		10	8K CMOS	
		11		
		12	DIGITIZING REFERENCE*	
		13		
		14		
		15	uP DIGITIZING*	
DC INPUT		16		
DC INPUT		17		
DC OUTPUT		18	uP DIGITIZING*	
DC OUTPUT		19		
AC INPUT		20		
AC INPUT		21	uP DIGITIZING*	
AC OUTPUT		22		
AC OUTPUT		23	VIDEO MEMORY	
(not available on older PiC's)		24	(not available on older PiC's)	
SCAN MONITOR		25	VIDEO INTERFACE	

* Three slots required if using faceplate.

FIGURE 2-2 RECOMMENDED MODULE PLACEMENT

40K CMOS

MODULE PLACEMENT WORKSHEET

Lower Nest			Upper Nest	
Module Nomenclature	Address	Slot Number	Module Nomenclature	Address
		1		
		2		
		3		
		4		
		5		
		6		
		7		
		8		
		9		
		10		
		11		
		12		
		13		
		14		
		15		
		16		
		17		
		18		
		19		
		20		
		21		
		22		
		23		
		24		
		25		

SECTION 3 - INSTALLATION

3.1 UNPACKING

The Programmable industrial Computer (PiC) and its associated hardware have been tested and carefully packed before shipment. When the equipment is received, the packing material should be removed and the equipment carefully inspected for damage. If any damage is discovered, notify both the carrier and the factory so that corrective action can be taken.

Check the contents of the shipment against the packing slip for accuracy. Do NOT remove any printed circuit boards from the anti-static bags at this time.

There are several different PiC rack configurations. The installation procedure for your PiC depends on the type of rack you are using. To determine which rack you have, look at the back of the unit and compare it with the drawings in Figure 3-1. Refer *only* to the sections that relate to your rack.

3.2 NEW STYLE PiC409 RACKS

G&L PiC409 racks built after December, 1985 will have an upper nest motherboard as illustrated in Figure 3-2. The expandable version contains circuitry that allows the rack to function as a Master Rack or as an Extension Rack for I/O modules. The non-expandable version does not contain this circuitry and is intended for use as a single rack system only.

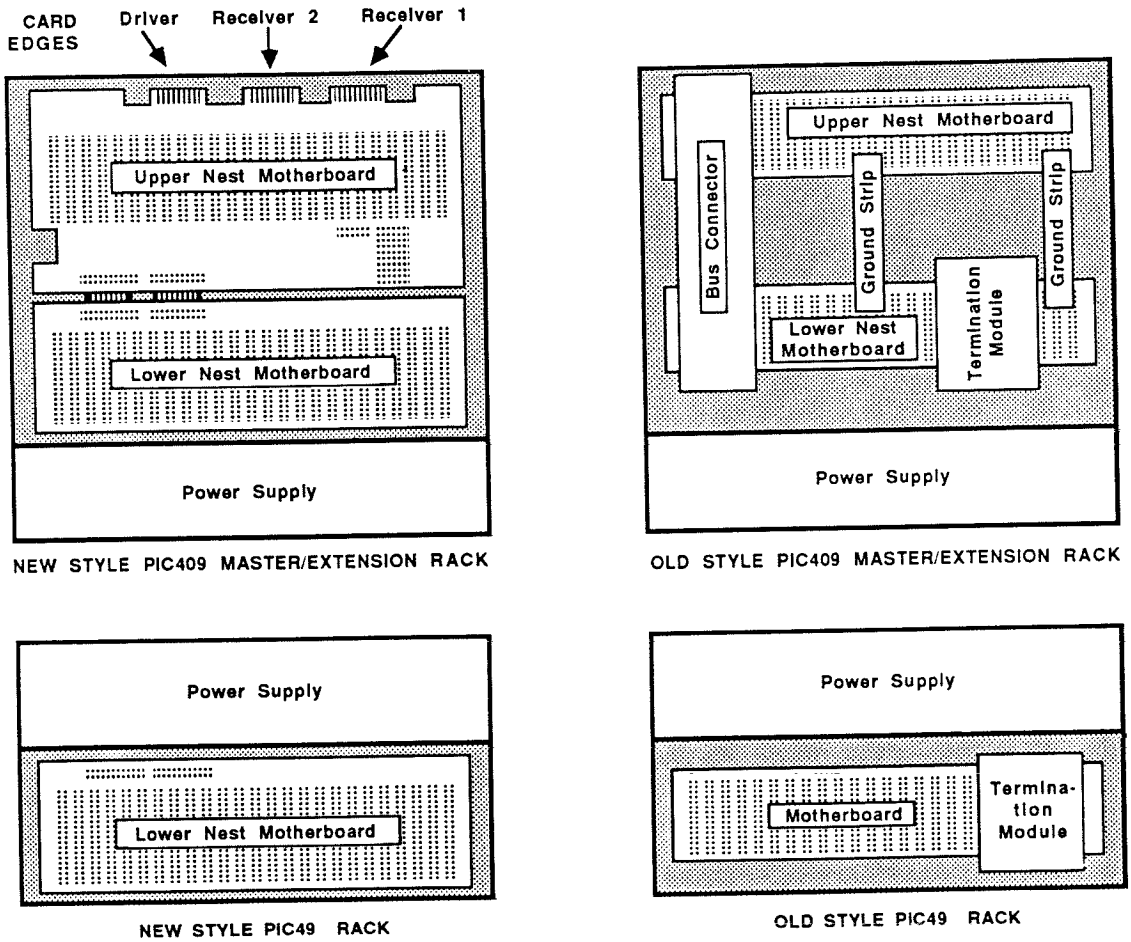

FIGURE 3-1 PiC409 AND PiC49 RACKS

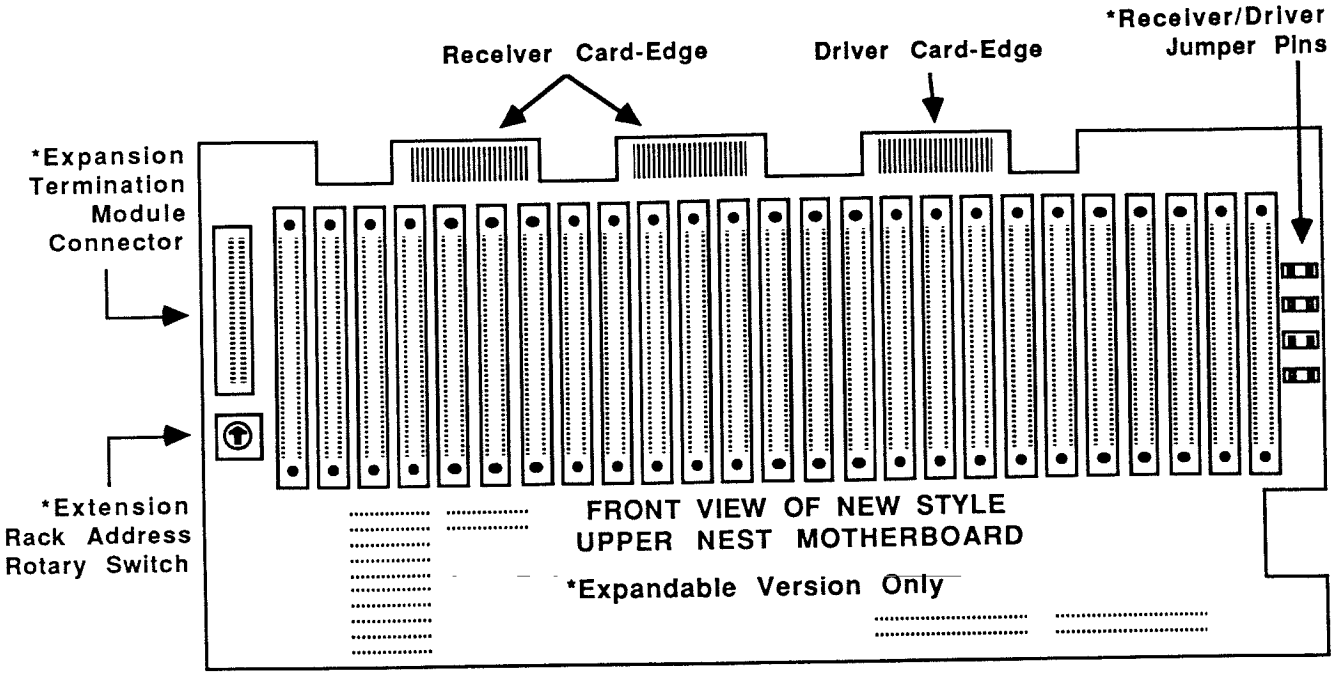

FIGURE 3-2 NEW STYLE PiC409 MOTHERBOARD

3.3 NEW STYLE MASTER RACK CONFIGURATION (Expandable Version)

This style rack may be used as a Master Rack for any type of PiC module or as an Extension Rack for I/O modules only. Although each PiC must have a Master Rack, only one rack per PiC can be used as the Master Rack. Using a small, flat blade screwdriver, set the rotary switch located to the left of the first slot on the upper nest motherboard to position zero (0). This designates the rack as the Master Rack.

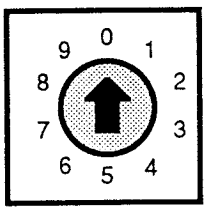

Set rotary switch to position zero for new style PiC409 Master Racks.

FIGURE 3-3 RACK SELECTION ROTARY SWITCH

3.3.1 CONTROL RELAY SIZE SELECTION

The user can select the size of the memory area used for control relays. Two thousand control relays are available using the standard PiC configuration. This configuration may be used with up to seven Extension Racks.

An additional 1,024 control relays (for a total of 3,024) may be obtained by designating the I/O addresses reserved for the last four Extension Racks as control relays instead. Another 768 control relays (for a total of 3,792) may be obtained by designating the I/O addresses for all Extension Racks as control relays.

The number of control relays available is determined by the position of the jumper located to the right of the last slot in the upper nest. Figure 3-4 shows the different jumper positions. Refer to Table 3-1 to determine which position to use.

Control Relays Available	Extension Racks Available	Jumper Position
2,000	1 through 7	NOR DRVR
3,024	1 through 3	OPT MAP DRVR
3,792	none	NO DRVR RECVR

TABLE 3-1 MASTER RACK JUMPER POSITIONS

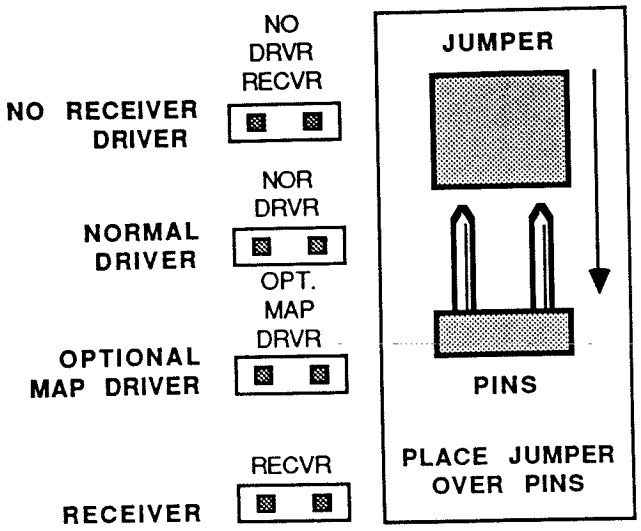

FIGURE 3-4 NEW STYLE RACK JUMPER POSITIONS

NOTE

The PiC Support Module must also be configured for the desired quantity of control relays. See the PiC Support Module description in Appendix A.

3.4 NEW STYLE EXTENSION RACK CONFIGURATION

To designate a rack as an Extension Rack, set the rotary switch on the upper nest motherboard to one of the positions designated in Figure 3-5. Only one Rack per extension is allowed.

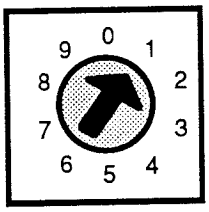

RACK NUMBER	ROTARY SWITCH POSITION
Master Rack	0
1st Extension	1
2nd Extension	2
3rd Extension	3
4th Extension	4
5th Extension	5
6th Extension	6
7th Extension	7
Not Used	8
Not Used	9

FIGURE 3-5 EXTENSION RACK ROTARY SWITCH POSITIONS

Position the jumper on the right side of the upper nest motherboard to the bottom (RECVR) position (see Figure 3-4). This designates this is an Extension Rack instead of the Master Rack.

3.4.1 EXPANSION TERMINATION MODULE

The last Extension Rack in the series must be terminated with an Expansion Termination Module. This module is not for use in any other rack in the series.

Insert the module into the connector to the left of the first slot in the upper nest. The module is keyed to prevent incorrect insertion. Removal is simply a matter of inserting your finger into the hole and pulling the module out.

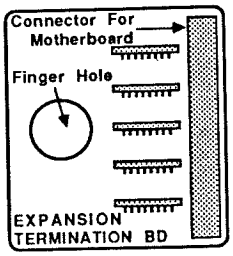

FIGURE 3-6 EXPANSION TERMINATION MODULE

3.5 INTERCONNECTING NEW STYLE MASTER AND EXTENSION RACKS

Racks are interconnected in "daisy chain" fashion by flat, 40-conductor cables. Cables in various lengths are available. Short cables should be used to connect racks that are stacked vertically. Longer cables are used to connect racks mounted side-by-side. There are three card edges at the top of the upper nest motherboard. If you are facing the back of a rack, the driver card edge will be on the left side. The remaining two connectors are receiver card edges used for Extension Racks.

On the Master Rack, attach one end of a cable to the card edge labeled DRIVER. Attach the other end of the cable to either one of the card edges labeled RECEIVER 1 or RECEIVER 2 on the first Extension Rack. Additional Extension Racks can be added to the system by connecting cables between the racks at the receiver card edges. The last Extension Rack in the series will have only one cable attached to it.

IMPORTANT

Keep the interconnecting cables away from all other wiring to prevent electrical interference.

3.6 OLD STYLE MASTER RACK CONFIGURATION

If Extension Racks are going to be used with the system, a Nest Driver Module must be attached to the Master Rack. Remove the Nest Driver Module from its anti-static bag and configure it for the desired number of control relays as indicated in Section 3.6.1. If you do not intend to use Extension Racks, the Nest Driver Module is not required.

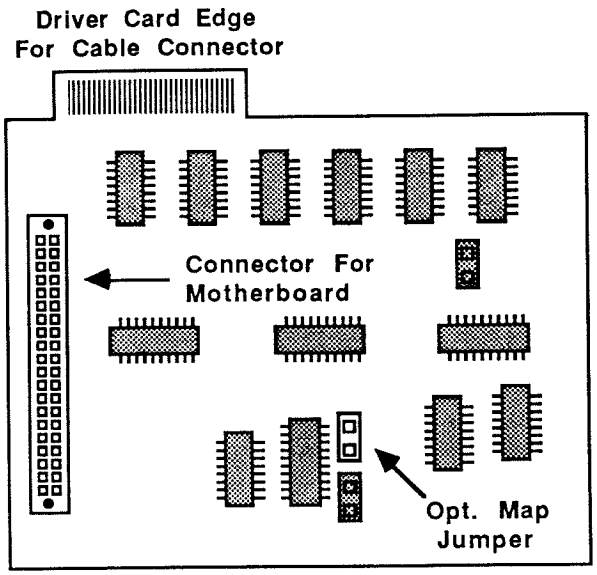

FIGURE 3-7 NEST DRIVER MODULE

3.6.1 CONTROL RELAY SIZE SELECTION

The user can select the size of the memory area used for control relays. Two thousand control relays are available using the standard PiC configuration. This configuration may be used with up to seven Extension Racks.

An additional 1,024 control relays (for a total of 3,024) may be obtained by designating the I/O addresses reserved for the last four Extension Racks as control relays instead. Another 768 control relays (for a total of 3,792) may be obtained by designating the I/O addresses for all Extension Racks as control relays.

If 2,000 control relays are desired, remove the OPT. MAP jumper from the Nest Driver module. All seven Extension Racks may then be utilized for I/O addresses.

If an additional 1,024 control relays are desired, place the OPT. MAP jumper in position on the module. Only the Master Rack and the first, second and third Extension Racks may be used for I/O addresses.

Do not install the Nest Driver Module if the entire complement of 3,792 control relays is desired. However, with this configuration, only the Master Rack may be used for I/O addresses.

Control Relays Available	Extension Racks Available	Driver Module Configuration
2,000	1 through 7	remove jumper
3,024	1 through 3	jumper in place
3,792	none	Do not use a Driver Module

TABLE 3-2 NEST DRIVER MODULE CONFIGURATION

NOTE

The PiC Support Module must also be configured for the desired quantity of control relays. See the PiC Support Module description in Appendix A.

Attach the Nest Driver Module to the back of the motherboard's upper nest. Use the built-in connector and the mounting hardware provided.

3.7 OLD STYLE EXTENSION RACK CONFIGURATION

Each Extension Rack requires a Nest Receiver Module. This module must be configured by the user before it can be attached to the PiC's lower nest motherboard. Remove the module from its anti-static bag and set it up as indicated in the following sections.

3.7.1 EXTENSION RACK ADDRESSING

Each Extension Rack must be assigned a unique set of addresses. Addressing of the Extension Racks is

accomplished by properly positioning the two jumpers on the Nest Receiver Module (Figure 3-8). An Extension Rack may be configured for one of seven groups of 256 I/O addresses or for one of 14 half groups of 128 I/O addresses.

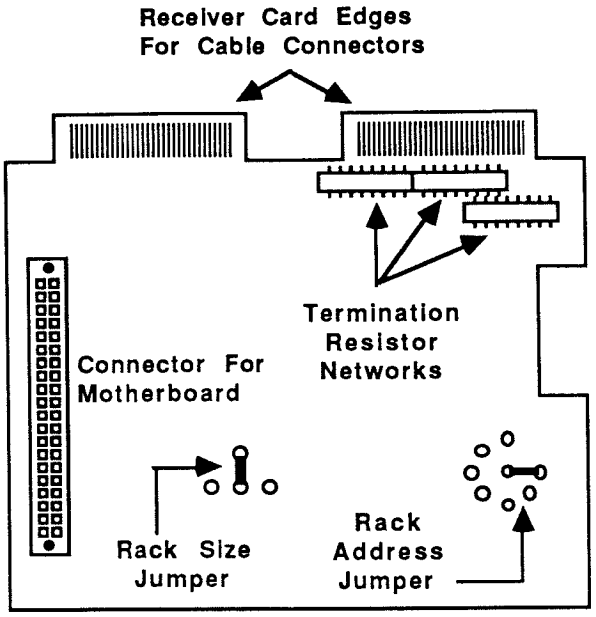

FIGURE 3-8 NEST RECEIVER MODULE

3.7.2 RACK ADDRESS JUMPER

The Rack Address Jumper can be placed in one of seven positions on the Nest Receiver Module (Figure 3-8). Each position corresponds to a group of 256 addresses as indicated in Table 3-3. The first digit of the PiC address is determined by the position of the Rack Address Jumper.

3.7.3 RACK SIZE JUMPER

The Rack Size Jumper can be placed in one of three positions on the Nest Receiver Module. The "256" position assigns an entire block of 256 addresses to the rack, allowing the rack to electrically accommodate a total of 256 inputs and/or outputs.

If the use of faceplates and low-density circuit modules (such as the 3-Amp DC Output Module) requires much physical space, two racks of 128 inputs/outputs each may be configured to simulate one 256 address rack. In these cases, the Rack Size Jumper is set to L128 (lower 128 addresses) on one rack and U128 (upper 128 addresses) on the other.

Rack	Rack Address Jumper	Rack Size Jumper	PIC Addresses	Maximum I/O Per Rack
Master Rack			2000-2239	240
1st Extension	E	L128	3000-3127	128
	E	U128	3128-3255	128
	E	256	3000-3255	256
2nd Extension	D	L128	4000-4127	128
	D	U128	4128-4255	128
	D	256	4000-4255	256
3rd Extension	C	L128	5000-5127	128
	C	U128	5128-5255	128
	C	256	5000-4255	256
4th Extension	B	L128	6000-6127	128
	B	U128	6128-6255	128
	B	256	6000-6255	256
5th Extension	A	L128	7000-7127	128
	A	U128	7128-7255	128
	A	256	7000-7255	256
6th Extension	9	L128	8000-8127	128
	9	U128	8128-8255	128
	9	256	8000-8255	256
7th Extension	8	L128	9000-9127	128
	8	U128	9128-9255	128
	8	256	9000-9255	256

TABLE 3-3 RACK EXTENSION SELECTION TABLE

3.7.4 TERMINATION RESISTOR NETWORKS

Termination Resistor Networks have been inserted into the three sockets located on the Nest Receiver Module (See Figure 3-8). These networks must be present only in the last Extension Rack. Remove the networks from the Nest Receiver Modules on all Extension Racks between the last rack and the Master Rack. Use a small screwdriver to gently pry the resistor networks from their sockets.

After setting the two rack jumpers to the proper positions and removing the Termination Resistor Networks (if required) attach the Nest Receiver Module to the lower rack motherboard using the built-in connector and the mounting hardware provided.

3.8 TERMINATION MODULE

The Termination Module is mounted to the lower nest motherboard of the Master and Extension Racks. The circuitry on the module improves system reliability by terminating the bus signals with the correct impedance. This module requires no adjustments.

3.9 INTERCONNECTING OLD STYLE RACKS

Racks are interconnected in "daisy chain" fashion by flat, 40-conductor cables. Cables in various lengths are available. Short cables should be used to connect racks that are stacked vertically. Longer cables are used to connect racks mounted side-by-side.

On the Master Rack, attach one end of a cable to the card edge on the Nest Driver Module. Attach the other end of the cable to either one of the two card edges on the Nest Receiver Module located on the first Extension Rack.

Additional Extension Racks can be connected to the system by attaching cables between the racks using the card edges on the Nest Receiver Modules. The last Extension Rack in the series will have only one cable attached to it.

IMPORTANT

Keep the interconnecting cables away from all other wiring to prevent electrical interference.

3.10 INTERCONNECTING NEW AND OLD STYLE MASTER AND EXTENSION RACKS

New and old style Master and Extension Racks are completely compatible and may be used interchangeably. Connect the 40 conductor interconnecting cables to the appropriate driver or receiver card edges as described in the sections for each rack.

IMPORTANT

Keep the interconnecting cables away from all other wiring to prevent electrical interference.

3.11 PiC49 RACK CONFIGURATION

These racks are non-expandable and require no special configuration by the user.

3-12 PRIMARY AC POWER

All PiC systems should be isolated from incoming AC lines by the use of a control transformer (to isolate the grounds) and a noise filter. G&L specifies the use of a .5 KVA or larger control transformer and an Islatrol® filter[1] model I-115/U (G&L Part. Number 401-53038-00). Figures 3-9 and 3-17 show the typical connections for a control transformer and noise filter.

Mount these items in the same cabinet as the Master Rack. This cabinet is also referred to in this manual as the magnetics cabinet. The Islatrol filter must be no further than one foot from the single point ground which must also be in the same cabinet.

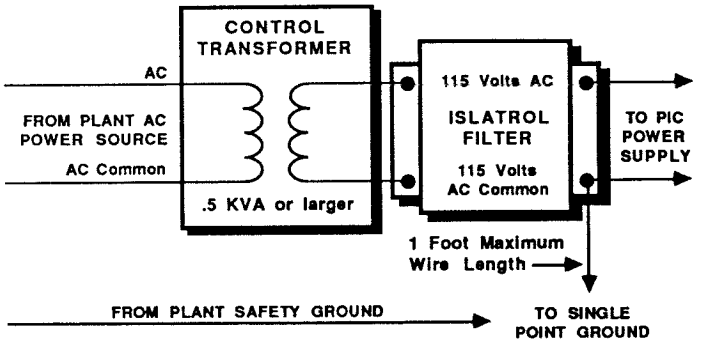

FIGURE 3-9 CONTROL TRANSFORMER AND ISLATROL FILTER

IMPORTANT

To insure proper grounding, most ground connections are made at the system's single point ground. This includes the grounding of the AC power for the PiC racks. The single point ground is described in detail in Section 3-18. Before doing any wiring, read that section and install a single point ground tie block within one foot of Islatrol filter output.

If the quality of the line voltage is inadequate (sags or surges outside ±10% windows), the PiC power supplies should be isolated by the use of a motor generator set.

[1]Islatrol is a registered trademark of Control Concepts Corporation.

3.13 MAIN DISCONNECT SWITCH

Primary 115 Volt AC power from the control transformer and filter to the PiC Power Supply, the user furnished +24 volt DC power supply and the AC power supplied to the AC I/O modules, should originate from a main disconnect switch. A main disconnect switch will insure that electrical power to all PiC system devices will be removed if power to the PiC is intentionally or unintentionally eliminated.

3.14 PiC49 RACK POWER CONNECTIONS

These racks have a built-in power supply. Use a #16 shielded, three-conductor (black, white and green) cable for the AC power connections. A #10 white/green wire is also required.

Use the following steps to connect AC power to the six-terminal barrier strip located in the back of the power supply compartment. Loosen the two thumbscrews at the top of the rack and raise the top cover to expose the barrier strip. See Figure 3-10. Figure 3-11 illustrates the wiring for the six terminal rack barrier strip.

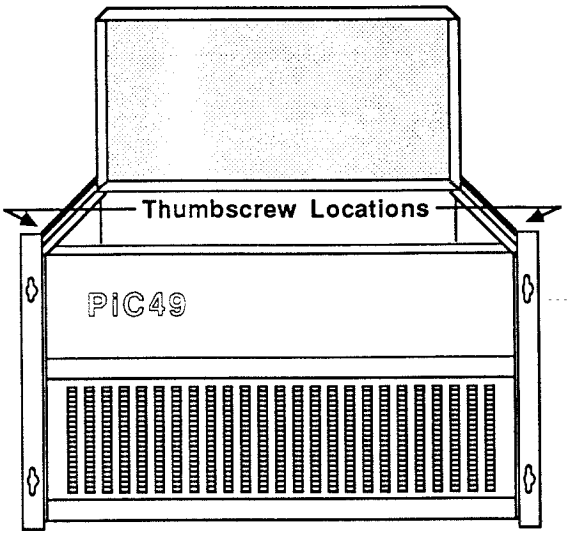

Loosen thumbscrews and raise cover to expose barrier strip.

FIGURE 3-10 OPENING THE PiC49 POWER SUPPLY COMPARTMENT

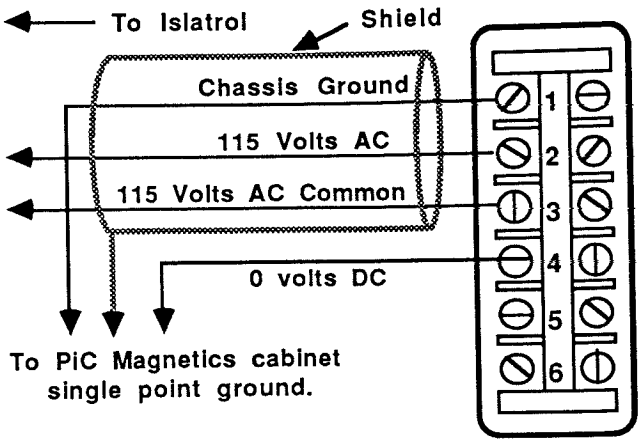

FIGURE 3-11 AC WIRING FOR PiC49 RACKS

1. Use the green conductor in the power cable to connect terminal 1 on the barrier strip to the single point ground.
2. Use the black conductor to connect terminal 2 to the 115 volt AC connection on the Islatrol filter.
3. Use the white conductor to connect terminal 3 to the 115 volt AC Common connection on the Islatrol filter.
4. Connect the #10 white/green wire from terminal 4 to the single point ground.
5. Connect one end of the shield drain wire (or the shield itself) to the single point ground. Leave the other end of the shield unconnected.
6. Connect a #10 white wire from the 115 volt AC Common connection on the Islatrol filter to the single point ground in your PiC magnetics cabinet. This wire must be no longer than one foot in length.

No additional power wiring is required. Close the top cover and secure it by tightening the thumbscrews.

3.15 PiC409 RACK AC POWER CONNECTIONS (racks with built-in power supply)

These racks have a built-in power supply. Use a #16 shielded, three-conductor (black, white and green) cable for the AC power connections. A #10 white/green wire is also required.

Your rack will have either a ten-terminal or an eight-terminal barrier strip for the power connections. To expose the barrier strip, Remove the two screws under the power supply enclosure and slide the enclosure out of the rack. See Figure 3-12.

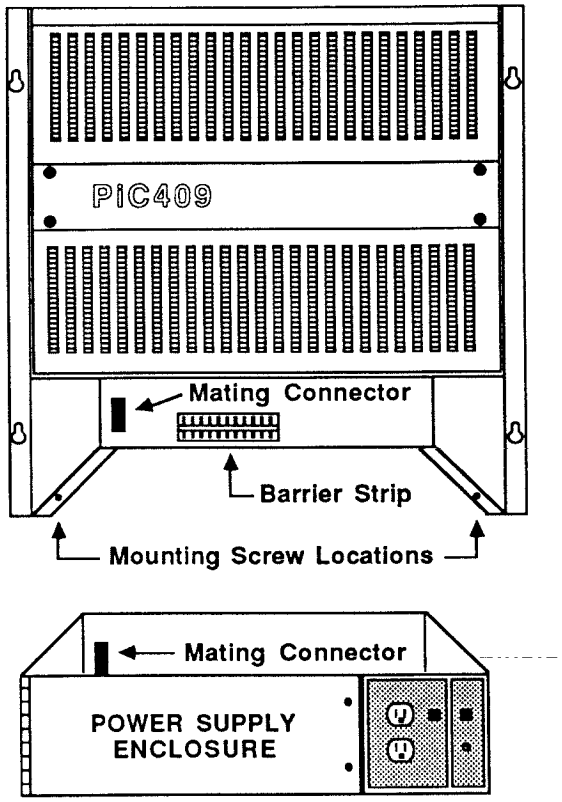

To expose barrier strip, remove mounting screws and slide power supply enclosure out of rack.

FIGURE 3-12 REMOVING THE PiC409 POWER SUPPLY ENCLOSURE

Use the following steps to connect AC power to the barrier strip. Figure 3-13 illustrates the wiring for the barrier strip.

1. Connect the #10 white/green wire from terminal 1 to the single point ground.
2. Use the green conductor in the power cable to connect terminal 2 on the barrier strip to the single point ground.
3. Use the white conductor in the power cable to connect terminal 3 to the 115 volt AC Common connection on the Islatrol filter.
4. Use the black conductor to connect terminal 4 to the 115 volt AC connection on the Islatrol filter.
5. Connect one end of the shield drain wire (or the shield itself) to the single point ground. Leave the other end of the shield unconnected.
6. Connect a #10 white wire from the 115 volt AC Common connection on the Islatrol filter to the single point ground in your PiC magnetics cabinet. This wire must be no longer than one foot in length.

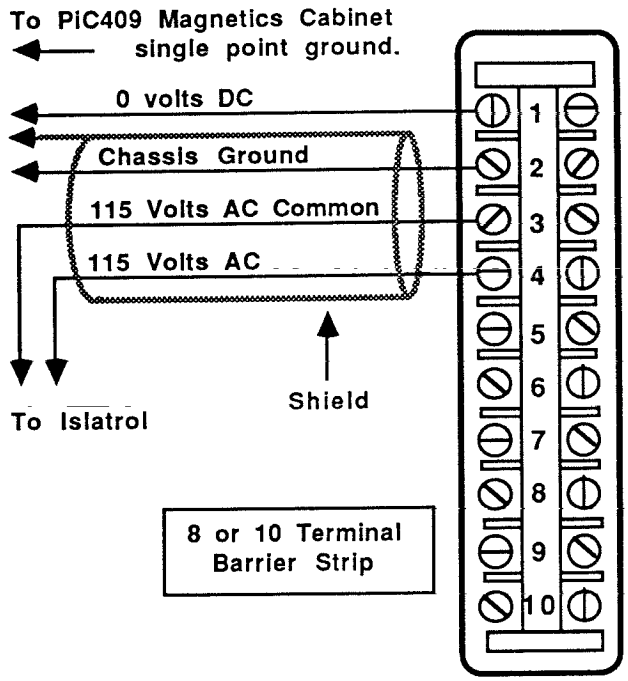

FIGURE 3-13 AC WIRING FOR PiC409 RACKS (racks with built-in power supply)

No additional power wiring is required. DC power is routed to the rack through the mating connectors located in the rear of the power supply enclosure and the rack. Slide the power supply enclosure back into its original position and secure it with the two screws you removed earlier.

3.16 PiC409 RACK POWER CONNECTIONS (old style racks with external power supplies)

If you are supplying your own external power supply for the PiC, wire the AC input connections in accordance with the instructions provided by the power supply manufacturer.

Master Racks used with external power supplies require the following DC voltage sources.

+5 volts DC at 12 Amps
+15 volts DC at 1.5 Amps
-15 volts DC at 1.5 Amps

Your rack will have either a ten-terminal or an eight-terminal barrier strip for the DC power connections. To expose the barrier strip, Remove the screws holding the front cover plate and remove the plate from the rack. See Figure 3-14.

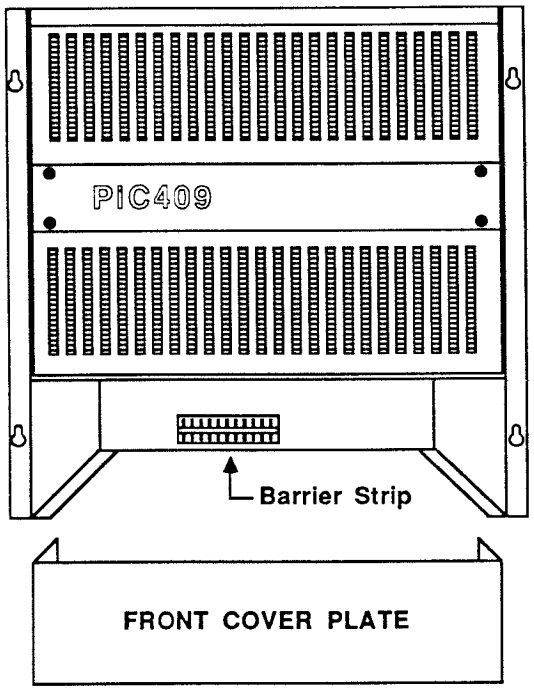

To expose barrier strip, remove screws holding the cover plate and remove the plate from rack.

FIGURE 3-14 REMOVING THE PiC409 FRONT COVER PLATE (old style racks without built-in power supply)

3.16.1 DC POWER FOR MASTER RACKS WITH TEN-TERMINAL BARRIER STRIPS

1. Connect a twisted pair of #14 stranded wires for the +5 volt DC supply. Use a blue wire from +5 volts DC to terminal 7 on the barrier strip and a white/green wire from 0 volts DC to terminal 8.
2. Connect a #10 white wire from the 115 volt AC Common connection on the Islatrol filter to the single point ground in your PiC magnetics cabinet. This wire must be no longer than one foot in length.
3. Connect a #16 blue wire from +15 volts DC to terminal 9.
4. Connect a #16 blue wire from -15 volts DC to terminal 10.

Figure 3-15 illustrates the correct wiring for the barrier strip.

Replace the front cover plate. No additional power wiring is required.

3.16.2 DC POWER FOR MASTER RACKS WITH EIGHT-TERMINAL BARRIER STRIPS

1. Connect a twisted pair of #14 stranded wires for the +5 volt DC supply. Use a blue wire from +5 volts DC to terminal 5 on the barrier strip and a white/green wire from 0 volts DC to terminal 6.
2. Connect a #10 white wire from the 115 volt AC Common connection on the Islatrol filter to the single point ground in your PiC magnetics cabinet. This wire must be no longer than one foot in length.
3. Connect a #16 blue wire from +15 volts DC to terminal 7.
4. Connect a #16 blue wire from -15 volts DC to terminal 8.

Figure 3-15 illustrates the correct wiring for the barrier strip.

Replace the front cover plate. No additional power wiring is required.

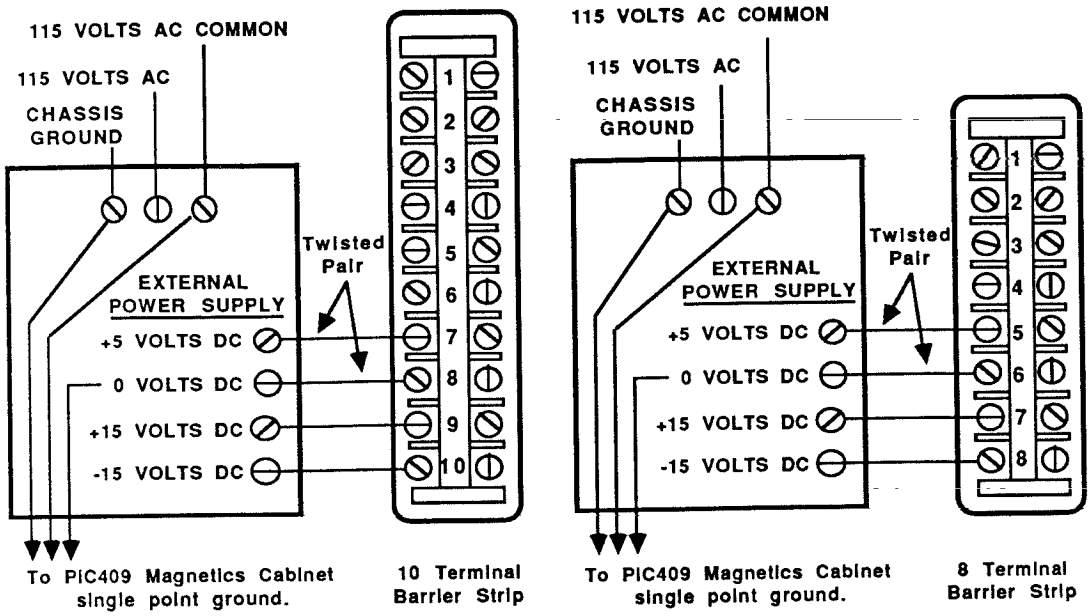

FIGURE 3-15 DC WIRING FOR MASTER RACKS (old style racks without built-in power supply)

3.17 EXTENSION RACKS WITHOUT BUILT-IN POWER SUPPLIES

When using an Extension Rack without a built-in power supply, a single source of +5 volts DC must be provided.

Use a single twisted pair of #14 stranded wire for the DC power connections.

Your rack will have either a ten-terminal or an eight-terminal barrier strip for the DC power connections. To expose the barrier strip, Remove the screws holding the front cover plate and remove the plate from the rack. See Figure 3-14.

If the Extension Rack barrier strip has ten terminals, connect a blue wire from +5 volts DC to terminal 7 and a white/green wire from 0 volts DC to terminal 8.

If the barrier strip has eight terminals, connect a blue wire from +5 volts DC to terminal 5 and a white/green wire from 0 volts DC to terminal 6.

NOTE

If the Master Rack has a built-in power supply the +5 volts DC and 0 volts DC for the Extension Racks may come from the barrier strip on the Master Rack instead of an additional power supply (see the diagram in Figure 3-16). However, refer to the PiC409 and PiC49 Module Current Requirements sheet in Appendix A to insure that the built-in power supply is adequate for your needs.

When using a Master Rack without a built-in power supply, connect any Extension Racks directly to the +5 volt DC and 0 volt DC source on the external power supply.

Connect additional Extension Racks to the same +5 volts DC supply, using separate wires from the power supply to each rack. The "star" or radial pattern, similar to the spokes of a wheel, should be used in place of a pattern in which the racks are chained in series.

Replace the front cover plates on each rack when finished. No additional power wiring is required.

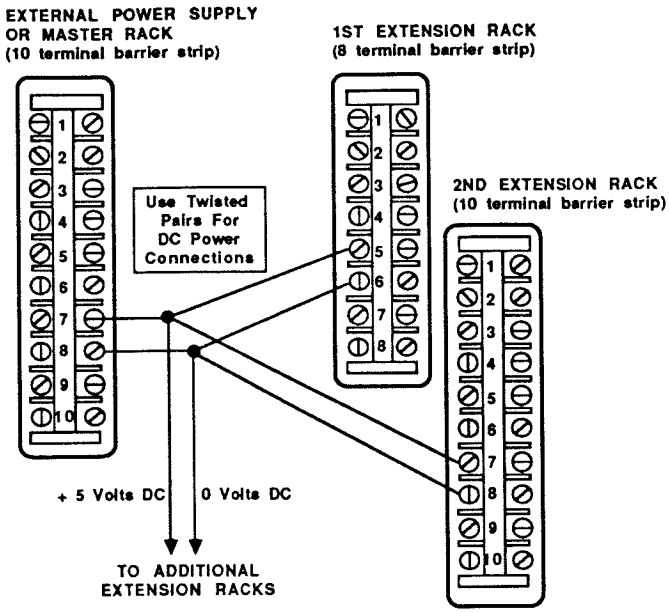

	RACKS WITH 10-TERMINAL BARRIER STRIPS	RACKS WITH 8-TERMINAL BARRIER STRIPS
+5 VOLTS DC	Terminal 7	Terminal 5
0 VOLTS DC	Terminal 8	Terminal 6

FIGURE 3-16 DC POWER FOR EXTENSION RACKS (old style racks without built-in power supply)

IMPORTANT

The PiC409 and PiC49 are both designed to provide high performance and reliability in industrial environments. However, as with any type of computer equipment, proper grounding, shielding and noise suppression are essential for reliable operation of the PiC. The following sections contain important information that will help you install your system properly. Following these instructions will eliminate many of the interference problems that typically exist in industrial environments.

If you have difficulty meeting these requirements or if problems do occur despite your efforts, please consult the factory. Failure to follow these instructions may result in incorrect data which can affect the reliability of the system.

3.18 SINGLE POINT GROUND

A single point ground is required for proper grounding. This should be a tie block located in the same cabinet that contains the control transformer, the Islatrol filter and the Master Rack. This cabinet is also referred to as the magnetics cabinet.

The single point ground tie block should be made of brass or copper. It must be welded or bolted securely to the inside of your magnetics cabinet no farther than one foot from the Islatrol filter. Fasten this lug using the following guidelines.

1. The single point ground must be located no further than one foot from the Islatrol filter.
2. Scrape the paint off of the panel in the magnetics cabinet where the block is to be fastened. This assures good electrical contact with the cabinet.
3. Use star washers directly on the panel when bolting the block. This also helps to provide good electrical contact.

3.18.1 GROUND PATHS

Three separate ground paths should be incorporated in the packaging of the control.

1. DC Common or Logic Ground (white wire with green stripe). This is the 0 volts DC bus.
2. 115 volts AC, 1 phase common (white wire).
3. Chassis Ground (green Wire).

The following items should be connected at the single point ground.

1. Plant safety ground (#16 green conductor).
2. 115 volt AC common output of the Islatrol filter (#10 white conductor).
3. The shield (or shield drain wire) for the 115 volt power cable between the Islatrol filter and the PiC power supply. Connect only the end of the shield located closest to the control transformer.
4. 0 volt DC terminal on the PiC barrier strip (#10 wire/green conductor).
5. Chassis ground terminal on the PiC barrier strip (#16 green conductor).
6. DC common from the power supply used for the 24 or 15 volt DC I/O modules (#16 white/green conductor).

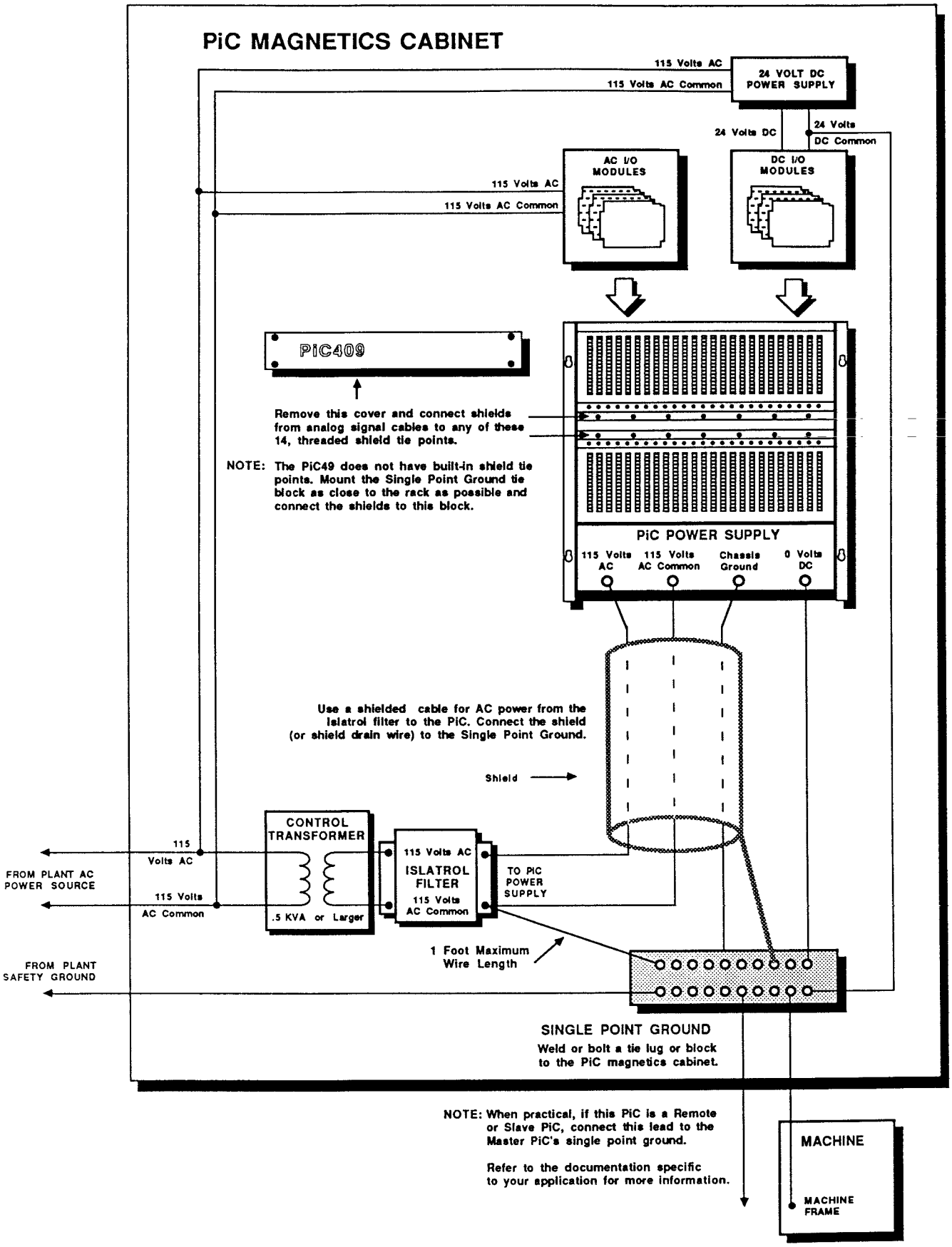

FIGURE 3-17 TYPICAL SINGLE POINT GROUND CONNECTIONS

7. The chassis ground terminal on any Extension Racks (#16 green conductor).
8. The single point grounds from remote or slave PiC's used as part of the same system (#10 white conductor. Refer to the documentation specific to your application for additional information).
9. The chassis of any machine, motor drive or other equipment connected to the PiC (#16 green conductor).

Refer to the Figure 3-17 and Figure 3-18 when making ground connections.

IMPORTANT

DC Common, Chassis Ground and AC Common should remain isolated from each other throughout the rack, power supply enclosure and on the machine. These three ground paths should only be connected together at the single point ground in the PiC magnetics cabinet.

3.18.2 EQUIPMENT AND CHASSIS GROUND

1. All equipment housings, frames, panels and doors should be grounded to the magnetics cabinet. Hinges are not acceptable as ground connections unless stainless steel or brass metal is used as a hinge rod.
2. The chassis ground for the power supply enclosure should be connected to the single point ground.
3. The chassis of the Master Rack and any Extension Racks in the same magnetics cabinet should be attached to the magnetics cabinet by the use of star washers.
4. The chassis of any remote Extension Rack should be grounded at the single point ground in the Master Rack's magnetics cabinet.
5. Peripheral components such as control transformers, programming terminals, magnetic tape readers, personal computers, etc. should also have their chassis grounded at the single point ground.

3.18.3 GROUNDING METHODS

1. Panels may be grounded with enclosure studs provided any paint is removed from the stud flange and around each hole on both sides of the panel. Star washers should be inserted between the panel and the hold-down nut. This is the most desirable method.
2. Ring lugged washers may be used provided the paint is removed from the panel and star washers are used directly on the panel surface.
3. Grounding straps may be used provided any paint is removed from both termination ends, and star washers are used between the strap and hold-down bolts.

3.19 SHIELDING AND NOISE

Electrical noise is an unwanted signal. Shielding is the protection of signal wires from noise. Electrical noise is introduced into signal wires through electrostatic (capacitative) coupling, magnetic (inductive) coupling and resistive coupling.

The reduction of these disturbances is accomplished by the use of shielding, twisted pairs, coaxial cables, proper grounding and separation.

Some of the signals associated with a PiC are:

1. 115 Volt AC wiring, such as connections to solid state relays, starter/relay coils, solenoid valves, transformers, video monitors and other peripheral devices. These signals generally create noise that interferes with other signals.
2. 24 volt DC wiring to display lights and machine devices such as limit switches, pressure switches and float switches.
3. Analog signals (AC or DC) to feedback devices such as sliders, scales and resolvers. These are low level signals which are very noise susceptible.

To prevent these signals from interfering with one another, the following methods for routing signal cable must be followed.

1. All power wiring (115 volts AC) should be separated from DC wiring within the enclosure. Do not run AC and DC cables side by side.
2. When running cables outside of the enclosure, use separate cables for each type of signal. NEVER RUN AC, DC OR ANALOG SIGNALS IN THE SAME CABLE OR CONDUIT.

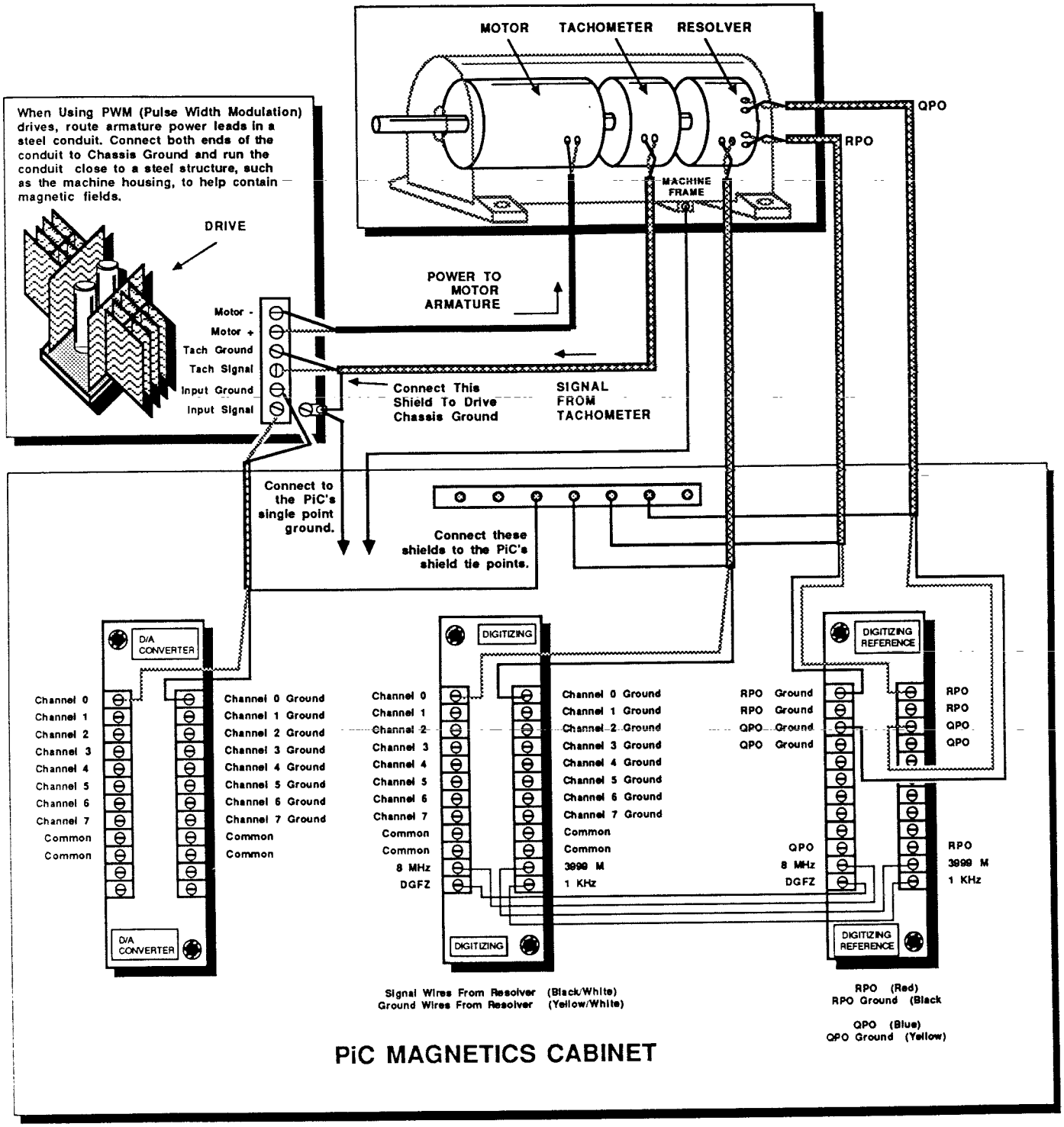

IMPORTANT!

Keep ALL analog signal leads from Resolvers, Tachometers, D/A Module,etc. physically separated from the motor leads and AC wiring.

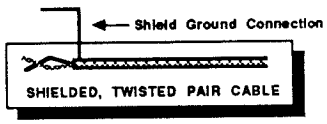

Use shielded, twisted pair cables for these signal leads. Ground the shields as indicated in the Illustration.

FIGURE 3-18 TYPICAL CONNECTIONS FOR ANALOG CABLE SHIELDS

3. Analog signals (for encoders, scales, sliders, etc.) should be routed in shielded cables. The shields for these cables should be grounded as indicated in Section 3.19.1. and Figure 3-18.

IMPORTANT

No arc welding equipment or cables for such equipment should be used within 10 feet of the PiC hardware.

3.19.1 GROUNDING CABLE SHIELDS

All cable shields, with the exception of the shields for the power leads described in the next paragraph, should terminate at the PiC shield tie points on the Master Rack. UNDER NO CIRCUMSTANCES SHOULD THE SHIELD DRAIN WIRE BE USED AS A SIGNAL WIRE OR CURRENT CARRYING CONDUCTOR.

Cables that are a source of radiation, such as power leads for a high frequency welder or PWM (pulse width modulation) motor, should be shielded with a continuous iron or steel conductor (foil wrap or conduit). Ground the shields at both ends of the cable to the equipment the cable is connected to .

3.20 SIGNAL ISOLATION

All signal interface lines between the PiC and electrical drives should be isolated via differential or isolated inputs. Use drives with built-in isolation or add optical isolators between the signal lines and the PiC.

3.21 ELECTRICAL FILTERS

All lines to external devices controlled from the PiC should be equipped with electrical filters for arc suppression. Figures 3-19 and 3-20 illustrate the recommended filtering.

1. All motors should be arc suppressed at the motor starters as shown in Figure 3-19.
2. 115 volt AC coils, solenoids, etc. do not have to be suppressed unless a contact is placed between the coil and the AC Output Module. Refer to Figure 3-20.

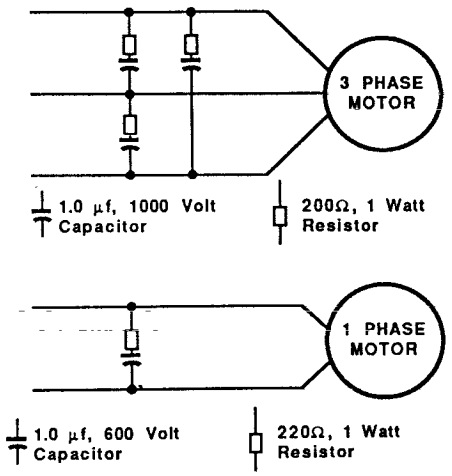

FIGURE 3-19 AC MOTOR ARC SUPPRESSION

3. DC outputs must be suppressed by use of a diode. Refer to Figure 3-20. If dropout time is critical in an application, a metal oxide varistor (MOV) should be used for DC output arc suppression in place of the diode. The metal oxide varistor should be rated at 50V or less.

IMPORTANT

Arc suppression on DC outputs is essential to avoid long-range damage to DC output modules.

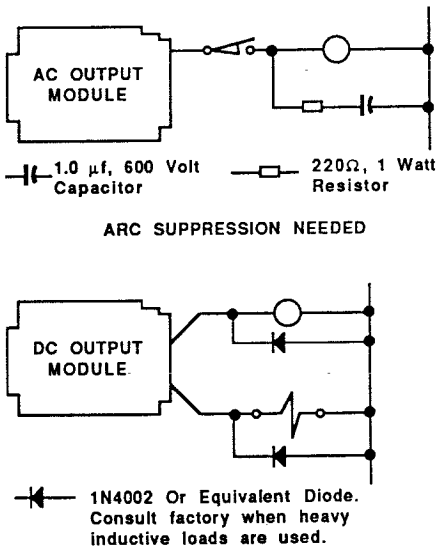

FIGURE 3-20 DEVICE ARC SUPPRESSION

3-22 MOUNTING

G&L PiC racks should be mounted on a rigid, vertical surface, protected from corrosive or explosive atmospheres and conductive fluids and particles. A NEMA 12 enclosure is strongly recommended. Mounting dimensions for the PiC409 and PiC49 racks are supplied in Figure 3-21.

These racks are cooled by convective air flow. Do not place auxiliary devices in a position where these devices would impede the free air flow over the PiC or power supply. The operating environment must be kept within the following limits.

Operating Temperature: 7° to 55° C, 45° to 130° F

Relative Humidity: 15% to 95%, Non-condensing

If the temperatures in the cabinet are expected to exceed 55° C (130° F), fans, heat exchangers or air conditioner should be used. If you have difficulty meeting any of these requirements, please consult the factory.

A fan assembly that mounts to the bottom of PiC409 racks produced during or after June of 1986 is available from G&L. The part number for this dual fan device is 502-03451-00.

IMPORTANT

Failure to observe these requirements may result in short circuits and the subsequent failure of the system.

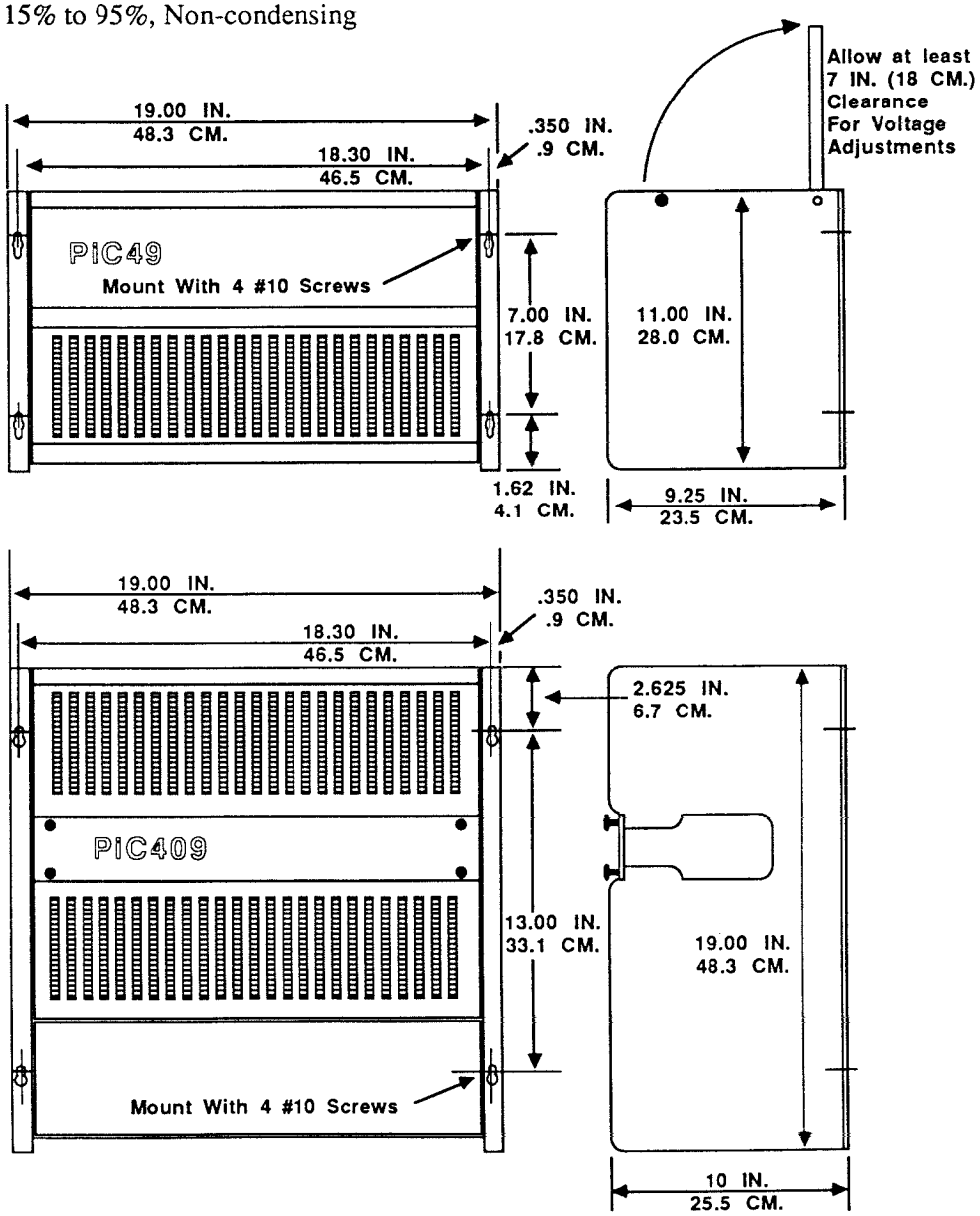

FIGURE 3-21 PiC RACK DIMENSIONS

SECTION 4 - FUNCTION OF CONTROLS

4.1 INTRODUCTION

This section describes the basic devices used to control and monitor PiC operation. In addition to the devices described in this section, various types of peripherals may be connected to the PiC. Descriptions of the various types of peripherals are provided in APPENDIX C, APPENDIX D, APPENDIX E and APPENDIX F.

4.2 PiC CONTROL PANEL

The PiC Control Panel provides the basic control devices required to control and monitor PiC operation. Two sockets, located on the rear of the PiC Control Panel, are provided to mount the PiC Control Panel onto the front-edge connectors of the PiC Support Module and the Programmer's Console Module. The PiC Support module must be inserted six slots to the left of the Programmer's Console Module to facilitate mounting of the PiC Control Panel. Normally, the PiC Control is installed in the upper left corner of the master rack. This is accomplished by inserting the PiC Support Module into slot 1 and the Programmer's Console Module into slot 7. The five slots between the PiC Support Module and the Programmer's Console Module must either be empty or have modules without front-edge connectors inserted.

A program called CPOS (Control Panel Operating System), which is stored in EPROM on the 6809 CPU Module, defines the operation of the PiC Control Panel. Normally, the RESTART ADDRESS Switches on the 6809 CPU MODULE should be set to the starting address of CPOS. If CPOS is selected by the AUTO STARTUP Switches, the start-up diagnostics will be executed immediately

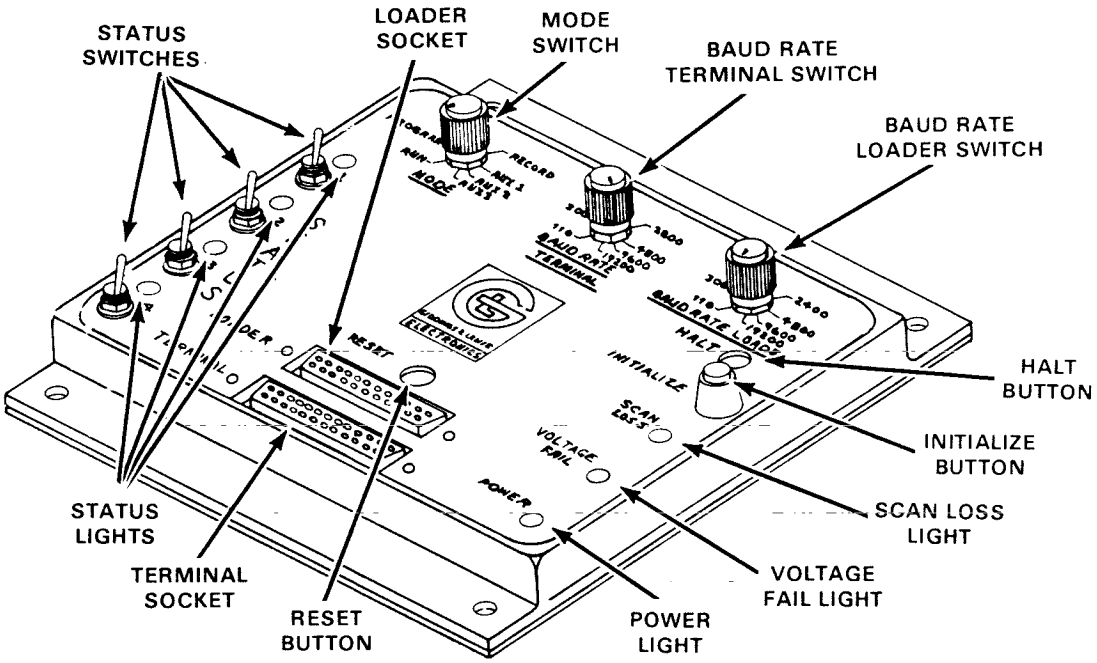

FIGURE 4-1 PiC CONTROL PANEL

following a power-on or reset condition. Following satisfactory completion of the start-up diagnostics, CPOS will become active to enable use of the PiC Control Panel. Setting the RESTART ADDRESS Switches is described in the 6809 CPU Module Instruction Sheet, located in APPENDIX A.

The function of each button, switch, indicator and socket on the PiC Control Panel is described in the paragraph referenced by FIGURE 4-1.

4.2.1 Mode Switch

The MODE Switch is used to select the mode of operation in which the PiC will operate. The mode of operation selected determines what activities the PiC can perform. Eight modes of operation are available as represented by the eight positions on the MODE Switch. STATUS Light 1 will blink whenever a different mode is selected. Momentarily depressing the INITIALIZE Button will extinguish STATUS Light 1. When STATUS Light 1 is extinguished, the selected mode will be active.

NOTE

On newer PiC's the mode of operation can be selected by remote control using a programming terminal. See Section 4.2.1.6 (Aux 1).

4.2.1.1 PiC Run - The PiC Run Mode is activated by placing the MODE Switch in the PiC RUN Position, followed by momentarily depressing the INITIALIZE Button. In the PiC Run Mode, the Ladder Diagram Network (LDN) will be scanned (executed). The PiC Run Mode is not active if the SCAN LOSS Light is illuminated (see SECTION 4.2.6).

NOTE

If the PiC RUN position was selected prior to a power-on or reset condition, the PiC Run Mode will become active following execution of the start-up diagnostics. If a position other than PiC RUN (or AUX 1) was selected prior to a power-on or reset condition, STATUS Light 1 will blink following execution of the start-up diagnostics. When STATUS Light 1 is blinking, momentarily depressing the INITIALIZE Button will activate the selected mode.

4.2.1.2 Program - The Program Mode is activated by placing the MODE Switch in the PROGRAM position, followed by momentarily depressing the INITIALIZE Button. A terminal must be connected to the TERMINAL Socket to implement Program Mode operation. In the Program Mode, the LDN may be examined, entered and edited using the terminal. The following message will be displayed on the terminal to indicate that the Program Mode is active:

PiC409 COMPILER VER XX.XX
(C) (date) GIDDINGS & LEWIS

Program Mode operation is implemented internally with a program called the LDN Compiler. The COMPILER VER (version) number in the previous massage should be noted prior to discussing Program Mode operation with a Giddings & Lewis Service Representative.

4.2.1.3 Load - The Load Mode is activated by placing the MODE Switch in the LOAD position, followed by momentarily depressing the INITIALIZE Button. A loader must be connected to the LOADER Socket to implement Load Mode operation. In the Load Mode, data will be loaded into user memory

from the tape mounted in the loader. The status of the loading process is indicated by the four STATUS Lights as described in SECTION 4.2.13.

4.2.1.4 Verify - The Verify Mode is activated by placing the MODE Switch in the VERIFY position, followed by momentarily depressing the INITIALIZE Button. A loader must be connected to the LOADER Socket to implement Verify Mode operation. In the Verify Mode, the data in user memory will be compared to the data on the tape currently mounted in the loader. The status of the verify process is indicated by the four STATUS Lights as described in SECTION 4.2.13.

4.2.1.5 Record - The Record Mode is activated by placing the MODE Switch in the RECORD position, followed by momentarily depressing the INITIALIZE Button. A loader must be connected to the LOADER Socket to implement Record Model operation. Following entry to the Record Mode, the data in user memory will be recorded onto the tape mounted in the loader. The status of the recording process is indicated by the four STATUS Lights as described in SECTION 4.2.13.

4.2.1.6 Aux 1 - The Aux 1 Mode is activated by placing the MODE switch in the AUX 1 position, followed by momentarily depressing the INITIALIZE button. A terminal must be connected to the TERMINAL Socket to implement Aux 1 Mode operation. In the Aux 1 Mode, the terminal will provide remote control of the different Mode selections. Upon entering this mode, a menu will appear with the different choices. Refer to the AUX 1 supplement supplied with your PiC modules for detailed documentation.

NOTE

If the PiC Aux 1 position was selected prior to a power-on or reset condition, the Aux 1 Mode (or the mode selected in the Aux 1 Mode) will become active following execution of the start-up diagnostics. If a position other than Aux 1 (or PiC RUN) was selected prior to a power-on or reset condition, STATUS Light 1 will blink following execution of the start-up diagnostics. When STATUS Light 1 is blinking, momentarily depressing the INITIALIZE Button will activate the selected mode.

4.2.1.7 Aux 2 - The Aux 2 Mode is activated by placing the MODE Switch in the AUX 2 position, followed by momentarily depressing the INITIALIZE Button. A terminal must be connected to the TERMINAL Socket to implement Aux 2 Mode operation. In the Aux 2 Mode, a menu will be displayed on the terminal to facilitate selection of various system programs. Descriptions of the programs available in the Aux 2 Mode are provided in the PiC409 Programming Manual.

4.2.1.8 Aux 3 - The Aux 3 Mode is activated by placing the MODE Switch in AUX 3 position, followed by momentarily depressing the INITIALIZE Button. A terminal must be connected to the TERMINAL Socket to implement Aux 3 mode operation. In the Aux 3 Mode, a program called the Programmer's Keyboard Operating System (PKOS) may be used. PKOS allows a programmer to use the terminal to monitor and/or modify hexadecimal data at any hexadecimal memory address. PKOS is an EPROM resident program, located on the Compiler Module.

PKOS is a development and troubleshooting tool intended for monitoring and debugging Call Routines and basic system software. PKOS will not be needed to develop a Ladder Diagram Network (LDN) that uses standard Call Routines.

4.2.2 Baud Rate Terminal Switch

The baud rate determines the speed (bits per second) that data will be transmitted from PiC memory to the terminal. The greater the selected baud rate value, the faster the data will be transmitted. The baud rate selected on the BAUD RATE TERMINAL Switch must be the same as the baud rate selected on the terminal.

4.2.3 Baud Rate Loader Switch

The baud rate determines the speed (bits per second) that data will be transmitted between PiC memory and the loader. The greater the selected baud rate value, the faster the data will be transmitted. The baud rate selected on the BAUD RATE LOADER Switch must be the same as the baud rate selected on the loader.

4.2.4 Halt Button

The HALT Button is only functional in the Aux 3 Mode. Momentarily depressing the HALT Button in the Aux 3 mode halts the CPU. After the CPU is halted, the terminal will display the address of the next instruction that would have been executed if the CPU had not been halted.

The HALT Button is actually located on the Programmer's Console Module. Only a hole is provided on the PiC Control Panel to access the HALT Button. A non-conducting device, such as a pencil eraser, approximately 1/4 of an inch in diameter, is required to reach and depress the button through the access hole.

4.2.5 Initialize Button

The INITIALIZE Button is used to activate the selected mode of operation. Momentarily depressing the INITIALIZE Button, after placing the MODE Switch in a new position, will cause that mode to become active. Confirmation of proper initialization having taken place is signified by STATUS Light 1 ceasing to blink.

4.2.6 Scan Loss Light

The SCAN LOSS Light will be illuminated (red) when the LDN is not being scanned or if the scan time exceeds 100 milliseconds. The LDN is only scanned when the PiC RUN Mode is active. Therefore, the SCAN LOSS Light will always be illuminated if a mode other than PiC RUN is active. The SCAN LOSS Light will also be illuminated in the PiC RUN Mode if a programming error or hardware fault occurs which prevents the PiC from completing the scan or if the scan time exceeds 100 milliseconds. Refer to SECTION 6, TROUBLESHOOTING, for information about correcting a scan loss condition in the PiC RUN Mode.

4.2.7 Voltage Fail Light

The VOLTAGE FAIL Light will be illuminated (red) if either the +5 volts DC, +15 volts DC or -15 volts DC supply voltages are more than 5% out of tolerance. The PiC will be placed in a reset condition when the VOLTAGE FAIL Light is illuminated. If both the +5 volts DC and +15 volts DC supplies fail, the VOLTAGE FAIL Light cannot be illuminated. Voltage monitor lights are provided near the front edge of the 6809 CPU Module to indicate which supply voltage(s) is out of tolerance. Refer to the 6809 CPU Module Instruction Sheet, located in APPENDIX A, for a description of the voltage monitor lights.

4.2.8 Power Light

The POWER Light will be illuminated (green) when the PiC senses that either the +15 volts DC or +5 volts DC power supply voltages are present, ever though these voltages may be out of tolerance.

4.2.9 Reset Button

The RESET Button is used to stop execution of the currently active program and restart program execution at the address selected by the AUTO STARTUP Switches; the AUTO STARTUP Switches are located on the 6809 CPU Module. In effect, a reset is the same as removing and then reapplying power to the PiC. A reset is also initiated by an out-of-tolerance power supply.

4.2.10 Loader Socket

The 25-pin LOADER Socket is provided to attach a loader (magnetic tape unit) to the PiC. The loader is used to load data into PiC memory using the Load Mode, verify data currently in PiC memory using the Verify Mode or second data from memory using the Record Mode. FIGURE 4-2 depicts the functions of the pins on the LOADER Socket. APPENDIX C describes the various types of loaders available.

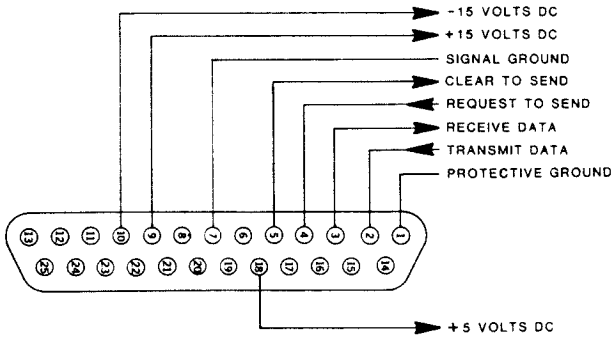

FIGURE 4-2 LOADER SOCKET

IMPORTANT

Do not use the DC Voltages in the LOADER Socket for powering external devices.

4.2.11 Terminal Socket

The 25-pin TERMINAL Socket is provided to attach a terminal or a personal computer to the PiC. A terminal is an interactive device used to communicate with the PiC. FIGURE 4-3 depicts the functions of the pins on the TERMINAL SOCKET. APPENDIX D describes the various types of terminals available.

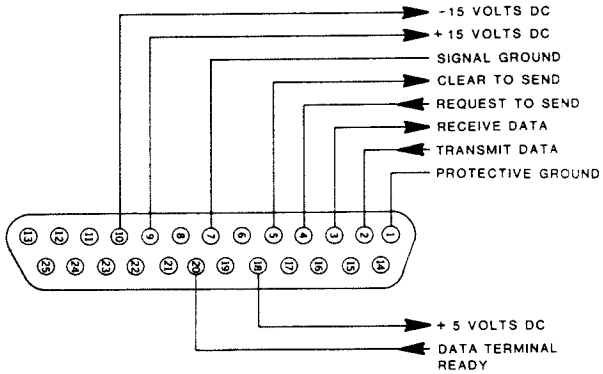

FIGURE 4-3 TERMINAL SOCKET

IMPORTANT

Do not use DC Voltages in the TERMINAL Socket for powering external devices.

4.2.12 Status Switches

Not used.

4.2.13 Status Lights

The four STATUS Lights will be illuminated to indicate error conditions and the status of various activities. The mode selected by the MODE Switch determines what each STATUS Light indicates when illuminated (amber). TABLE 4-1 is a quick reference to what an illuminated STATUS Light indicates in every mode and in no mode.

NOTE

The STATUS Lights are also used to indicate error conditions encountered while the Start-up Diagnostics are being performed. The Start-up Diagnostics are performed immediately following a power-on or reset condition. Refer to SECTION 6, TROUBLESHOOTING, for a description of the Start-up Diagnostics.

4.2.13.1 Status Light 1 - When illuminated, a load, verify or record operation is currently in progress. If STATUS Light 1 is blinking, no mode is active. Momentarily depressing the INITIALIZE Button, after placing the MODE Switch in the desired position, will cause STATUS Light 1 to stop blinking and the mode selected to become active.

4.2.13.2 Status Light 2 - When illuminated, a load, verify or record operation has been successfully completed.

4.2.13.3 Status Light 3 - When illuminated, a load, verify or record operation was aborted due to a defective tape, improper switch settings or improper connection. Ensure that the baud rate selected on the BAUD RATE LOADER Switch is the same as the baud rate selected on the loader. Perform the operation again (reactivate the selected mode) after the cause of the error is corrected.

4.2.13.4 Status Light 4 - When illuminated, the current operation was aborted due to improper data in memory (checksum error) or a faulty memory module. A checksum error will result if the data presently in memory does not compare with the data on the tape from which memory was loaded; a checksum error will also occur if a Ladder Diagram Network (LDN), that was programmed with a PC400 system, was loaded into a PiC409 system. See SECTION 6, TROUBLESHOOTING, for information about correcting a memory error.

	STATUS LIGHTS			
ACTIVE MODE	1	2	3	4
P.C. RUN				MEMORY ERROR
PROGRAM				MEMORY ERROR
LOAD	LOAD IN PROCESS	VERIFY COMPLETE	TAPE ERROR	MEMORY ERROR
VERIFY	VERIFY IN PROCESS	VERIFY COMPLETE	TAPE ERROR	MEMORY ERROR
RECORD	RECORD IN PROCESS	RECORD COMPLETE	TAPE ERROR	MEMORY ERROR
AUX 1				MEMORY ERROR
AUX 2				MEMORY ERROR
AUX 3				MEMORY ERROR
NO MODE	BLINKING (DEPRESS INITIALIZE BUTTON TO ACTIVATE SELECTED MODE)			MEMORY ERROR

TABLE 4-1 STATUS LIGHTS

SECTION 5 - START-UP

5.1 INTRODUCTION

This section provides the procedures for placing the PiC into an operational state. The PiC should be completely installed as described in SECTION 3 and all worksheets described in SECTION 2 should be completed before performing any procedures in this section.

5.2 MODULE INSTALLATION

As part of the initial start-up procedure in SECTION 5.3, microcomputer modules will be installed. Installation of a microcomputer module is accomplished by performing the following procedure:

1. Locate the module to be installed and remove the protective package.

IMPORTANT

Do not remove the conductive bag from around a microcomputer module until the module is ready to be inserted into the nest. Microcomputer modules contain components that are susceptible to damage by static electricity.

---

2. If applicable, configure the switches and/or jumpers on the module. If the module to be installed is a memory module, refer to the Memory Module Worksheet for switch setting and jumper placement information. If the module to be installed is an I/O module, refer to the I/O Module Worksheet for switch setting and jumper placement information.

IMPORTANT

Handle microcomputer modules by the edges. Avoid touching the etched conductors or gold edge tabs. Oil from your fingers will cause the edge connectors to slowly accumulate dirt, which may eventually result in a bad electrical connection. Always use a module extraction tool to remove a microcomputer module.

IMPORTANT

Ensure that power to the rack is off before inserting or removing microcomputer modules, edge connectors and faceplates. Failure to remove power may result in permanent damage to the module.

---

3. Insert the module into the nest location specified on the Module Placement Worksheet. Each module has a notch in one corner to prevent modules from being inserted incorrectly. Module insertion is accomplished by placing the module into the guides corresponding to the specified slot number. The notch should be adjacent to the upper guide (module components on the right side of the module). The module may then be slid into the nest until the rear-edge connector is flush against the backplane socket. To complete module insertion, apply pressure to the outside edge of the module until the module is seated.

4. If applicable, place the front-edge connector or faceplate onto the front-edge connector of the module.

5.3 START-UP

5.3.1 Initial Start-Up

The following initial start-up procedure should be performed when starting up the PiC for the first time. FIGURE 5-1 is a flowchart that summarizes the initial start-up procedure.

1. Locate the 6809 CPU Module and remove the protective package. Set the RESTART ADDRESS Switches to the memory address of the Control Panel Operating System (CPOS). See the 6809 CPU Module Instruction Sheet, located in APPENDIX A, for the description of the RESTART ADDRESS Switches. Insert the 6809 CPU Module into the slot assigned by the Module Placement Worksheet.

2. Apply power to the PiC.

3. Adjust the power supplies. LED indicators and an ADJUST ASSIST Button are located near the outer edge of the 6809 CPU Module to aid in the adjustment process. Refer to the 6809 CPU Module Instruction Sheet, located in APPENDIX A, for a description of the power supply adjustment aids provided on the module. APPENDIX B describes the potentiometer locations and other adjustment-related information for the power supplies recommended by Giddings & Lewis Electronics.

4. Remove power from the PiC.

5. Locate the PiC Support Module and remove the protective package. Insert the PiC Support Module into the slot assigned by the Module Placement Worksheet.

6. Locate the Programmer's Console Module and remove the protective package. Place the Bit Rate Switch on the Programmer's Console Module **in the "0" position. Insert the Programmer's Console Module into the slot assigned by the Module Placement Worksheet.**

7. Locate the Compiler Module and remove the protective package. Insert it into the slot assigned by the Module Placement Worksheet.

8. Locate the memory modules. For each memory module remove the protective package, set the switches and insert into the nest. The Memory Module Worksheet defines the switch settings of the memory modules. The Module Placement Worksheet defines the nest location into which the memory modules should be inserted.

9. Place the Control Panel on the system. Two edge-mounting sockets are provided on the rear of the PiC Control Panel. Mount the PiC Control Panel onto the front-edge connectors or both the PiC Support Module and the Programmer's Console Module. Apply power to the PiC and allow the system to go through its start-up diagnostics (refer to Step 17). This will verify that all the system boards have been placed properly in the system before you proceed. Remove power from the PiC. Remove the Control Panel.

10. Locate the remaining modules to be installed. For each module, remove the protective package, configure the switches and/or jumpers and insert the modules into the nest. The I/O Module Worksheet defines the switch setting and jumper placement of the I/O Modules. The Module Placement Worksheet defines the nest locations into which the modules should be inserted. After all the modules are inserted, install the corresponding faceplates and edge connectors. Apply power to the PiC.

11. Re-adjust the power supplies, if necessary.

12. Remove power from the PiC.

13. Reinstall the Control Panel (refer to Step 9).

14. Place the PiC Panel MODE Switch in the RUN position.

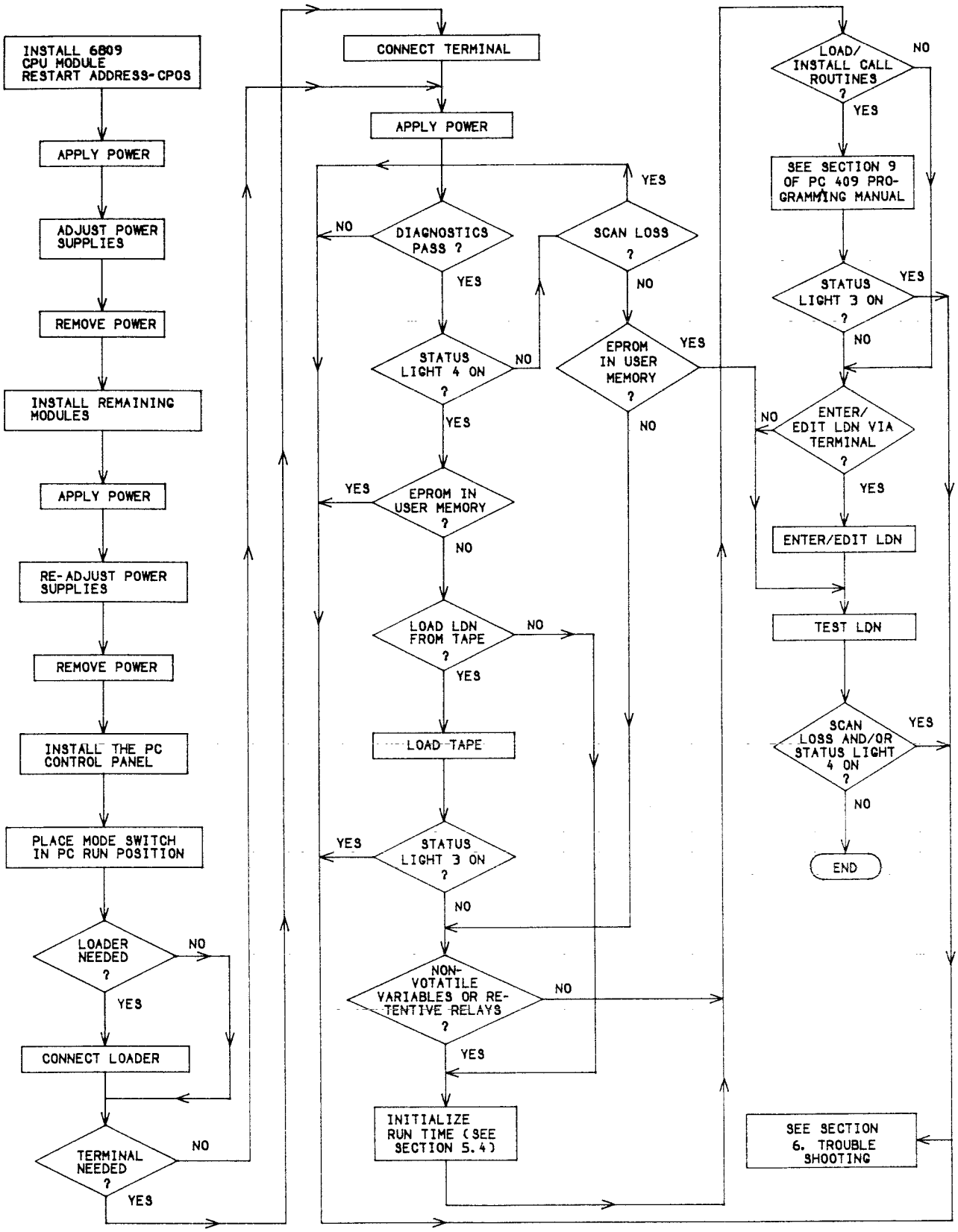

FIGURE 5-1 START-UP FLOWCHART

15. If a load, verify or record operation will be performed, connect a loader to the PiC Control Panel LOADER Socket. See the Loader Instruction Sheets, located in APPENDIX C, for information regarding the connection, configuration and operation of the loader being employed.

16. If operations will be performed that require a terminal, connect a terminal to the PiC Control Panel TERMINAL Connector. A terminal will be required to perform operations in the PROGRAM, AUX 1, AUX 2, AUX 3 Modes. A terminal may also be desired in the RUN Mode to enable use of Real time Debug. See the Terminal Instruction Sheets, located in APPENDIX D, for information regarding the connection, configuration and operation of the terminal being employed.

17. Apply power to the PiC. The Start-up Diagnostic should then be automatically performed. The Start-up Diagnostic performs three tests which are described in SECTION 6, TROUBLESHOOTING. The PiC cannot be placed into an operational state until all three tests have been successfully completed. The STATUS Lights on the PiC Control Panel will be illuminated and extinguished in the following sequence to indicate the progress of the Start-up Diagnostic:

    1. STATUS Lights 1, 2 and 3 will be illuminated.

    2. STATUS Light 1 will be extinguished to indicate that test 1 has passed.

    3. STATUS Light 2 will be extinguished to indicate that test 2 has passed.

    4. STATUS Light 3 will be extinguished to indicate that test 3 has passed.

    If the STATUS Light sequence is not performed as specified, a failure has occurred. The cause of the failure must be determined and corrected before this procedure can be continued. Refer to SECTION 6, TROUBLESHOOTING.

18. If STATUS Light 4 is not illuminated following successful completion of the Start-up Diagnostic, an LDN was previously loaded into user memory; user memory is populated with either EPROM or battery-backed CMOS Modules. If the SCAN LOSS Light is not illuminated, the PiC RUN Mode will be active. If the SCAN LOSS Light is illuminated while in the RUN Mode, refer to SECTION 6, TROUBLESHOOTING to determine the reason for the scan loss.

NOTE

If an LDN was previously loaded or will be loaded into the Static RAM or CMOS, the number of nonvolatile variables and retentive relays may be changed by performing the Run Time Initialize Procedure in SECTION 5.4. The number of nonvolatile variables and retentive relays cannot be modified if the LDN is on EPROM.

If STATUS Light 4 is illuminated following successful completion of the Start-up Diagnostic, an error in user memory has been detected. One of the causes of a memory error is that Run Time has not been loaded into user memory starting at address 8K. If the memory module installed at 8K is a RAM or CMOS Module, one of the following methods should be used to load Run Time:

1. Load a Ladder Diagram Network (LDN) from a magnetic tape that was previously recorded from another PiC. Loading this tape will

also load Run time and any Call Routines that may have resided in the user memory of the other PiC.

2. Perform the Run Time Initialization procedure described in SECTION 5.4.

After Run Time is loaded and user memory is populated with RAM and CMOS, the desired Call Routines may be entered, installed and the LDN may be entered or edited. The PiC409 Family Programming Manual describes how to perform these functions.

NOTE

If STATUS Light 4 is illuminated and an EPROM Module is addressed at 8K or after Run Time is loaded, refer to SECTION 6, TROUBLESHOOTING, to determine the reason for the memory error.

---

19. Test the operation of the LDN. This is accomplished by activating the PiC RUN Mode, if not already active. Confirmation of the PiC RUN Mode being active is indicated by all STATUS Lights and the SCAN LOSS Light being extinguished. While in the PiC RUN Mode, ensure that all operations programmed in the LDN can be performed as specified.

    If an operation is not being performed as specified, verify that the wiring of the PiC and the devices controlled by the PiC is correct. Also, verify that the module(s), that are associated with the operation not being performed as specified, are properly configured. If, after correcting the wiring and configuration of the components in question (if required), the operation is still not being performed as specified, check the LDN to determine the cause of the problem. If a terminal is connected to the PiC Control Panel TERMINAL Socket, a program called Real Time Debug may be used. Real Time Debug facilitates troubleshooting of the LDN and the devices controlled by the LDN. Refer to the PiC409 Family Programming Manual for a description of Real Time Debug.

5.3.2 Standard Start-Up

After the initial start-up procedure is performed and if user memory is non-volatile (EPROM or battery-backed CMOS), start-up of the PiC is accomplished by placing the PiC Control Panel MODE SWITCH in the PiC RUN Mode position and applying power to the PiC. If volatile RAM Module(s) occupy user memory, user memory will have to be loaded following application of power to the PiC.

NOTE

A program, called the EPROM Programmer, is available in the AUX 2 Mode. The AUX 2 Mode facilitates the transfer of programs currently in user memory onto EPROM devices. The programmed EPROM devices may then be mounted onto an EPROM Module(s). The populated EPROM Module(s) may be installed in place of the currently installed memory module(s) or in another PiC. Operation of the EPROM Programmer is described in the PiC409 Family Programming Manual.

If user memory will not be modified, loaded or recorded, the following components may be removed from the PiC:

1. PiC Control Panel

2. Programmer's Console Module

3. Compiler Module

If any of the aforementioned components are removed from the PiC, the RE-

START ADDRESS Switches on the 6809 CPU Module must be set to the starting address of the LDN, which is 8K. Refer to the 6809 CPU Module Instruction Sheet, located in APPENDIX A, for a description of the RESTART ADDRESS Switches.

NOTE

The Start-up Diagnostic will not be performed following a power-on or reset condition if the RESTART ADDRESS Switches are not set to the address of the Control Panel Operating System (CPOS).

5.4 RUN TIME INITIALIZATION

Run Time Initialization is a procedure that may be performed when Static RAM or CMOS user memory is installed and one or more of the following functions is required:

1. Download Run Time from the Compiler Module to the RAM or CMOS Module addressed at 8K.

2. Assign variables to be nonvolatile. The value of a variable assigned to be nonvolatile will be retained following a power loss or reset condition.

3. Assign internal relays to be retentive. The status (energized or de-energized) of an internal relay assigned to be retentive will be retained following a power loss or reset condition.

A terminal must be connected to the PiC Control Panel TERMINAL Socket to facilitate the performance of Run Time Initialization. The following is a description of the Run Time Initialization procedure:

1. Select the PROGRAM position on the MODE Switch. STATUS Light 1 should be blinking. Momentarily depress the INITIALIZE Button to activate the Program Mode. Confirmation of the Program Mode being active is indicated by STATUS Light 1 being extinguished and the following message being displayed on the terminal:

   PiC409 COMPILER VER X.X
   (C) (date) GIDDINGS & LEWIS

   If new (unprogrammed) memory module(s), memory modules with invalid programs, improperly installed memory modules or memory modules with hardware deficiencies are installed in user memory, the following error message will be displayed on the terminal:

   >>... CSM ERR!
   >>...

2. Enter /INIT via the terminal keyboard. The following prompt should then be displayed:

   INITIALIZE RUN TIME? Y-N

   Momentarily depress the Y key followed by the RETURN Key to download Run Time from the Compiler Module onto the memory module addressed at 8K. If the memory module addressed at 8K was previously loaded with Run Time or an LDN, memory will not be effected. Momentarily depress the N Key followed by the RETURN Key to abort this procedure and return to the program mode.

NOTE

Terminating this procedure by pressing the ESC Key will return the PiC to the Program Mode and cause a checksum error to occur, even if a checksum was not previously active. This procedure must be performed again, in entirety, to eliminate the checksum error.

---

3. If the Y Key followed by the RETURN Key was depressed in step 2, and a checksum error was previously active, the following message will be displayed:

   INVALID USER MEMORY!

   Following this message (if displayed), the following prompt will be displayed:

   CLEAR MEMORY? Y-N

   If the "INVALID USER MEMORY!" message is not displayed and the LDN and/or Call Routines currently in user memory must be preserved, momentarily depress the N Key followed by the RETURN Key. If the "INVALID USER MEMORY!" message is displayed, user memory must be cleared by momentarily depressing the Y Key followed by the RETURN Key. If the "INVALID USER MEMORY!" message is displayed and memory is not cleared, the checksum error will remain active.

4. A valid entry in step 3 causes the following prompt to be displayed:

   HOW MANY NONVOLATILE VARIABLES (STARTING WITH VARIABLE VO)?

   Enter 0, followed by a RETURN, to make all variables (V0-V899) volatile. The digits 1 through 900 correspond to variables V0 through V899;. Enter 1, followed by a RETURN, to make variable V0 non-volatile. Enter 2, followed by a RETURN, to make variables V0 and V1 non-volatile. Enter 3, followed by a RETURN, to make variables V0, V1, and V2 non-volatile. Enter 900, followed by a RETURN, to make all variables (V0-V899) nonvolatile. Entry of a value greater than 900 will not be accepted by the PiC.

5. A valid entry in step 4 causes the following prompt to be displayed:

   HOW MANY RETENTIVE RELAYS (STARTING WITH RELAY 512?)

   Enter 0, followed by RETURN, to make relays 512 through 1511 non-retentive. The digits 1 through 1000 correspond to relays 512 through 1511; enter 1, followed by RETURN, to make relay 512 retentive; enter 2, followed by RETURN, to make relays 512 and 513 retentive; enter 3, followed by RETURN, to make relays 512, 513 and 514 retentive; ...; enter 1000, followed by RETURN, to make relays 512 through 1511 retentive. Entry of a value greater than 1000 will not be accepted by PiC.

6. A valid entry in step 5 causes the following prompt to be displayed:

   "AVAILABLE MEMORY = XX"

   This value will equal the number of bytes available for your total user memory.

   "CURRENT SIZE LIMIT OF LDN = XX"

   This value (XX) will equal the maximum number of bytes of user memory allowed for your LDN.

   "ENTER SIZE LIMIT OF LDN IN K BYTES (2-40)"

   Enter a number from 2 to 40 to indicate the number of K bytes you wish to reserve for your LDN (one K = 1024 bytes). This number cannot exceed the

total user memory available in your PiC. If the LDN limit is less than the total user memory available, the remaining memory can be used for data storage without the risk of the LDN overlapping it.

"IN WHICH BANK (1-8) WILL THIS LDN RESIDE?"

Enter the desired bank. If you are going to use bank 1 or if you are not using the bank select option, enter a "1". If a "1" is entered, the following message will appear:

"BANK 1 SELECTED. ENTER THE HIGHEST BANK TO BE USED (1-8)"

At this point enter the number of highest memory bank to be used in the PiC. If you are not using the bank select option, enter a "1".

After entering the above information the PiC will display the following message:

"RUNTIME INITIALIZATION COMPLETE!"
"PIC409 LDN COMPILER VER 1.3
"(C) 1985 GIDDINGS & LEWIS"

NOTE

If the "CSM ERR!" (checksum error) is still active and memory was cleared in step 3, the error is due to either improper module installation or a hardware deficiency. Refer to SECTION 6, TROUBLESHOOTING.

SECTION 6 - TROUBLESHOOTING

6.1 POWER SUPPLY

TROUBLE	REMEDY
1. No AC Power	1. Check customer disconnect. Check AC at rack screw terminals. Check rack circuit breakers.
2. No DC Power	2. Check power supply wiring for loose connections. Replace power supply if defective.
3. Power Supply checks OK, LEDs on CPU inactive.	3. Check if power supply is properly seated. Check wiring to motherboard terminal strip.
4. One or more CPU LEDs on.	4. Adjust power supply until LEDs are out. Upgrade to larger power supply if necessary, or reduce load. Replace power supply if defective.

6.2 START-UP DIAGNOSTICS

TROUBLE	REMEDY
1. No operation.	1. Check CPU switch setting. Ensure following modules present: 6809 CPU, PiC Support, Compiler, and Control Panel. Ensure no other modules are addressed to the areas occupied by above four modules.
2. Lights 1, 2, 3 on over ten seconds.	2. Replace defective CPU Module.
3. Lights 1 off; 2, 3 on over ten seconds.	3. Replace defective PiC Support Module.
4. Lights 1, 2 off; 3 on over ten seconds.	4. Replace defective Compiler Module.

6.3 PERIPHERIAL DEVICES

TROUBLE	REMEDY
1. Computer connected to PiC cannot load or record.	1. Make certain I/O port has been redirected to terminal port.
2. Loader will not record.	2. Check to see if cassette or cartridge is write protected, remove checksum error from LDN, set PiC Control Panel switches "down" and check the Internal Loader switch settings.
3. Cannot load.	3. Add sufficient memory to PiC. Check bit rate switches. Repair or replace loader or cable.
4. Terminal does not respond.	4. Check bit rate switches. Repair or replace defective terminal or cable.
5. Printer does not respond.	5. Check bit rate switches. Repair or replace defective printer or cable.

6.4 CPOS - CONTROL PANEL LEDS

TROUBLE	REMEDY
1. LED #1 blinking.	1. Depress INITIALIZE push button.
2. LED 1 blinking after INITIALIZE.	2. Check module addresses.
3. LED 1 not blinking AUX 1.	3 Check Compiler Module for Aux 1 software (see Aux 1 supplement supplied with PiC modules). If Aux 1 is installed, replace defective Compiler Module. If Aux 1 is not installed, light will not blink.
4. All LEDs steady.	4. Check CPU switch settings.
5. LED 4 on steady when LDN is in EPROM.	5. Replace EPROM Module or reload CMOS program (checksum error).
6. Loss of scan.	6. Check the improperly used GOTO statement in LDN or excessively long LDN. Check module addresses.

APPENDIX A

MODULE INFORMATION

GIDDINGS & LEWIS
ELECTRONICS

PiC409 and PiC49 MODULE CURRENT REQUIREMENTS

The information on this sheet is to help you determine the power supply requirements for your PiC. Use the table on the reverse side to determine how much your PiC modules will use.

Example:

Description	Part Number	Current Required For Each Module (Amps) +5V	+15V	-15V	Number of Modules	Total Current Required (Amps) +5V	+15V	-15V
18. 24V 8 DC Output	502-02815-00	.19			4	.76		

Select the rack(s) listed below that will accommodate all of your modules and their power requirements. The total load must not exceed the maximum power supply output. Order more racks if additional slots or power is required.

Rack Description	Rack Part Number	*Power Supply	Number of Slots	Maximum Current Capability (Amps) +5V	+15V	-15V	Maximum Power Supply **Output
PiC49 Master Rack	503-15729-00	Converter Concepts	23	10	.8	.8	75 Watts
PiC409 Master Rack	503-15697-00	LH Research	46	12	1.5	1.5	100 Watts
PiC409 Extension Rack	503-15699-00	LH Research	46	12	1.5	1.5	100 Watts

The racks listed below will be available in September 1985.

PiC49 Rack	503-16262-00	Converter Concepts	25	10	.8	.8	75 Watts
PiC409 Master Rack (non-expandable)	503-16264-00	LH Research	50	12	1.5	1.5	100 Watts
PiC409 Master/Extension Rack (expandable)	503-16265-00	LH Research	50	12	1.5	1.5	100 Watts

*Converter Concepts part number VST75-3799-01-0000
LH Research part number TTM-23-133

**Watts = Voltage x Current

Specifications subject to change without notice.

PiC409 and PiC49 MODULE CURRENT REQUIREMENTS

	Description	Part Number	*Current Required For Each Module (Amps) +5V	+15V	-15V	Number of Modules	Total Current Required (Amps) +5V	+15V	-15V
1.	6809 CPU	502-03017-21	.72	.05	.02				
2.	PiC Support	502-03195-08	.50						
3.	PiC Support w/8K EPROM	502-03195-08	.61						
4.	PiC Support w/16K EPROM	502-03195-08	.66						
5.	PiC Support w/8K CMOS	502-03195-16	.54						
6.	Programmer's Console	502-02871-20	.25	.08	.06				
7.	Compiler	502-03174-00	.48						
8.	Scan Monitor	502-02906-00	.08						
9.	Floating Point Arithmetric	502-02917-02	.22	.07					
10.	8K CMOS	502-02998-28	.15	.02					
11.	64K EPROM	503-15529-00	.46						
12.	Static RAM	502-03206-08	.60						
13.	40K CMOS	502-03280-00	.25						
14.	24V 8 DC Input	502-02814-08	.09						
15.	15V 8 DC Input	502-02972-08	.08						
16.	24V 16 DC Input	502-02814-16	.14						
17.	15V 16 DC Input	502-02972-16	.12						
18.	24V 8 DC Output	502-02815-00	.19						
19.	24V 4 DC Output - 3 Amp	502-02999-00	.21						
20.	24V 8 DC Output Interface	502-02954-00	.18						
21.	32 I/O TTL	502-02869-20	.40						
22.	2 Amp 8 DC Output	502-03381-00	.20						
23.	120V 8 AC Input	502-02959-00	.11						
24.	120V/230V 8 AC Input	502-02959-50	.21						
25.	120/230V 8 AC Output	502-02960-00	.19						
26.	24V 8 AC Input	502-03172-00	.11						
27.	24V 8 AC Output	502-03173-00	.20						
28.	RS-232C Interface	502-02833-20	.18	.02	.02				
29.	Remote I/O Driver (FIFO)	502-15274-27	.80	.02	.02				
30.	PiC to PiC Communication	502-15613-00	.65	.02	.02				
31.	Remote I/O Receiver (PMC)	503-15275-27	.75	.02	.02				
32.	20mA - RS-422 Converter	502-03253-00	.10	.02	.02				
33.	Video Interface	502-02904-20	.44						
34.	Video Memory	502-02905-00	.48						
35.	Video Memory (with RTD)	503-70075-00	1.00						
36.	uP Digitizing	502-02819-00	.32	.01	.01				
37.	Digitizing Reference	502-02820-01	.25	.03	.03				
38.	Resolver/Inductosyn Driver	502-02821-00		.51	.51				
39.	Encoder Receiver	502-02947-01	.39						
40.	Data Acquisition	502-02907-20	.52	.01	.04				
41.	D/A Converter	502-02822-00	.20	.04	.05				
42.	Unipolar Data Acquisition	502-03362-00	.52	.01	.04				
43.	uP Programmable Timer	502-02908-00	.35						
44.	Stepper Motor w/o Ramp	502-03016-00	.26						
45.	Stepper Motor w/Ramp	502-03016-50	.32	.04					
46.	High-Speed Encoder	502-035881-00	.35						
A.	PiC Control Panel	502-03207-00	.06		.05				
B.	Nest Driver	502-02952-20	.39						
C.	Nest Receiver	502-02953-00	.38						
						TOTAL			

*Normal requirements under static conditions.

**TOTAL AMPS REQUIRED (Total x 1.25)

**To compensate for dynamic and peak loads, multiply total Amps required by 1.25.

TABLE OF CONTENTS

DESCRIPTION PAGE

1 - BASIC MODULES

6809 CPU Module 1-1
PC Support Module 1-5
Programmer's Console Module 1-9
Compiler Module 1-13
Scan Monitor Module 1-15
Floating Point Arithmetic Module 1-19

2 - MEMORY MODULES

2K/4K/8K CMOS RAM Module 2-1
EPROM Module 2-5
Static RAM Module 2-9
36K/40K CMOS RAM Module 2-13

3 - DC INPUT/OUTPUT MODULES

8 DC Input Module 3-1
16 DC Input Module 3-5
DC Output Module 3-9
3 Amp DC Output Module 3-13
DC Output Interface Module 3-17
Parallel TTL I/O Module 3-23
2 Amp DC Output Module 3-27

4 - AC INPUT/OUTPUT MODULES

8 AC Input Module 4-1
8 AC Output Module 4-5
24 VAC Input Module 4-9
24 VAC Output Module 4-13

5 - COMMUNICATIONS MODULES

RS-232-C Interface Module 5-1
FIFO Communications Module 5-5
Peripheral Microcomputer Module 5-9
20mA/RS-422 Converter Module 5-13
Serial Communications Faceplate 5-21

6 - VIDEO MODULES

Video Interface Module 6-1
Video Memory Module 6-5

7 - SERVO FEEDBACK MODULES

Microprocessor Digitizing Module 7-1
Digitizing Reference Module 7-5
Resolver/Inductosyn Driver Module 7-9
Encoder Module 7-13
High-Speed Encoder Module 7-21

8 - ANALOG MODULES

Data Acquisition Module 8-1
Unipolar Data Acquisition Module 8-7
D/A Converter Module 8-15
4-20 mA Analog Output Module 8-19

9 - SPECIAL FUNCTION MODULES

µP Programmable Timer Module 9-1
Step Rate Position Counter Module 9-5

6809 CPU MODULE

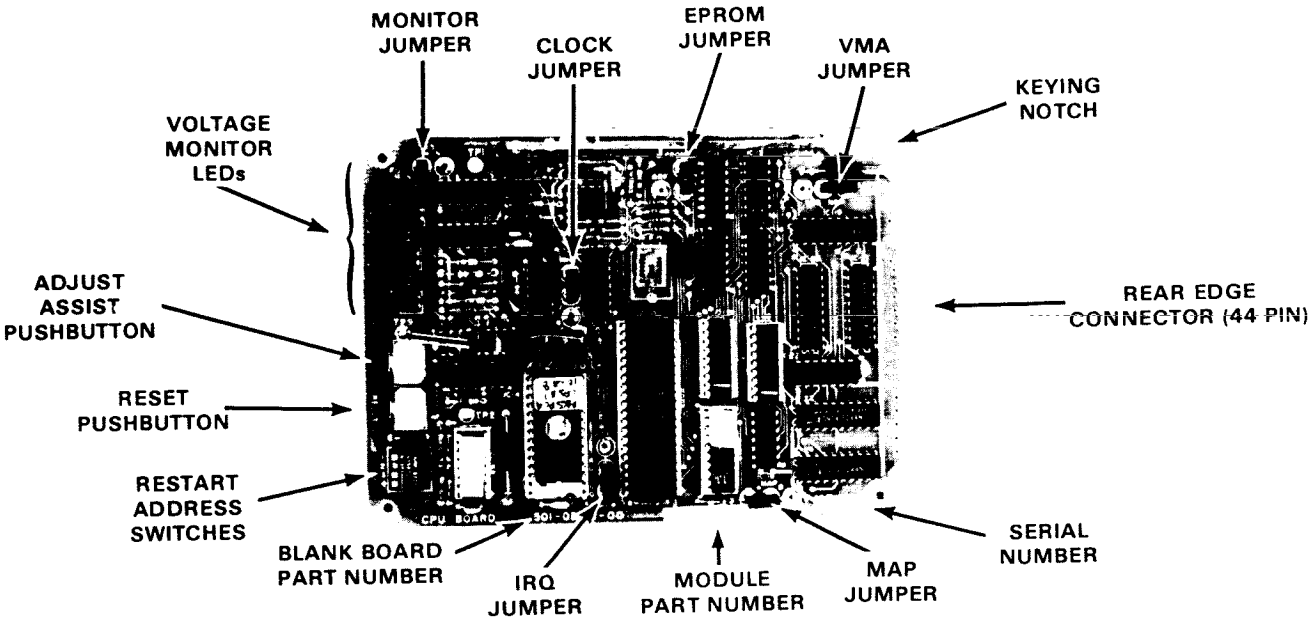

FIGURE 1. 6809 CPU MODULE

1.0 INTRODUCTION

The 6809 CPU (Central Processing Unit) Module contains the 6809 microprocessor, bus drivers and buffers, system clock circuitry, a voltage monitor, 1K bytes of read/write memory, and a 4K byte EPROM. The 6809 CPU Module is intended for use with additional memory and input/output modules.

2.0 THEORY OF OPERATION

2.1 RAM

The 6809 CPU Module contains 1,024 bytes of RAM (read/write memory) for the storage of vector addresses, the stack, and data used by the monitor and other software.

2.2 EPROM

A 4,096-byte EPROM (Erasable Programmable Read-Only Memory) is used for permanent storage of two programs: PKOS (Programmer Keyboard Operating System), a monitor; and CPOS (Control Panel Operating system), used to communicate with the user via the PC Control Panel.

2.3 VECTORED RESTART

Four RESTART ADDRESS Switches allow the user to select one of sixteen combinations as shown in Figure 2. The positions of these switches control the address at which the CPU begins execution of the program after a reset condition occurs. The two normal choices are:

1. Without the Control Panel, the user selects the 8K position (* Figure 2) with all four switches in the ON position. (RTD cannot be used without a Control Panel unless Video Memory and Video Interface Modules with RTD EPROMS are being used.)

2. With the Control Panel, the user selects the 60K position (** Figure 2) with switch 2 ON and the remaining three switches OFF. This permits the CPOS program to be active upon start-up. RTD can be used.

A factory-programmed PROM (Programmable Read-Only Memory) provides the addresses. Resets may be caused by an out-of-tolerance power supply, initial power-up, or by pressing the RESET pushbutton.

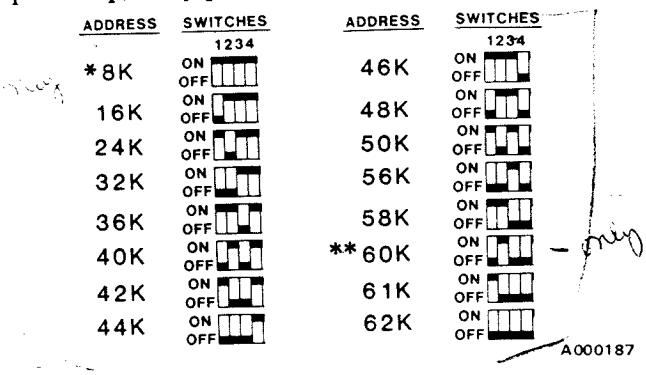

FIGURE 2. RESTART SWITCHES

GIDDINGS & LEWIS ELECTRONICS

CPOS - monitor control panel program

2.4 RESET PUSHBUTTON

The RESET Pushbutton, when pressed, causes the CPU to begin execution of the program selected by the RESTART ADDRESS switches.

2.5 VOLTAGE MONITOR

The Voltage Monitor will detect a variation of more than ±5% in any of the power supplies. The CPU will be held in a reset condition until all three supplies are adjusted within the ±5% tolerance. The ADJUST ASSIST Pushbutton, when pressed, narrows the Voltage Monitor tolerance to ±0.5%. This feature allows the power supplies to be fine adjusted without using an external voltmeter.

When the system power is applied following an outage, the Voltage Monitor will initiate a restart sequence.

2.6 JUMPER POSITION

Nine jumpers are provided on the CPU Module. Table 1 indicates the proper position for these jumpers.

TABLE 1. JUMPER POSITIONS

JUMPER NO	NAME	CORRECT POSITION	
1	MONITOR SELECT	FULL MON	(vertical)
2	EPROM ENABLE	ON	(vertical)
3	GATE VMA	NO	(right)
4	CLOCK SELECT	2MHZ	(lower)
5	IRQ SELECT	FIRQ	(upper)
6	MAP SELECT	MAP A	(left)
7	DMA REQUEST	CLOSED	(open)
8	DATA TIMING	CLOSED	(normal)
9	EPROM TYPE	-5	(lower)

3.0 INSTALLATION

IMPORTANT

ENSURE THAT POWER TO THE CARD RACK IS OFF BEFORE INSERTING OR REMOVING THIS OR ANY MICRO-COMPUTER MODULE. Failure to do so may result in permanent damage to the module.

The CPU module must be installed in the Master Rack. The rack is physically keyed to prevent modules from being inserted incorrectly. Set the RESTART ADDRESS Switches per the instructions in Section 2.3.

4.0 POWER SUPPLY ADJUSTMENT

As seen in FIGURE 3, six on-board LED indicators provide information on the power supply status. When the power supplies are correctly adjusted, no LED's will be illuminated: The adjustment procedure is as follows:

1. Remove other modules from the nest.

2. Adjust the +5, +15, and -15 volt supplies until the corresponding LEDs are off. The voltages are now within ±5 percent.

3. Press and hold the ADJUST ASSIST Pushbutton. Continue adjusting the supplies until the LEDs are again off. The voltages are now within ±0.5 percent. Release the ADJUST ASSIST Pushbutton.

4. Insert the other modules into the nest. Repeat step 3.

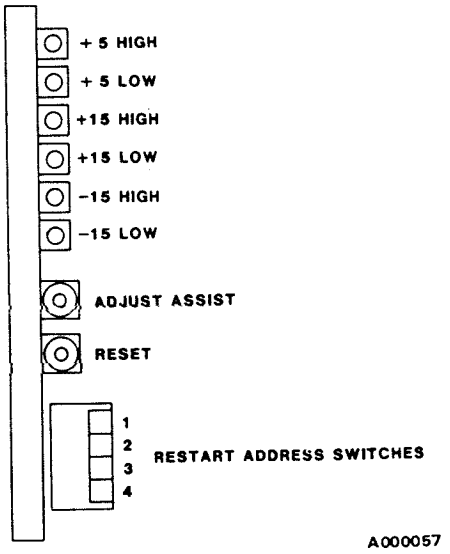

FIGURE 3. MODULE ADJUSTMENTS

6809 CPU MODULE

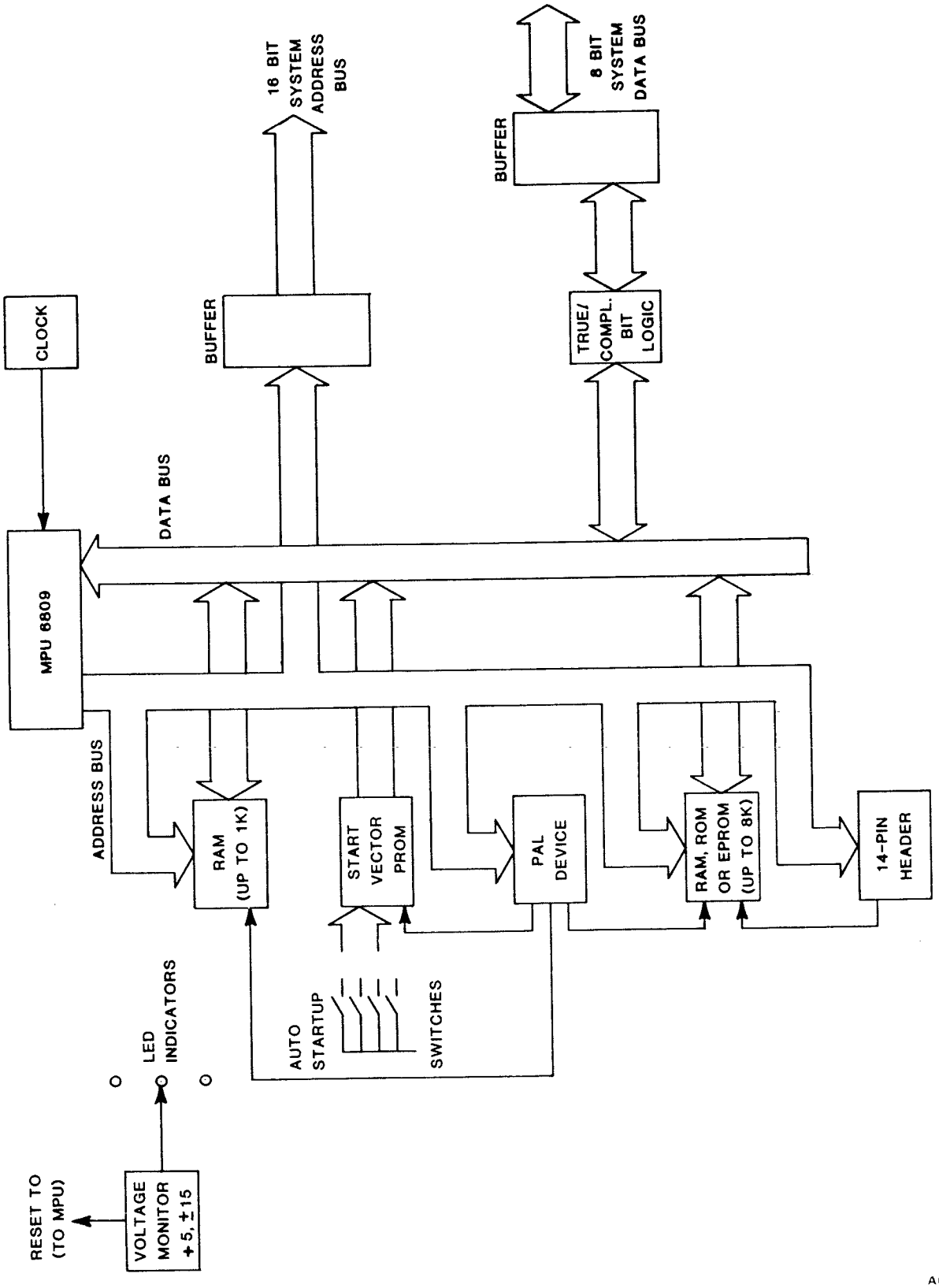

FIGURE 4. BLOCK DIAGRAM

6809 CPU MODULE

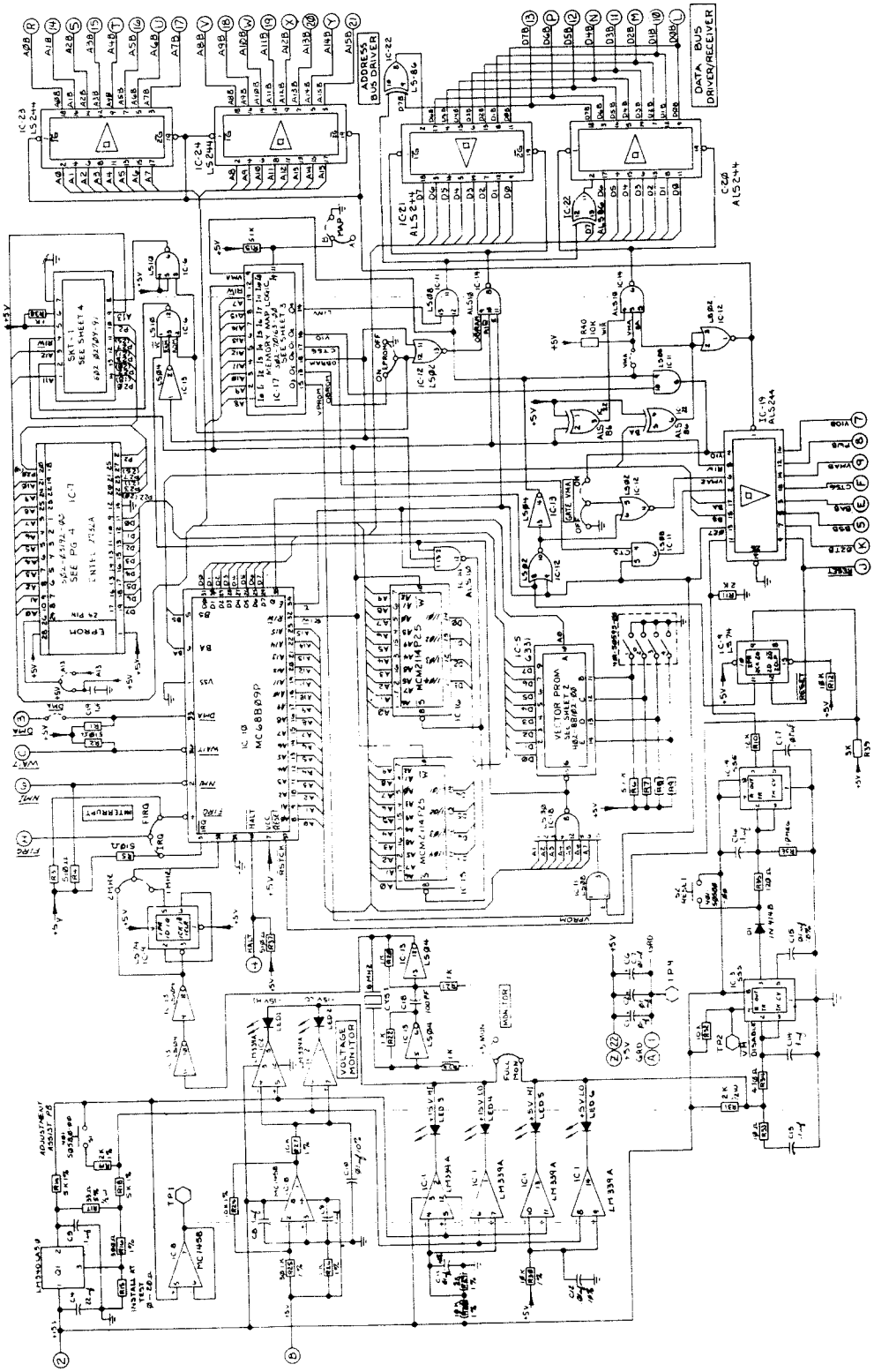

FIGURE 5. SCHEMATIC

GIDDINGS & LEWIS ELECTRONICS

C/H BAT-Small 401-52187-00
C/H BAT-LRG 401-52446-00

PC SUPPORT MODULE

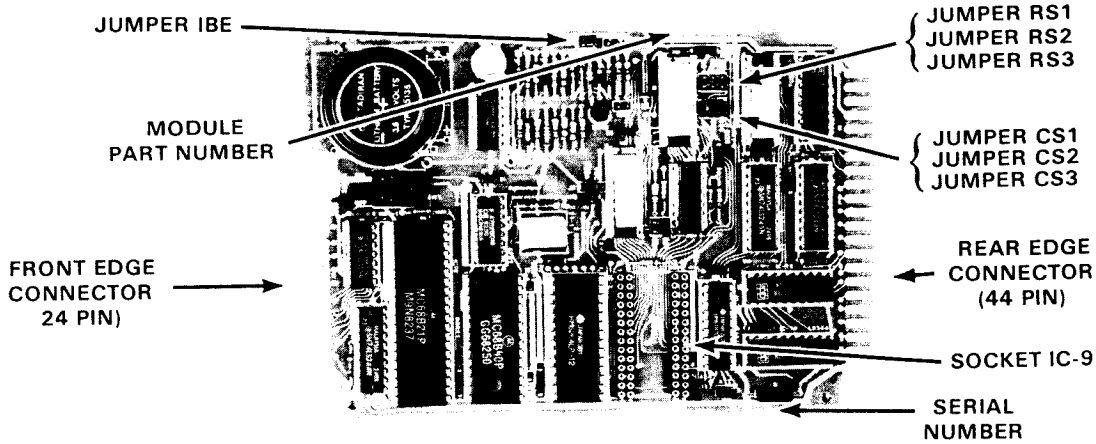

FIGURE 1. PC SUPPORT MODULE

1.0 INTRODUCTION

The PC Support Module, part 502-03195-08, is a multifunction module which is necessary to the operation of the programmable controller. The module contains four major circuits: 8K bytes of CMOS Random Access Memory (RAM); Control Relay RAM; a timer circuit; and a parallel input/output port.

2.0 MEMORY MODE SELECTION

2.1 8K RAM

An 8K x 8 CMOS RAM, addressed starting at 0, is located on the module. This memory is enabled by removing jumper RS1, and disabled by replacing the jumper. Due to the battery backup circuit provided, data stored in this RAM will remain intact during power outages.

2.2 ADDITIONAL MEMORY

An 8K CMOS RAM or an 8K or 16K EPROM chip may be placed in socket IC-9 for additional user memory starting at 8K ($2000). The CMOS RAM chip uses the left set of socket holes. During power outages, the battery on the module preserves the data stored on the chip. The EPROM chips use the right set of socket holes. Jumpers RS2 and RS3 control the memory size. See Table 1. There is no bank select feature for this additional memory.

TABLE 1. MEMORY JUMPERS

MEMORY SIZE	JUMPER RS 2	JUMPER RS 3
NONE	IN	IN
8K x 8	OUT	IN
16K x 8	OUT	OUT

NOTE

The memory chips must have an access time of 250ns or faster to work with the PC409.

3.0 CONTROL RELAY SIZE SELECTION

The size of the memory area set aside for Control Relay (CR) usage is controlled by the three jumpers labeled CS1, CS2, and CS3.

Two thousand control relays are supplied in the standard PC configuration. An additional 1,024 control relays (for a total of 3,024) may be obtained by designating the I/O addresses of the last four extension racks as control relays. Another 768 control relays (for a sum total of 3,792) may be obtained by designating the I/O addresses of all extension racks as control relays.

TABLE 2 indicates the control relay size options and associated jumper positions.

TABLE 2. CR JUMPERS

CONTROL RELAYS	JUMPER CS1	JUMPER CS2	JUMPER CS3
2,000	IN	IN	OUT
3,024	IN	OUT	OUT
3,792	OUT	OUT	OUT

4.0 STANDBY BATTERY

An on-board lithium cell ensures the integrity of stored data during power outages. Due to the extremely low current requirement of the RAMs, battery life expectancy is rated in excess of 2.5 years.

A jumper, labeled IBE (Internal Battery Enable), must be in place to connect the battery to the RAMs. The jumper may be removed to conserve battery life during shipment or long storage periods.

5.0 INSTALLATION

The PC Support Module must be installed in the Master Rack. Expansion racks are used for AC and DC Input/Output modules.

The Master Rack is physically keyed to prevent modules from being inserted incorrectly.

IMPORTANT

ENSURE THAT POWER TO THE CARD RACK IS OFF BEFORE INSERTING OR REMOVING THIS OR ANY MICRO-COMPUTER MODULE. Failure to do so may result in permanent damage to the module.

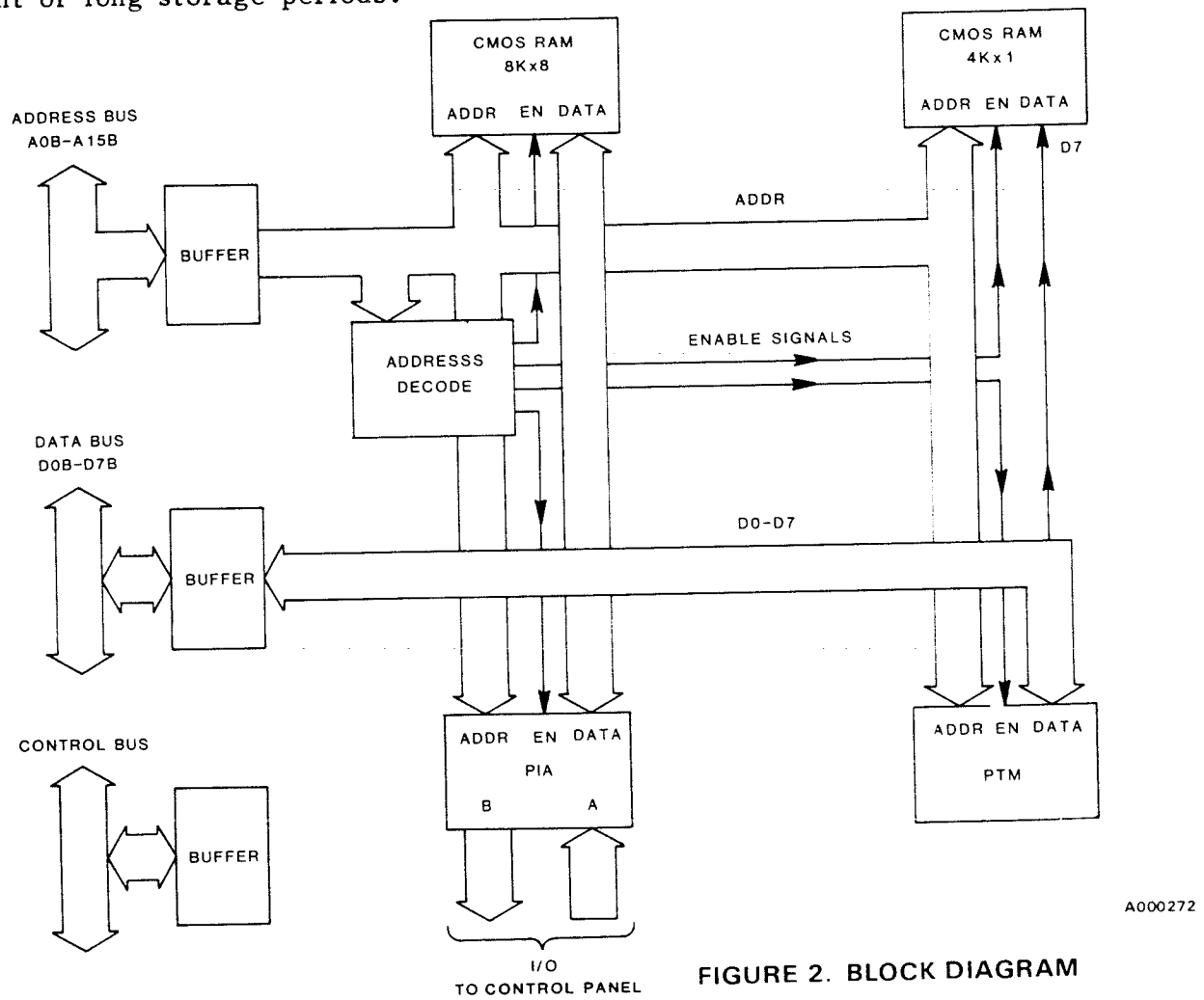

FIGURE 2. BLOCK DIAGRAM

PC SUPPORT MODULE

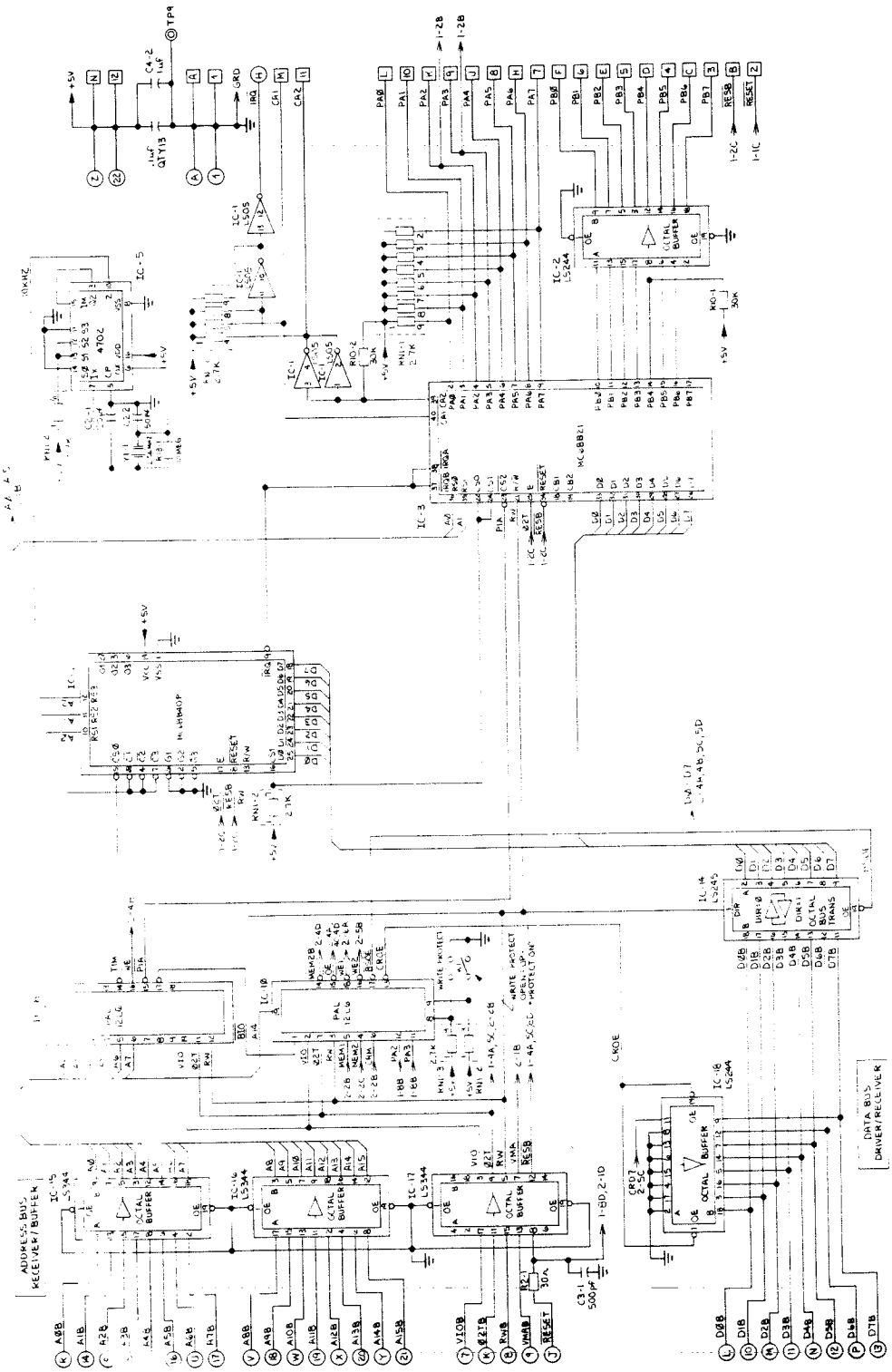

502-03195-00

FIGURE 3. SCHEMATIC

PC SUPPORT MODULE

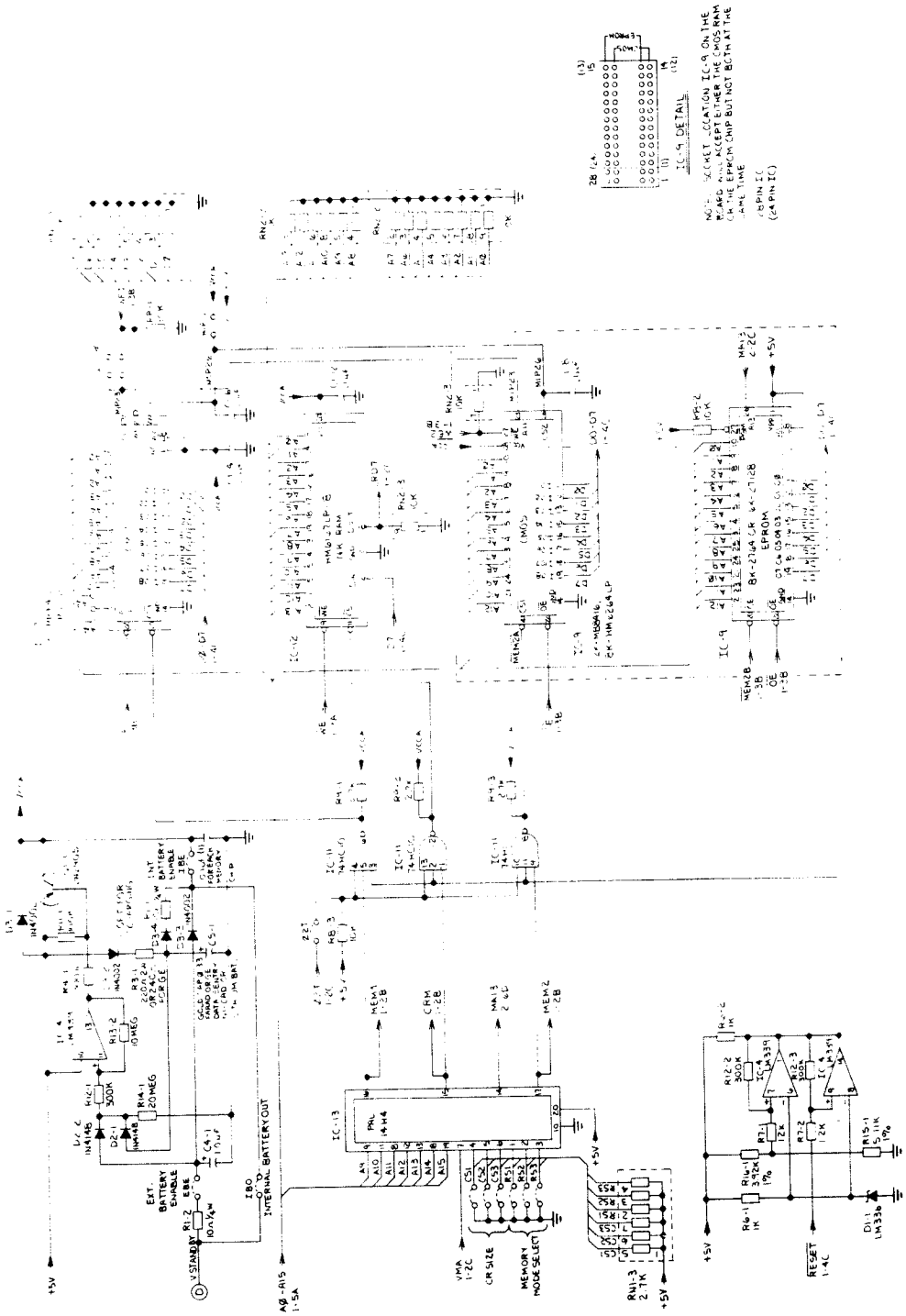

502-03195 00

FIGURE 3. SCHEMATIC (cont.)

PROGRAMMER'S CONSOLE MODULE

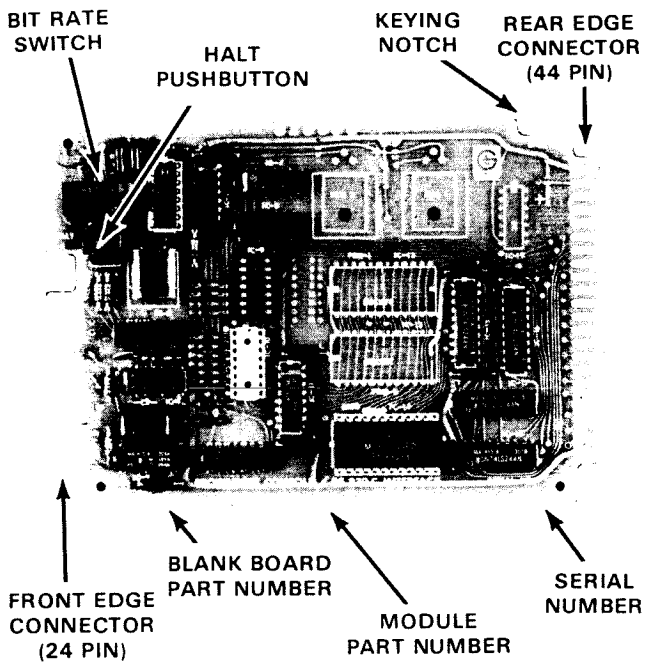

FIGURE 1. PROGRAMMER'S CONSOLE MODULE

1.0 INTRODUCTION

The Programmer's Console Module (part 502-02871-20) allows the user to communicate with the system through a serial "terminal". The data rate is selectable from 50 to 19,200 bits per second in fourteen steps.

Various features, useful in the development and testing of software and in the operation of the Programmable Controller, are available.

External devices are wired to the module through a 24-pin card edge connector.

The Programmer's Console Module must be located in the Master Rack.

2.0 BIT RATE SELECTION

2.1 ON-BOARD BIT RATE SWITCH

A sixteen-position, screwdriver-actuated switch is located near the front edge of the module for bit rate selection. See TABLE 1 for the various Bit Rate Switch positions and corresponding bit rates.

TABLE 1. BIT RATE vs SWITCH POSITION

BIT RATE	SWITCH POSITION
50	13
75	12
110	0
134.5	11
150	1
200	10
300	2
600	9
1200	4
1800	5
2400	3 OR 8
4800	6
9600	7
19200	14 OR 15

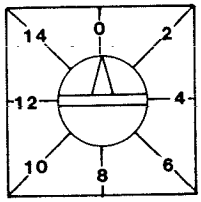

FRONT VIEW

2.2 EXTERNAL BIT RATE SWITCH

An external switch may be connected to the module to remotely control the bit rate. If an external Bit Rate Switch is used, the board-mounted Bit Rate Switch must be set to position 0. A 24-pin card edge connector, part 401-50656-00, may be wired as shown in FIGURE 2.

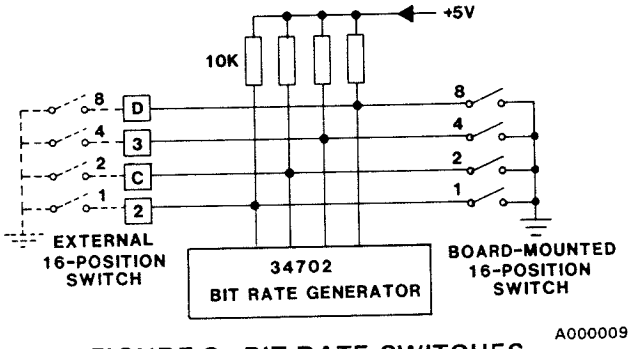

FIGURE 2. BIT RATE SWITCHES

2.3 RECEIVE BIT RATE CONNECTION

The RECEIVE bit rate is normally the same as the TRANSMIT bit rate. Therefore, a jumper is present between pins N and 12 of the card edge connector to supply the RECEIVE circuit with clocking pulses from the bit rate generator (see FIGURE 3). Some applications use a self-clocking cassette system, or other device, which supplies a separate receive bit rate clock. In this case, the jumper is deleted and the external clock source is connected to pin 12. The frequency of the external clock must be sixteen times the desired bit rate.

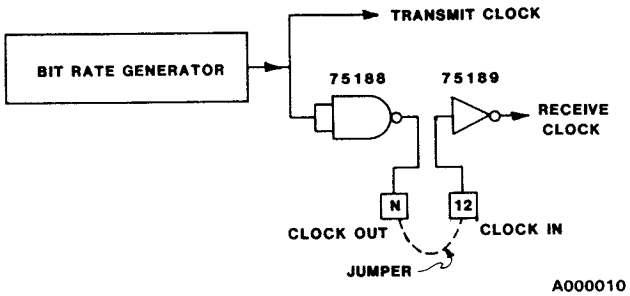

FIGURE 3. RECEIVE BIT RATE CONNECTION

3.0 TERMINAL CONNECTIONS

3.1 MODULE NOMENCLATURE

FIGURE 4 illustrates the circuitry and pin designations used for modem and terminal communications. Wiring is done via a 24-pin card edge connector, part 401-50656-00. Phospher-bronze crimp contacts, with gold-over-nickel plating, are available as part 401-50460-00. "Dummy" contacts, part 401-50459-00, may be inserted into the connector at unused places for improved holding power.

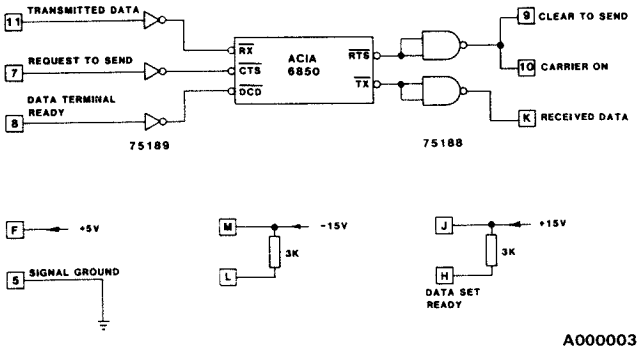

FIGURE 4. MODEM & TERMINAL CONNECTIONS

The nomenclature in FIGURE 4 shows the module as a modem or "data set". The communications device is designated a "data terminal".

3.2 INTERCONNECTION CABLE

An interconnection cable typically has a 24-pin card edge connector at one end for the Programmer's Console Module, and a 25-pin "D" plug or socket for the terminal. See FIGURE 5 for the card edge wiring. A "D" plug is available as part 401-50453-00. Pins are part 401-50451-00. A "D" socket is available as part 401-50454-00. Pins are part 401-50450-00.

The "D" connector is usually wired as follows: Pin 2, TRANSMIT DATA; Pin 3, RECEIVE DATA; Pin 7, GROUND; and Pin 20, DATA TERMINAL READY. Pins 2 and 3 may be reversed in some devices.

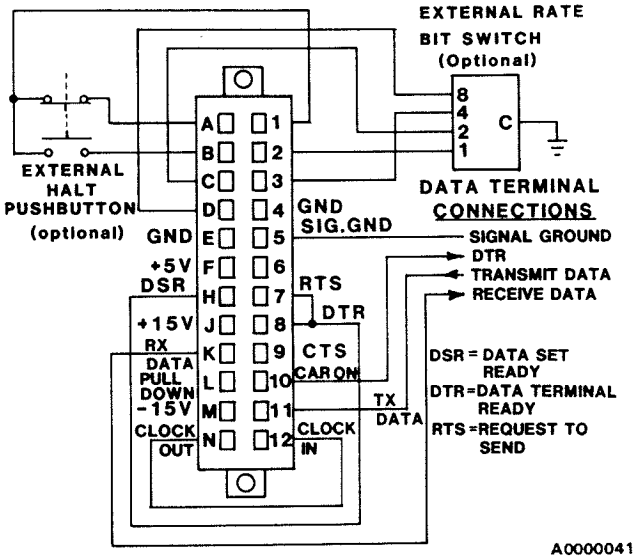

FIGURE 5. CARD EDGE CONNECTOR WIRING

4.0 HALT PUSHBUTTON/NMI

The Halt Button, when momentarily depressed, creates a Non-Maskable Interrupt (NMI) to the microprocessor.

When using PKOS, the NMI pointer is automatically set to a "single step" routine. This routine is useful in tracing the flow of a program.

An external Halt Button may be connected to the module to duplicate the function of the on-board Halt Button. If the external Halt Button is desired, it may be wired as shown in FIGURE 5.

5.0 INSTALLATION

Programmer's Console Modules must be installed in the Master Rack. The racks

are physically keyed to prevent modules from being inserted incorrectly. Make wire connections and fasten the card edge connector before applying power.

IMPORTANT

ENSURE THAT POWER TO THE CARD RACK IS OFF BEFORE INSERTING OR REMOVING THIS OR ANY MICRO-COMPUTER MODULE. Failure to do so may result in permanent damage to the module.

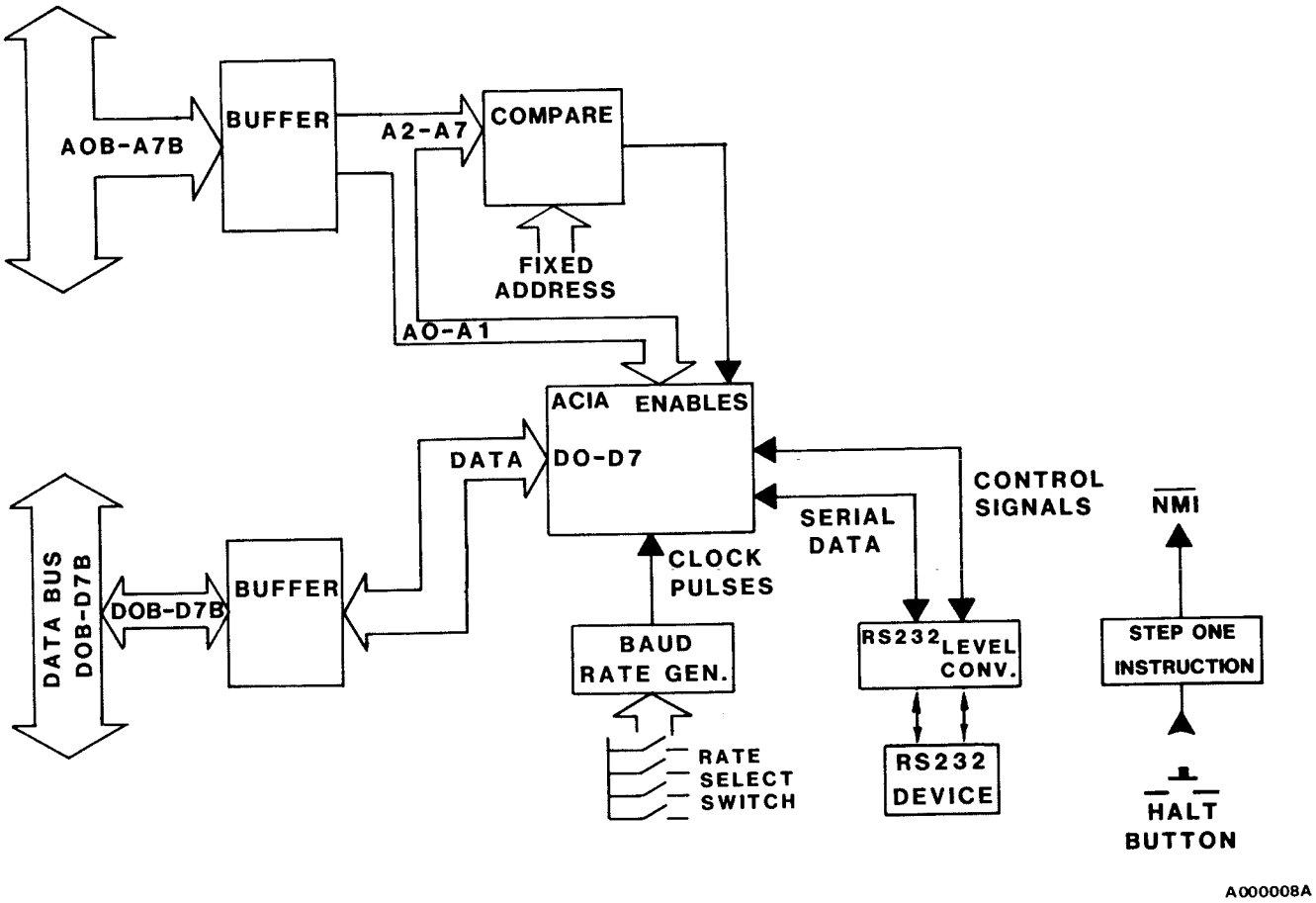

FIGURE 6. BLOCK DIAGRAM

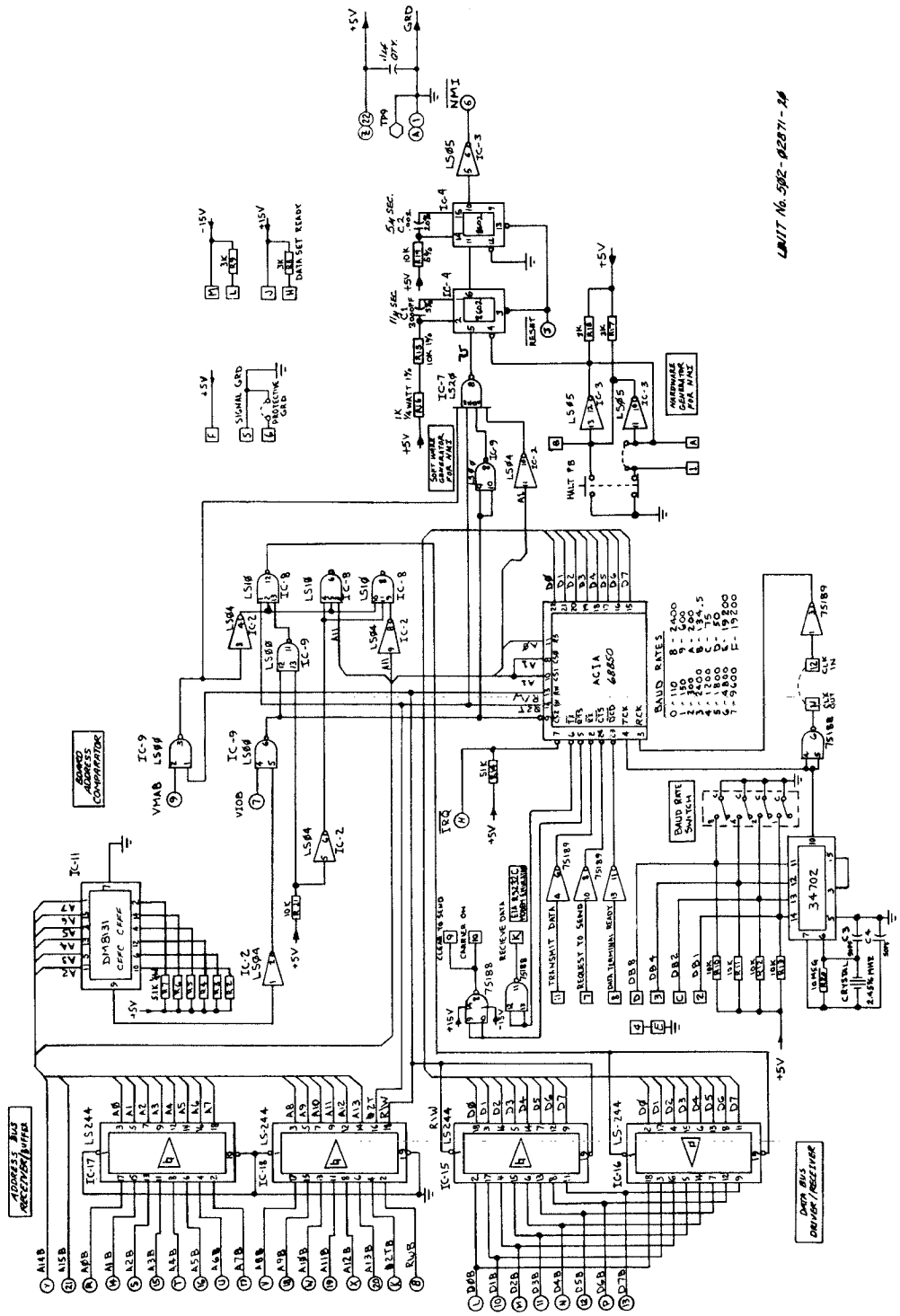

FIGURE 7. SCHEMATIC

COMPILER MODULE

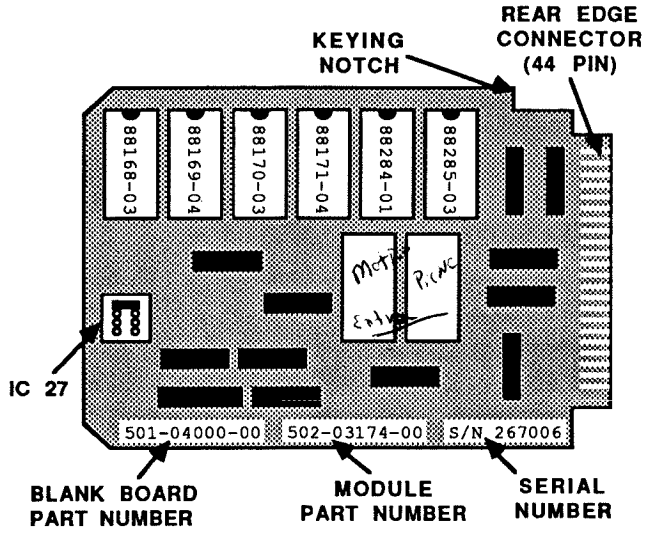

FIGURE 1. COMPILER MODULE

1.0 INTRODUCTION

The Compiler Module has eight 28-pin sockets that are populated with 8K byte EPROM devices (1K=1024). The 8K byte EPROM devices are factory programmed with the basic software needed to program, run, and troubleshoot the PiC. Some of the basic programs are:

1. Programmer Keyboard Operating System (PKOS): Provides the ability to monitor/ modify hexadecimal data.

2. LDN Compiler: Translates a Ladder Diagram Network (LDN) into computer-operating instructions.

3. Real Time Debug (RTD): Provides diagnostic facilities for system design and maintenance.

4. Message Formatter: Enables entry and editing of video messages.

5. EPROM Programmer: Facilitates copying of data from PiC memory onto EPROM devices.

6. AUX 1 Support: Provides remote control capability.

7. Diagnostics: User memory, control relay memory, power on, and I/O module address detect.

The Compiler Module may have up to 64K bytes of EPROM, but the amount of system memory used by the Compiler Module is only 4K bytes. The segment select feature provides the ability to address up to 64K bytes of physical memory while using only 4K bytes of system memory.

NOTE

The Compiler Module is only one configuration of the Multi-Memory Module. Jumpers are factory-placed on the appropriate patch plugs to configure the Multi-Memory Module. A jumper must be across the uppermost socket in IC 27 as shown in Figure 1. Other configurations of the Multi-Memory Module allow for other types and sizes of memory devices.

2.0 ADDRESSING

The Compiler Module occupies 4K bytes of memory. The starting (lowest) address of the Compiler Module is fixed at 56K. The 4K byte group of addresses after and including 56K are reserved. Another module with the same address may not be addressed within the reserved area.

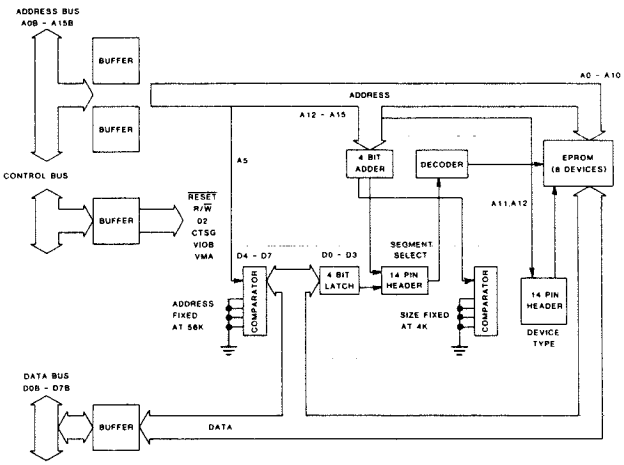

FIGURE 2. BLOCK DIAGRAM

3.0 INSTALLATION

The Compiler Module must be installed in the Master Rack. The rack is physically keyed to prevent modules from being inserted incorrectly.

4.0 UPDATE INFORMATION

An updated version of the PiC Compiler Module was released for production in mid-1987 A number of significant changes were made to the Compiler Module that the user should be aware of. A Compiler Module that contains EPROMs with the part numbers listed below has been updated. Please check the EPROM part numbers on your PiC Compiler Module to determine if this update notice applies to the Compiler Module in your system.

An updated Compiler Module will contain EPROMs with the following part numbers:

Socket 1 - 502-03223-00
88168-03

Socket 2 - 502-03224-00
88169-04

Socket 3 - 502-03225-00
88170-03

Socket 4 - 502-03226-00
88171-04

Socket 5 - 502-52051-00
88284-01

Socket 6 - 502-52052-00
88285-03

Extra EPROMS for Motion & P.CNC

4.1 Compiler Update Features

1. When the PiC is powered up, the default port for all I/O is now the Terminal Port. Previously the default I/O port was the Loader Port.

2. Diagnostics may now be run from the diagnostic menu while the loader mode switch is set at 19.2K baud. When this was attempted in the past, the diagnostics did not perform correctly.

3. A Call statement that contains more than 7 parameters can now be successfully moved within the LDN. Previously, moving such a Call statement resulted in parameters beyond the seventh one getting lost in the move.

4. Real Time Debug (RTD) will now support the FLUKE touch screen. Maximum baud is 4800.

5. The message formatter will no longer allow the entry of a "$FF" as part of a message. This is because a "$FF" is an end of message terminator.

6. The Compiler Module now has the capability of recording the I/O Module Address Table. See Section 12 of the PiC409 Family Programmer's Manual for more information regarding this capability.

7. The display menus have been changed so they all have the same format. Each menu now prompts the user with SELECT (1-?).

8. The Compiler checksum test performed during power-on diagnostics has been corrected so the test is no longer done on empty EPROM sockets.

9. The I/O Module Address Test software was added to the Compiler Module. The use of the Address Test is described in Section 12 of the PiC409 Family Programmer's Manual.

SCAN MONITOR MODULE

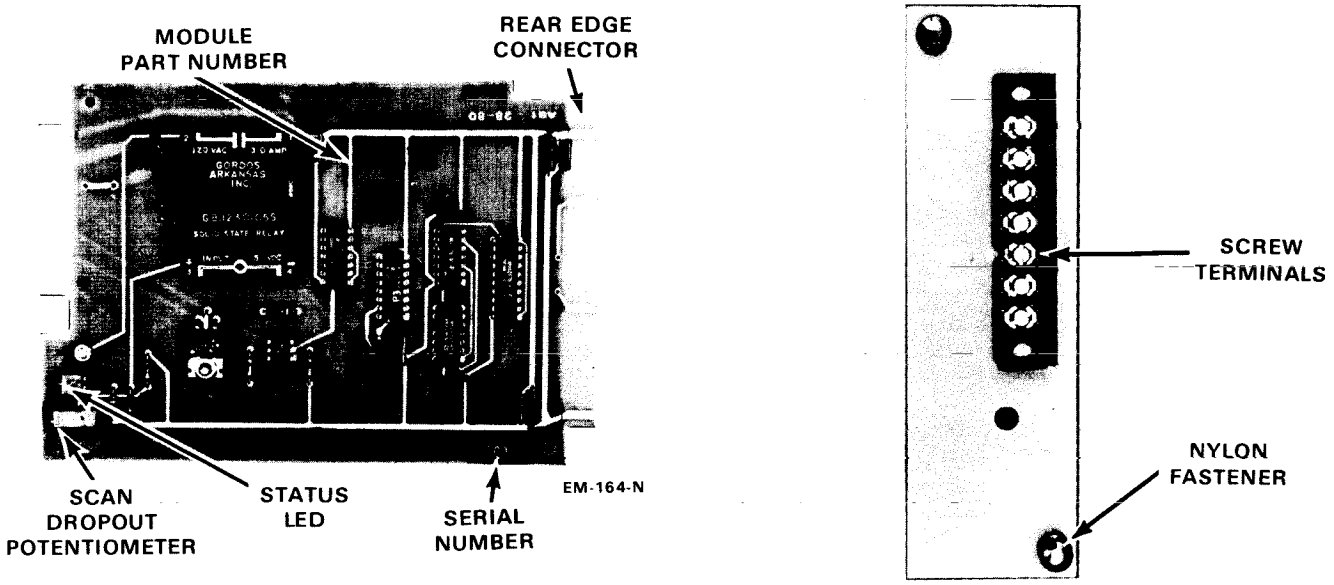

FIGURE 1. SCAN MONITOR MODULE AND OPTIONAL FACEPLATE

1.0 INTRODUCTION

The Scan Monitor Module, part number 502-02906-00, monitors the PiC for proper operation. The ladder diagram network (LDN) scan is monitored so that excessive scan times can be detected . The module's timing circuitry controls an AC output circuit and a DC output circuit. Both of these circuits will open if the scan times exceed a preset limit.

The output circuits may be wired to a power on relay, horn, light etc., to indicate that the scan time has exceeded the maximum time limit. An on-board LED is also provided to indicate the scan status. The LED will be illuminated when the scan is normal. A scan fault will turn the LED off.

The scan time limit is adjustable by means of an on-board potentiometer. The maximum allowable scan time is adjustable from 5 to 230 milliseconds. Turning the potentiometer in a clockwise direction will reduce the maximum allowable scan time. Turning it in a counter-clockwise direction will increase the maximum allowable scan time.

External devices are wired to the module through either a 24-pin card edge connector or a Scan Monitor Module Faceplate (part number 502-03205-00). The latter option permits wiring connections to be made to compression screw terminals.

2.0 HARDWARE INTERFACING

2.1 CARD EDGE CONNECTOR

A 24-pin card edge connector, part number 401-50656-00 may be used to connect the Scan Monitor Module to external devices. Phosphor bronze, crimp contacts, with gold-over-nickel plating, are available as part number 401-50495-00. "Dummy" contacts, part number 401-50459-00 may be inserted into the connector at unused places to provide a tighter grip between the connector and the module card edge.

The recommended external wiring is as follows: 120 Volts AC line (IN) and load (OUT) should be wired with #18 red conductors; 24 volts DC LINE (IN) and LOAD (OUT) should be wired with #18 blue conductors.

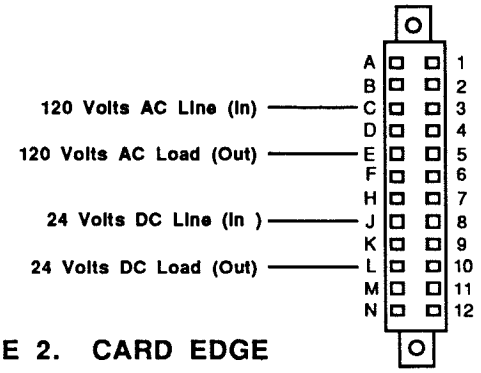

FIGURE 2. CARD EDGE CONNECTOR WIRING

2.2 FACEPLATE CONNECTOR

The faceplate connector allows wiring connections to be made to compression terminals. The System Status LED on the Scan Monitor Module may be viewed thought the faceplate LED hole.

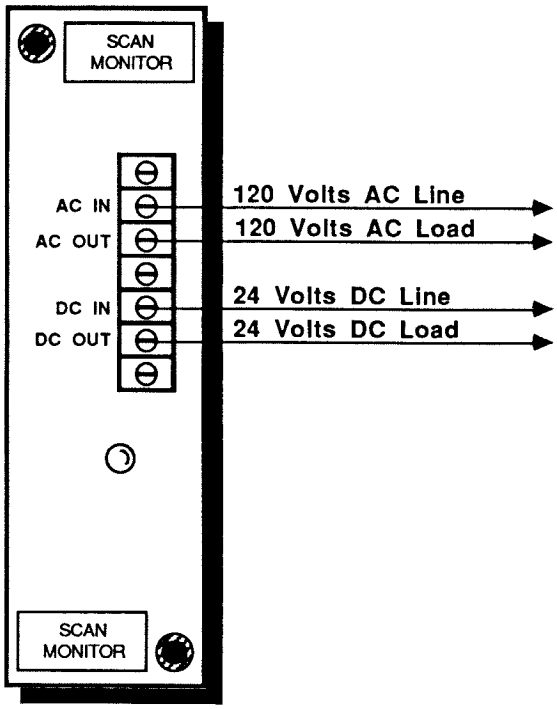

FIGURE 3. FACEPLATE WIRING

3.0 INSTALLATION

IMPORTANT

ENSURE THAT POWER TO THE CARD EDGE IS OFF BEFORE INSERTING OR REMOVING THIS OR ANY OTHER MICROCOMPUTER MODULE. Failure to do say may result in permanent damage to the module.

The Scan Monitor Module may be installed in either the Master or Extension Racks. The racks are physically keyed to prevent modules from being inserted incorrectly.

4.0 APPLICATION EXAMPLES

Figure 4 illustrates one wiring configuration for incorporating the Scan Monitor Module in the PiC system. The DC Output Module supplies 24 volts DC from LOAD 0 to the DC IN terminal of the Scan Monitor Module. The 24 volts DC is passed through the Scan Monitor Module to the DC OUT terminal. The 24 volt DC OUT terminal is wired directly to the machine on/off switch, emergency stop switch, machine start switch, power-on relay and the power-on relay contact.

In the event that the scan time exceeds the maximum allowable limit, the DC output circuit of the Scan Monitor Module will open. An open DC output circuit will disconnect the 24 volt DC source to the power-on relay. A de-energized power-on relay will disconnect power to all devices that use the power-on relay as the contact for electrical power.

Additional control of the power-on relay is available through the ladder diagram network. Control relays, switches and coils may be programmed to control LOAD 0 of the DC Output Module.

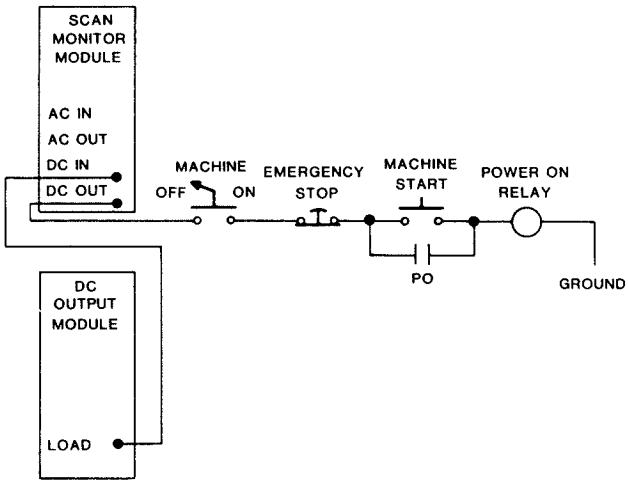

FIGURE 4. EXAMPLE CIRCUIT

SCAN MONITOR MODULE

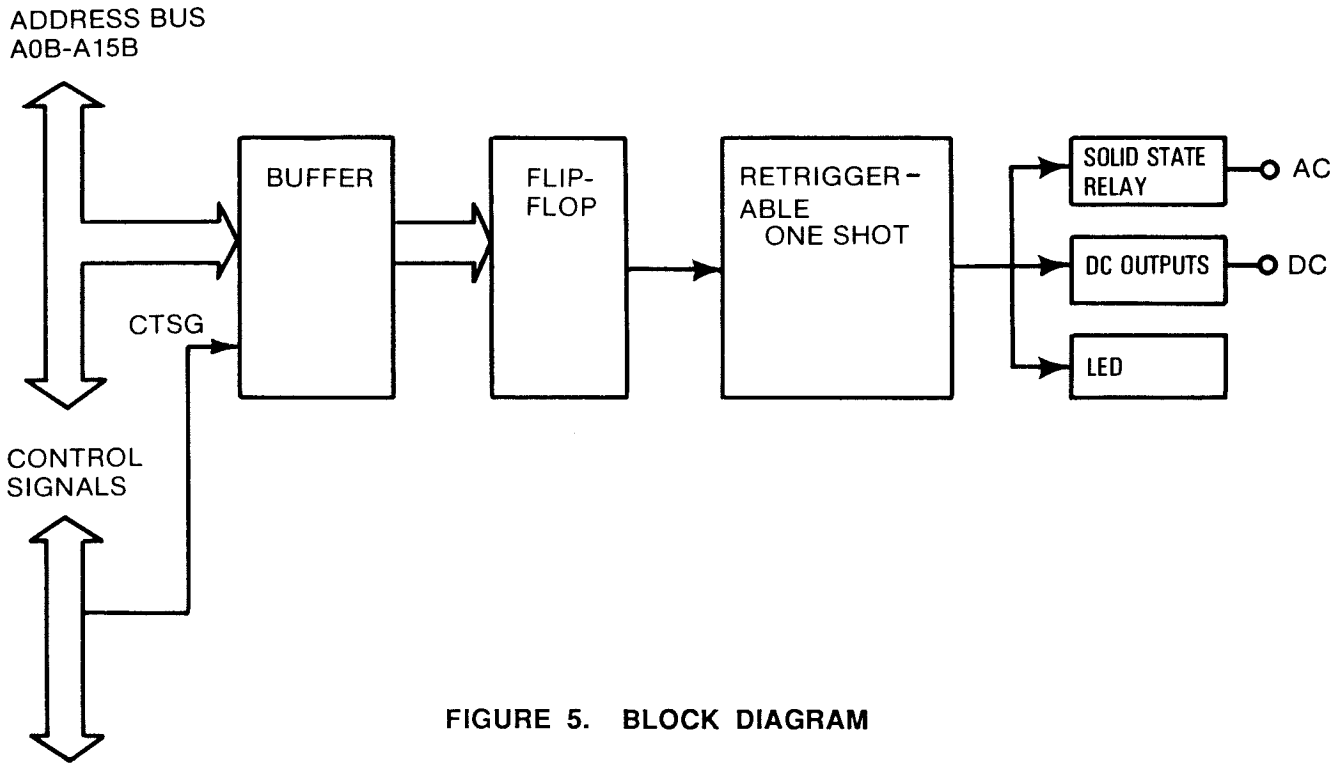

FIGURE 5. BLOCK DIAGRAM

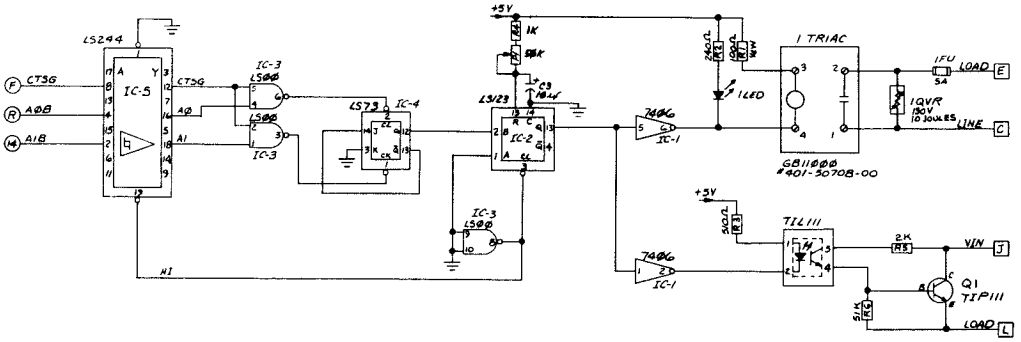

FIGURE 6. SCHEMATIC

FLOATING POINT ARITHMETIC MODULE

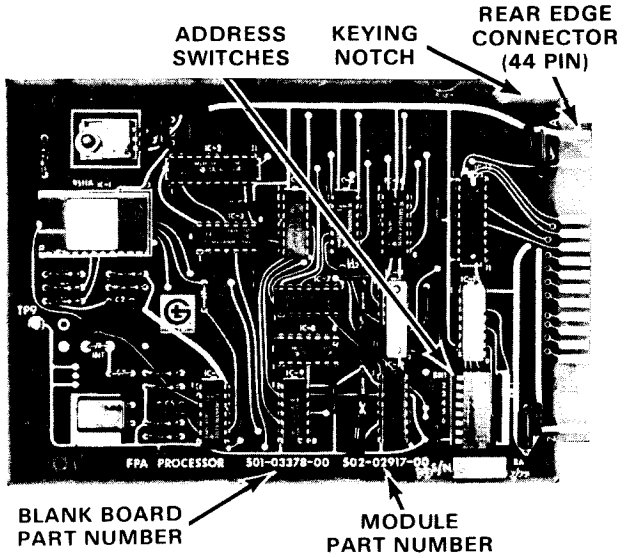

FIGURE 1. FPA MODULE

1.0 INTRODUCTION

The Floating Pount Arithmetic (FPA) Processor Module provides the capability of performing 16-bit and 32-bit fixed point arithmetic, 32-bit floating point arithmetic and a variety of floating point trigonometric and mathematical operations. The microcomputer on the 6809 CPU module interfaces with the arithmetic processing unit (APU) on the FPA Processor Module via Call Routines to utilize the computational power of the APU. In addition to having enhanced computational power, the FPA Processor Module reduces the software overhead that would be required if the 6809 CPU Module had to perform the enhanced arithmetic operations.

2.0 ADDRESSING

The FPA Processor Module occupies four memory locations. The eight board-mounted Address switches must be set for the lowest of the four addresses desired. Table 1 contains the Address switch settings for the 60 possible beginning address points. Switches 7 and 8 are not used and may be ignored.

NOTE

For most applications the default address will be 2148 (1-off, 2-on, 3-off, 4-on, 5-on, 6-off). Also, with the FPA Processor Module at this address, LET statements will be executed faster in the LDN without the aid of Call Routines.

The only time that address 2148 is not used is when a specific Call Routine requires a different address. When using an FPA Processor Module in conjunction with Call Routines, refer to the Call Routine documentation for specific addressing instructions.

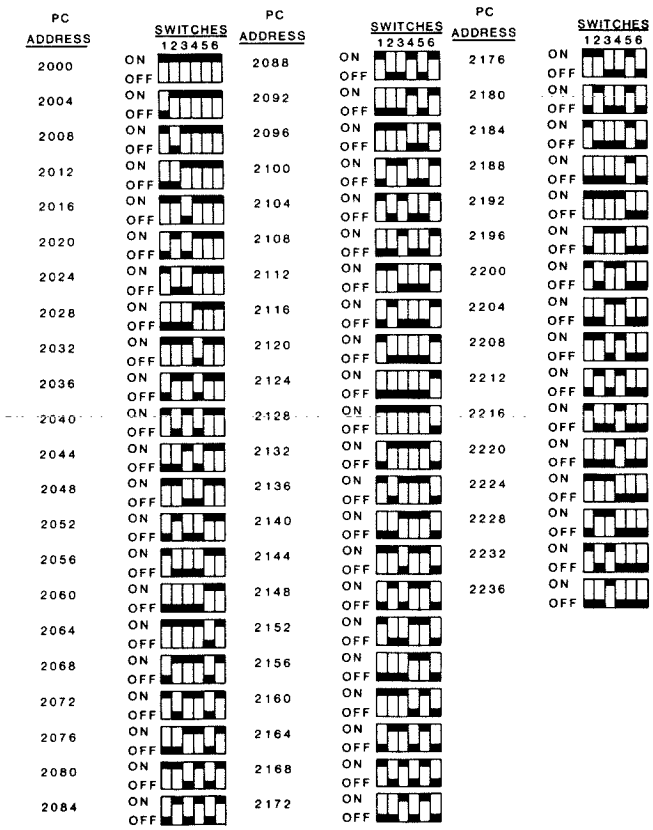

TABLE 1. ADDRESS SWITCH SETTINGS

3.0 INSTALLATION

The FPA Processor Module may only be installed in the Master Rack. Extension Racks are used for AC and DC input/output modules only.

The Master Rack is physically keyed to prevent modules from being inserted incorrectly. Set the address switches as described in Section 2.0 before installing the module.

IMPORTANT

ENSURE THAT POWER TO THE RACK IS OFF BEFORE INSERTING OR REMOVING THIS OR ANY OTHER MICROCOMPUTER MODULE. Failure to do so may result in permanent damage to the module.

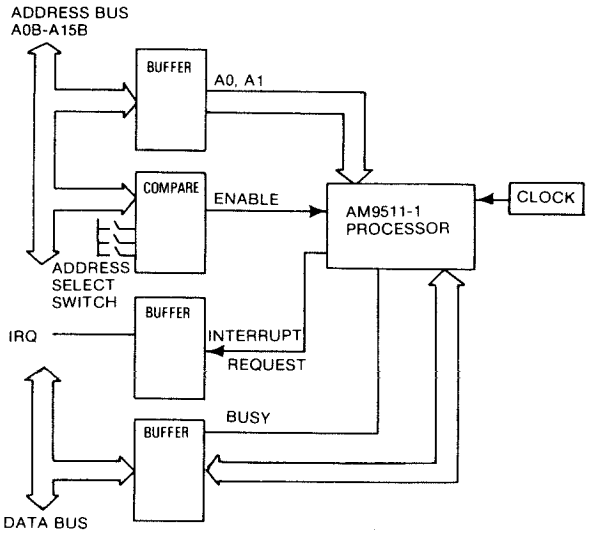

FIGURE 2. BLOCK DIAGRAM

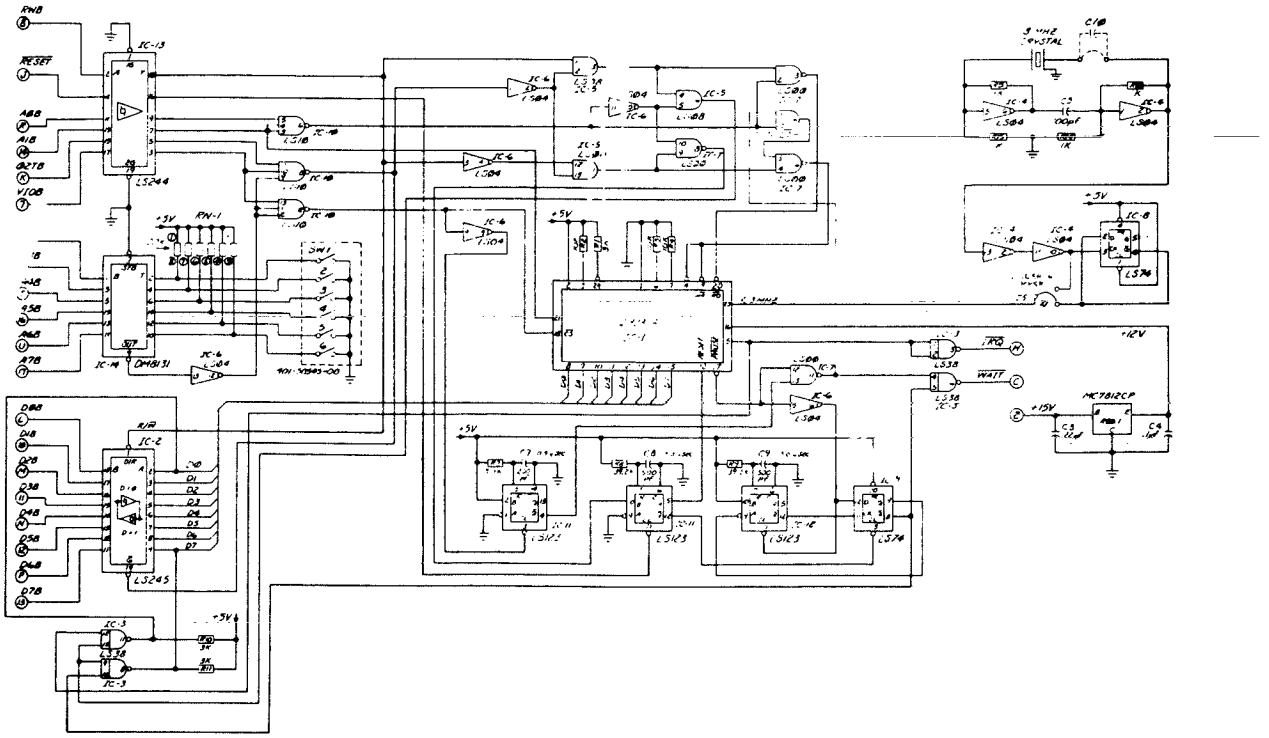

FIGURE 3. SCHEMATIC

2K/4K/8K CMOS RAM MODULE

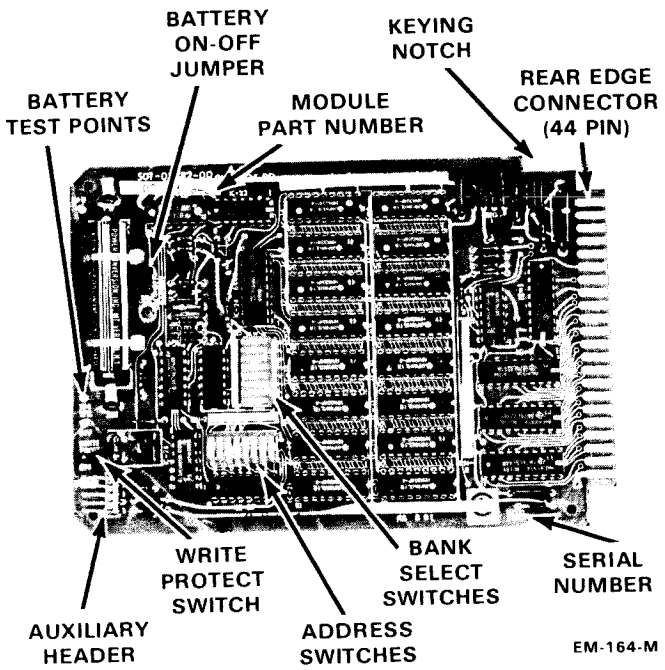

FIGURE 1. 8K CMOS RAM MODULE

1.0 INTRODUCTION

CMOS RAM Modules provide battery-backed read/write memory to the programmable controller. Modules are available in three forms:

2K Memory Size, Part 502-02998-22
4K Memory Size, Part 502-02998-24
8K Memory Size, Part 502-02998-28

An on-board lithium battery ensures the integrity of stored data during power outages. The module is fully buffered from the microcomputer bus. Also, the module features switches for address selection, bank selection and write protection.

2.0 ADDRESSING

Each CMOS RAM Module can occupy 2,048, 4,096 or 8,192 memory locations, depending on the size purchased. Seven, board-mounted, Address Switches must be set for the lowest address of the 2K, 4K or 8K group desired.

TABLE 1 contains the "B" switch settings for:

(1) The 32 possible 2K groups;
(2) The 16 possible 4K groups; and
(3) The 8 possible 8K groups.

Note that Switch 8 is not used and may be ignored.

NOTE

The PC409 can accommodate up to 40K bytes of user memory beginning at 8K. The address switch settings below 8K and at 48K or above are not for use with the PC409.

TABLE 1. ADDRESS SWITCH SETTINGS

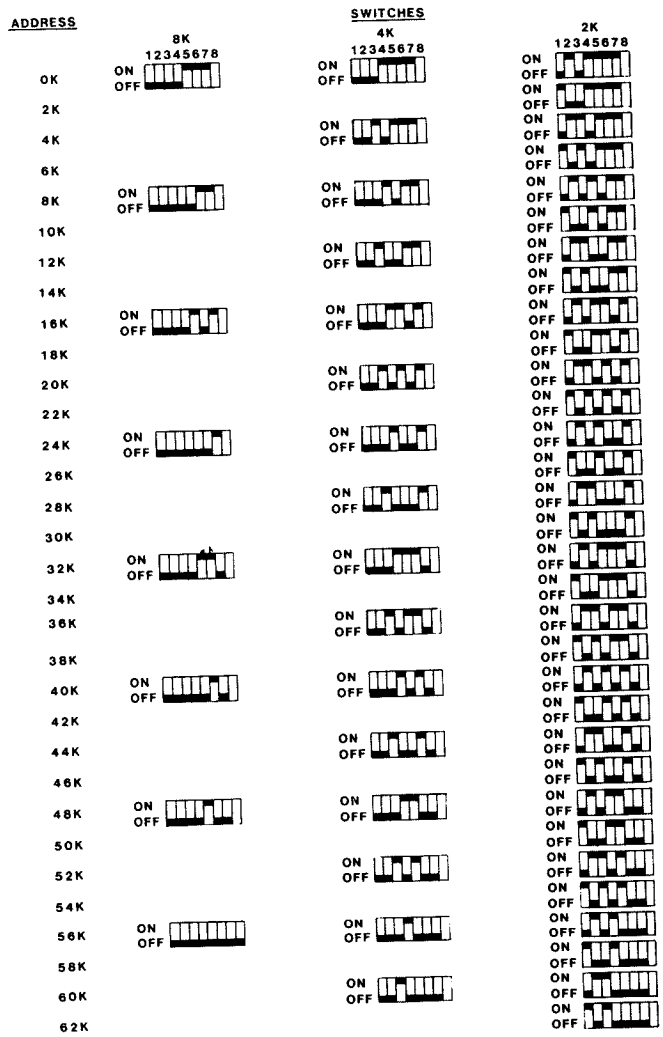

GIDDINGS & LEWIS ELECTRONICS

2K/4K/8K CMOS RAM MODULE

The installation of a 2K, 4K or 8K CMOS RAM Module reserves the entire 2K, 4K or 8K group of addresses. Another module may not be addressed within any part of the reserved area.

CMOS RAM Modules may only be installed in the Master Rack. Extension Racks are used for AC and DC Input/Output modules.

3.0 BANK SELECT

The Bank Select feature allows the user to expand system memory capacity by placing up to eight, 8K, CMOS RAM modules in the same address area. The boards are selectively enabled or disabled through user software.

The banks to which a particular board will respond depend upon which switch handles on dipswitch "A" are closed (ON). Closing #1, for example, places a board in bank 1; closing #1, #2 and #3 will place the board in all three banks.

A system reset will automatically select bank 1, so Bank Select Switch #1 should be closed on any boards expected to be active after a reset.

4.0 WRITE PROTECTION

A Write Protect Switch is located near the front edge of the CMOS RAM Module. Placing the Write Protect Switch in the ON position (handle down) causes the contents of the memory to be safeguarded from change via the CPU. Placing the Write Protect Switch in the OFF position (handle up) permits the CPU to change data in the module.

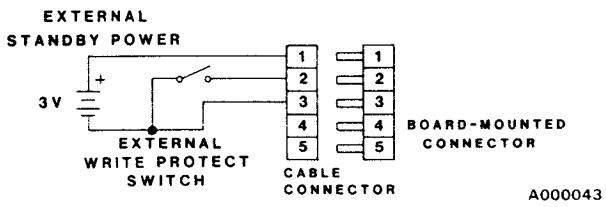

FIGURE 2. AUXILIARY HEADER WIRING

If a remotely-mounted Write Protect Switch is desired, make wiring connections as shown in FIGURE 2. When using the remote switch, the on-board switch must be in the ON position.

5.0 STANDBY BATTERY

An on-board lithium cell ensures the integrity of stored data during outages of commercial power. Due to the extremely low current drain of the RAM, battery life expectancy is rated at 2.5 years. Since a failed CMOS device can draw excessive current and shorten the life of the battery, provisions have been made to check battery drain. To monitor the current, connect a VOM (with a millivolt range) to TP1 (-) and TP2 (+). The number of millivolts read is directly proportional to the number of microamps flowing; 50 uA or less is correct. Remove the plug-in jumper from the "ON" position and place it in the "OFF" position to conserve the battery during shipment or long storage periods.

CAUTION

The on-board lithium battery is a primary cell. No attempt should be made to recharge it, as high internal temperatures and pressures could develop and cause bursting.

If desired, an external source of standby power (3 volts) may be wired to the module as shown in FIGURE 2.

6.0 AUXILIARY HEADER

A five-pin header plug is located near the front edge of the module for optional connections to an external Write Protect Switch and standby power source. The header plug may be wired as shown in FIGURE 2. Note that the connector is polarity-independent, since pins 2 and 4 may be interchanged and pins 1 and 5 may also be interchanged.

2K/4K/8K CMOS RAM MODULE

7.0 INSTALLATION

CMOS RAM Modules must be installed in the Master Rack. The rack is physically keyed to prevent modules from being inserted incorrectly. Set the Address Switches per the instructions in Section 2.0.

IMPORTANT

ENSURE THAT POWER TO THE CARD RACK IS OFF BEFORE INSERTING OR REMOVING THIS OR ANY MICRO-COMPUTER MODULE. Failure to do so may result in permanent damage to the module.

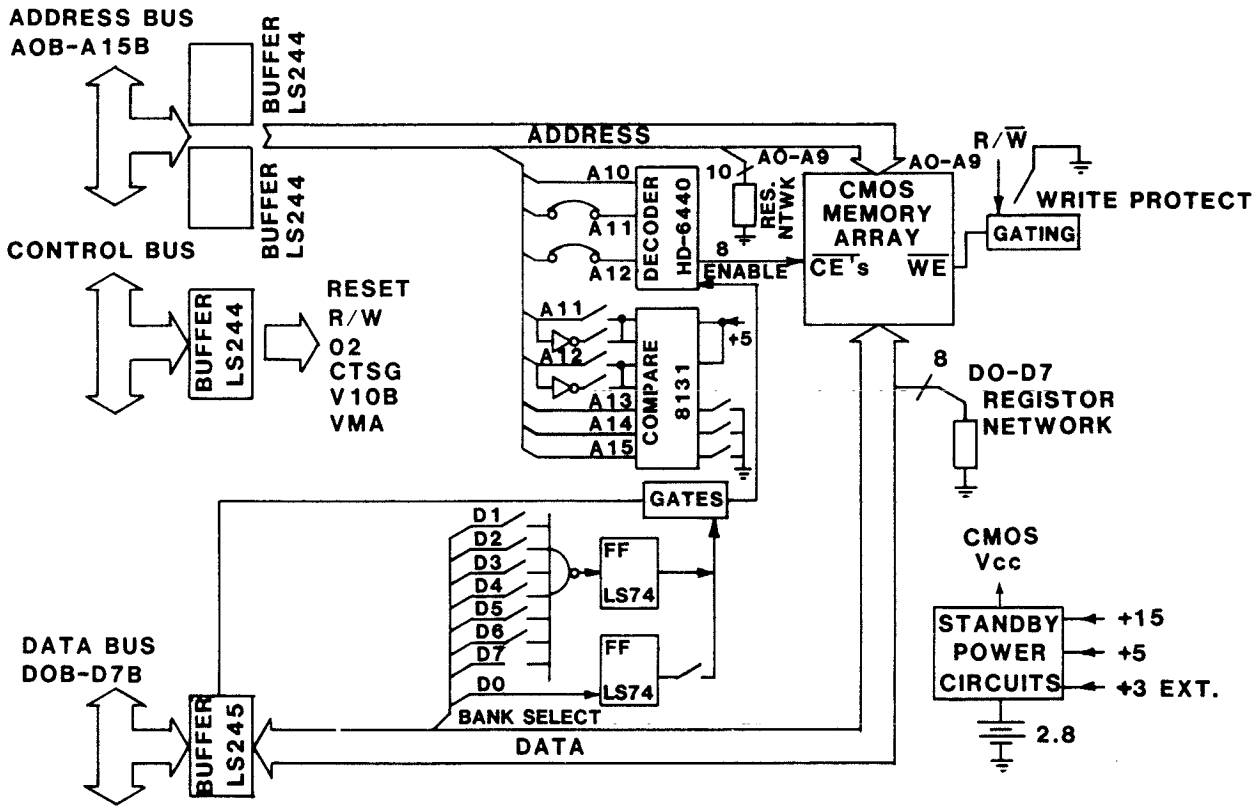

FIGURE 3. BLOCK DIAGRAM

A000079

2K/4K/8K CMOS RAM MODULE

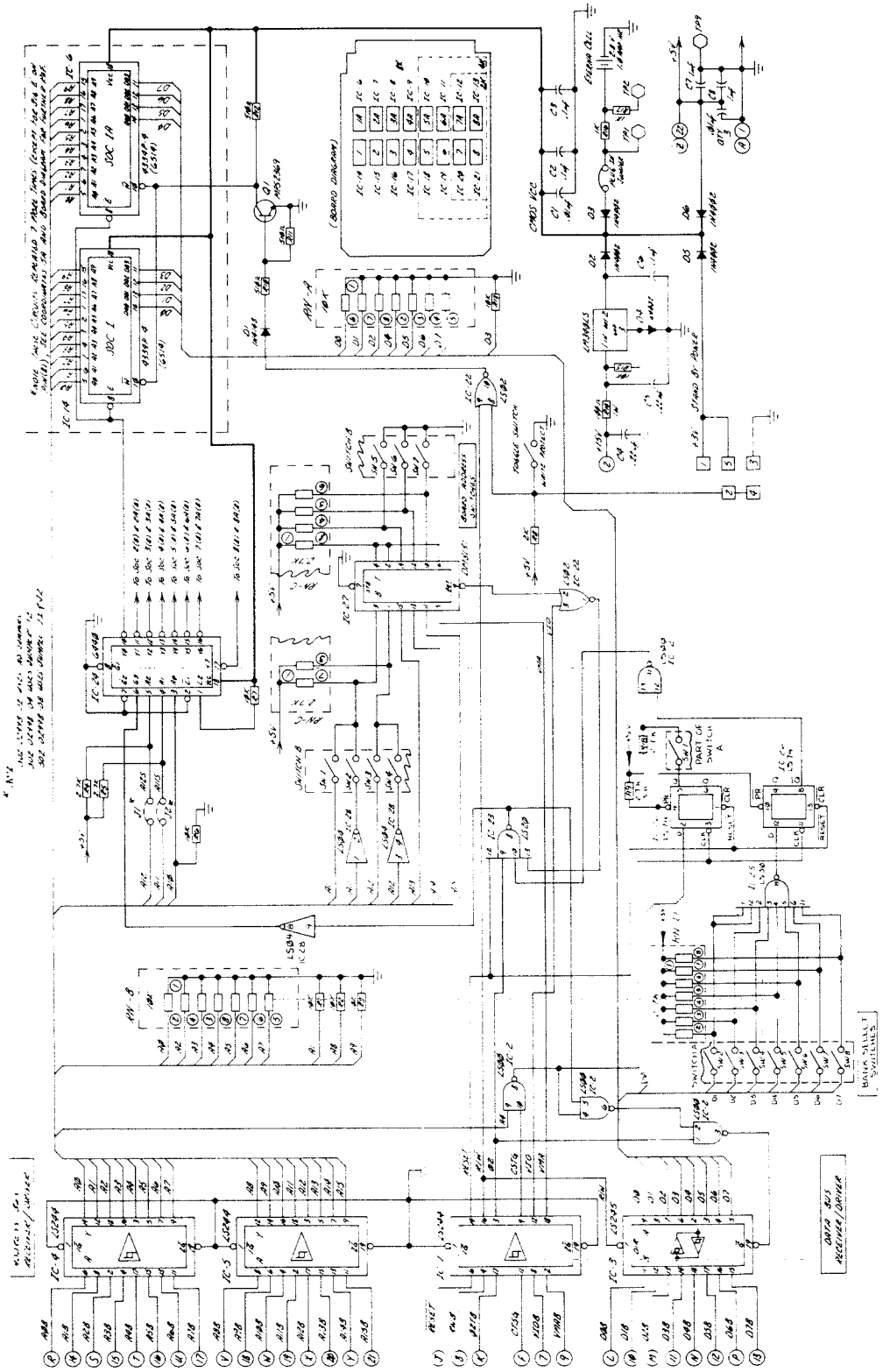

502-02998-28

FIGURE 4. SCHEMATIC

EPROM MODULE

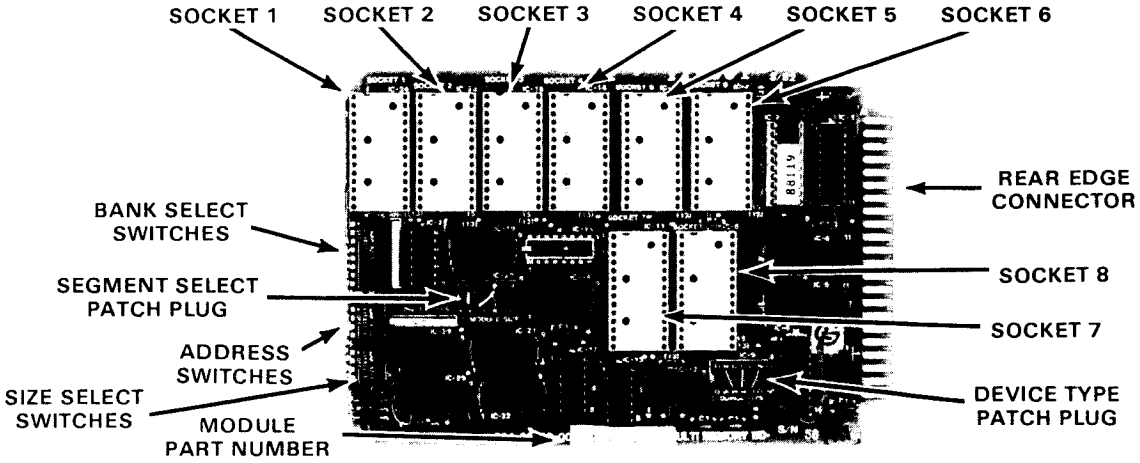

FIGURE 1. EPROM MODULE

1.0 INTRODUCTION

The EPROM Module has eight, 28-pin sockets that may be populated with 8K byte EPROM devices. This module is only available without EPROM devices installed. EPROM devices must be purchased separately (part number 401-51715-00) and programmed on an EPROM Programmer before being installed on the EPROM Module.

The EPROM Module may be populated with either 8K bytes, 16K bytes, 24K bytes, 32K bytes, 40K bytes, 48K bytes, 56K bytes or 64K bytes of EPROM. The Size Select Switches must be set to correspond to the amount of memory installed.

NOTE

The EPROM Module is only one configuration of the Multi-Memory Module. Jumpers have been placed on the segment select patch plug and the device type patch plug to configure the Multi-Memory Module as an EPROM Module. Other configurations of the Multi-Memory Module allow for other types and sizes of memory devices.

The EPROM Module is limited to a maximum of 60K bytes of addressable memory. Therefore, if 64K bytes of memory are installed on the EPROM Module, the last 4K bytes cannot be read.

The EPROM Module has a bank select feature. The bank select feature allows up to eight memory modules to be assigned to the same address. Bank Select Switches are provided on the EPROM Module to select the bank number.

2.0 SIZE SELECT

The four Size Select Switches must be set to indicate the amount of EPROM installed on the EPROM Module. TABLE 1 shows the eight possible Size Select Switch settings and the sockets into which the corresponding 8K byte EPROM devices should be inserted.

TABLE 1. SIZE SELECT SWITCHES

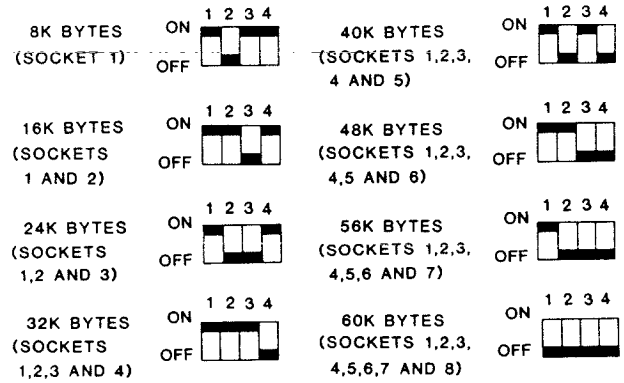

3.0 BANK SELECT

The bank select feature allows up to eight memory modules to be assigned to the same address. Different bank numbers (1-8) must be assigned to memory modules with the same address to differentiate the memory modules. Software that utilizes memory modules in different banks must specify both the address and bank number of the memory module to be utilized.

IMPORTANT

Ensure that memory modules with the same address are not configured to respond to the same bank number. An unexpected activity could occur if the improper memory module is utilized.

TABLE 2. BANK SELECT SWITCHES

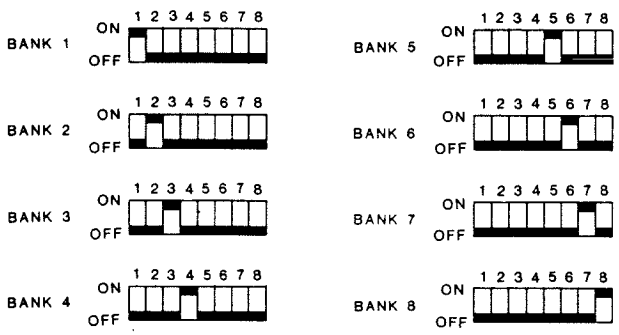

Eight Bank Select Switches are provided on the EPROM Module. The Bank Select Switches must be set to indicate the bank(s) to which the EPROM Module will respond. TABLE 2 shows how to set the Bank Select Switches when assigning an EPROM Module to a single bank (1-8). As TABLE 2 depicts, the number of the Bank Select Switch that is in the ON position is the same as the bank number to which the EPROM Module will respond. For example; when Bank Select Switch number 3 is in the ON position, the EPROM Module will respond to bank 3. If the EPROM Module is to respond to more than one bank, place the Bank Select Switches that correspond to each bank in the ON position. For example; if the EPROM Module should respond to banks 1, 3 and 6, Bank Select Switches 1, 3 and 6 must be placed in the ON position.

4.0 ADDRESSING

Each EPROM Module can occupy 8K, 16K, 24K, 32K, 40K, 48K, 56K or 60K bytes of memory (as determined by the Size Select Switches). The starting (lowest) address of the EPROM Module may be at any 4K byte boundary of available memory.

TABLE 3. ADDRESS SWITCH SETTINGS

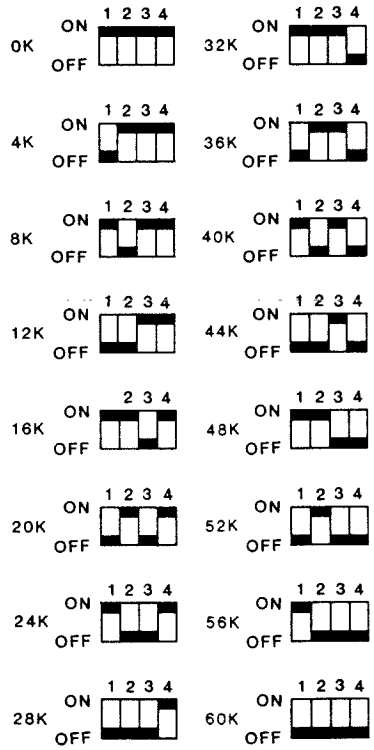

NOTE

The PC409 can accommodate up to 40K bytes of user memory. The size select switch settings above 40K are not for use with the PC409.

EPROM MODULE

The starting address of the EPROM Module is selected by four Address Switches. TABLE 3 shows the Address Switch settings for each of the possible 4K byte boundaries. All of the 4K byte groups occupied by an EPROM Module must be reserved. For example: If an EPROM Module with 24K bytes of EPROM is addressed to start at 12K, the 4K byte groups starting at 12K, 16K, 20K, 24K, 28K, and 32K must be reserved. No other modules with the same Bank Select Switch settings may be addressed within any part of the reserved area.

5.0 MEMORY DEVICE INSTALLATION

EPROM Modules without EPROM devices installed require that the user install the 8K byte EPROM devices. The access time of all EPROM devices installed on the EPROM Module cannot exceed 250 nanoseconds.

IMPORTANT

Electrostatic Discharge (ESD) will damage EPROM devices and other IC devices on the EPROM Module. Ensure that safeguards are taken to prevent ESD damage when installing EPROM devices.

6.0 INSTALLATION

IMPORTANT

ENSURE THAT POWER TO THE CARD RACK IS OFF BEFORE INSERTING OR REMOVING THIS OR ANY MICRO-COMPUTER MODULE. Failure to do so may result in permanent damage to the module.

The EPROM Module must be installed in the Master Rack. The rack is physically keyed to prevent modules from being inserted incorrectly. Set the Address Switches per the instructions in Section 4.0.

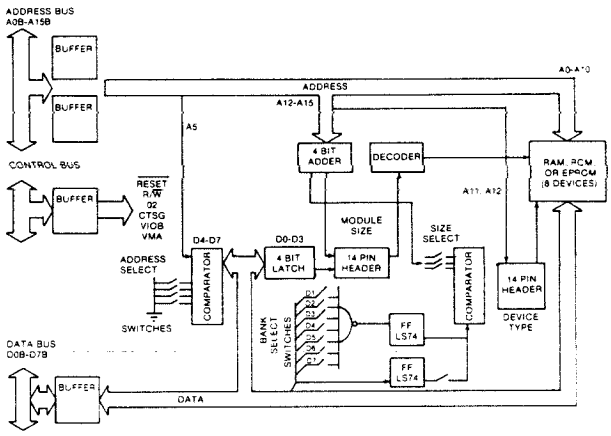

FIGURE 2. BLOCK DIAGRAM

STATIC RAM MODULE

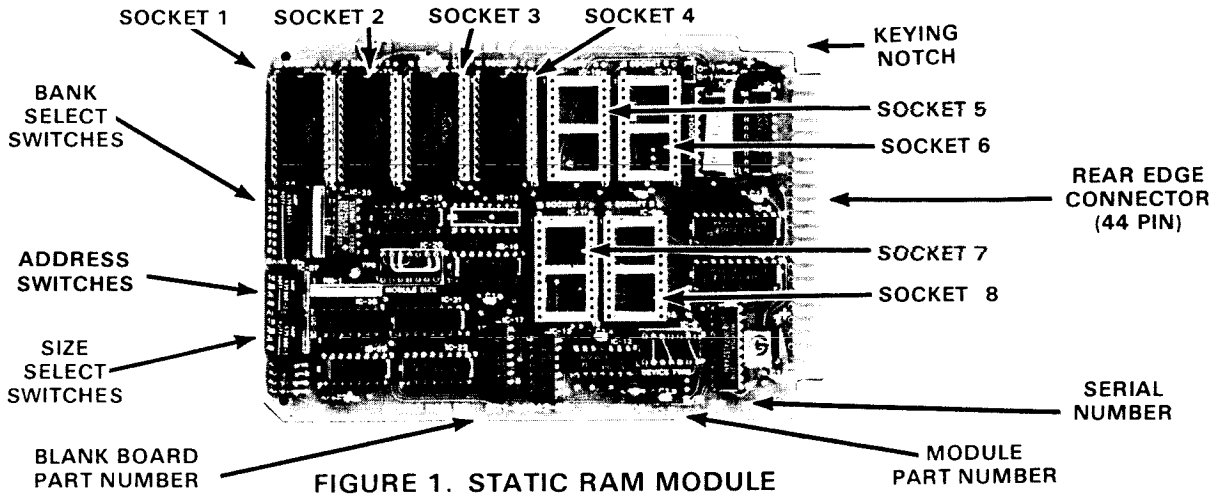

FIGURE 1. STATIC RAM MODULE

1.0 INTRODUCTION

The Static RAM Module has eight 28-pin sockets that may be populated with 2K byte static RAM devices (1K=1024). This module is available with or without static RAM devices installed.

Memory addresses for the Static RAM Module are allocated in 4K byte groups. Therefore, at least 4K bytes of static RAM must be installed. Also, additional static RAM must be installed in 4K byte increments. Either 4K bytes (two 2K byte devices), 8K bytes (four 2K byte devices), 12K bytes (six 2K byte devices), or 16K bytes (eight 2K byte devices) of static RAM may be installed on the Static RAM Module. The Size Select Switches must be set to correspond to the amount of memory installed.

Bank select may be used to assign up to eight memory modules (that have the bank select feature) to the same address. Bank Select Switches are provided on the Static RAM Module for selecting the bank number.

2.0 SIZE SELECT

The four Size Select Switches must be set to indicate the amount of static RAM installed on the Static RAM Module. TABLE 1 shows the four possible Size Select Switch settings and the sockets into which the corresponding 2K byte static RAM devices should be inserted.

TABLE 1. SIZE SELECT SWITCHES

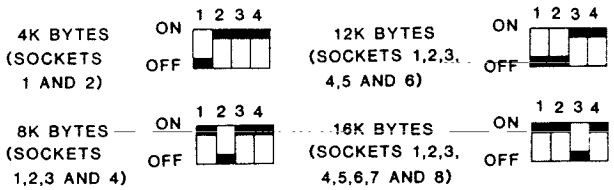

3.0 BANK SELECT

Bank select is a feature that allows expansion of system memory by a factor of eight. Bank select allows up to eight memory modules to be assigned to the same address. Different bank numbers (1-8) must be assigned to memory modules with the same address to differentiate the memory modules. Software that utilizes memory modules in different banks must specify both the address and bank number of the memory module to be utilized. One memory module may be configured to respond to more than one bank.

Eight Bank Select Switches are provided on the Static RAM Module. The Bank Select Switches must be set to indicate the bank(s) to which the Static RAM Module will respond. TABLE 2 shows how to set the Bank Select Switches when

STATIC RAM MODULE

IMPORTANT

Ensure that memory modules with the same address are not configured to respond to the same bank number. An unexpected activity could occur if the improper memory module is utilized.

assigning a Static RAM Module to a single bank (1-8). As TABLE 2 depicts, the number of the switch that is in the ON position is the same as the bank number to which the Static RAM Module will respond. For example; when Bank Select Switch number 3 is in the ON position, the Static RAM Module will respond to bank 3. If the Static RAM Module is to respond to more than one bank, place the switches that correspond to each bank in the ON position. For example; if the Static RAM Module should respond to banks 1, 5 and 6, Bank Select Switches 1, 5 and 6 must be placed in the ON position.

TABLE 2. BANK SELECT SWITCHES

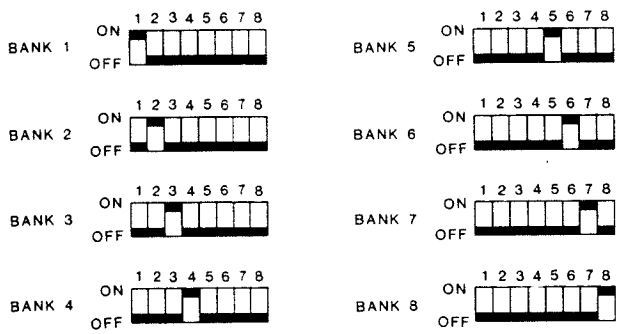

4.0 ADDRESSING

Each Static RAM Module can occupy 4K, 8K, 12K, or 16K bytes of memory (as determined by the Size Select Switches). The starting (lowest) address of the 4K, 8K, 12K, or 16K byte groups may be at any 4K byte boundary of available memory.

The starting address of the Static RAM Module is selected by four Address Switches. TABLE 3 shows the Address Switch settings for each of the possible 4K byte boundaries. If the Static RAM Module will occupy more than one 4K byte group of addresses, the additional 4K byte groups must be reserved. Another module with the same address and bank number may not be addressed within any part of the reserved area. For example; if a Static RAM Module with 16K bytes of static RAM is addressed to start at 8K, the 4K byte groups starting at 8K, 12K, 16K, and 20K must be reserved.

TABLE 3. ADDRESS SWITCH SETTINGS

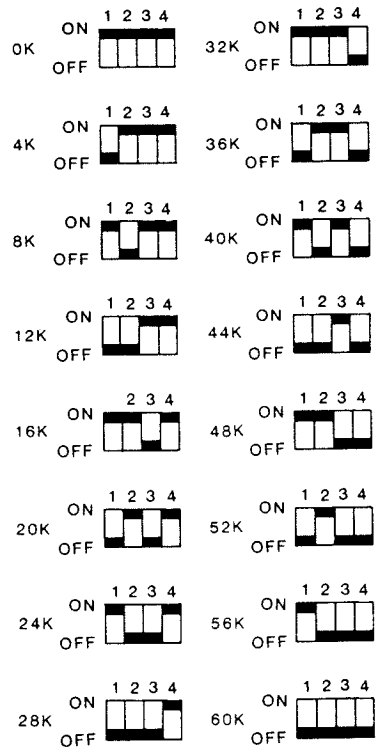

5.0 MEMORY DEVICE INSTALLATION

Static RAM Modules without static RAM devices installed require that the user install the 2K byte static RAM devices. FIGURE 1 shows the eight 28-pin sockets with four 2K byte static RAM devices installed in the first four sockets. 2K

byte static RAM devices must be installed in multiples of two, starting with socket 1.

NOTE

The access time of all static RAM devices installed on the Static RAM Module cannot exceed 250 nanoseconds.

2K byte static RAM devices have 24 pins. The sockets, however, have 28 pins. 2K byte static RAM devices must be installed in the lower 24 pins as depicted in FIGURE 1.

IMPORTANT

Electrostatic discharge (ESD) will damage static RAM devices and other IC devices on the Static RAM Module. Ensure that safeguards are taken to prevent ESD damage when installing static RAM devices.

6.0 INSTALLATION

IMPORTANT

ENSURE THAT POWER TO THE CARD RACK IS OFF BEFORE INSERTING OR REMOVING THIS OR ANY MICRO-COMPUTER MODULE. Failure to do so may result in permanent damage to the module.

The Static RAM Module must be installed in the Master Rack. The rack is physically keyed to prevent modules from being inserted incorrectly. Set the Address Switches per the instructions in Section 4.0.

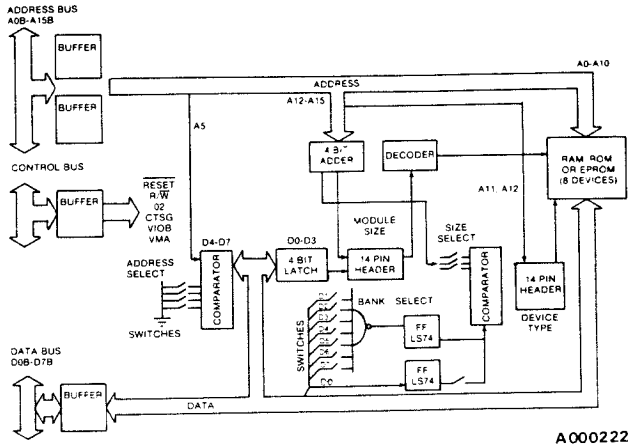

FIGURE 2. BLOCK DIAGRAM

STATIC RAM MODULE

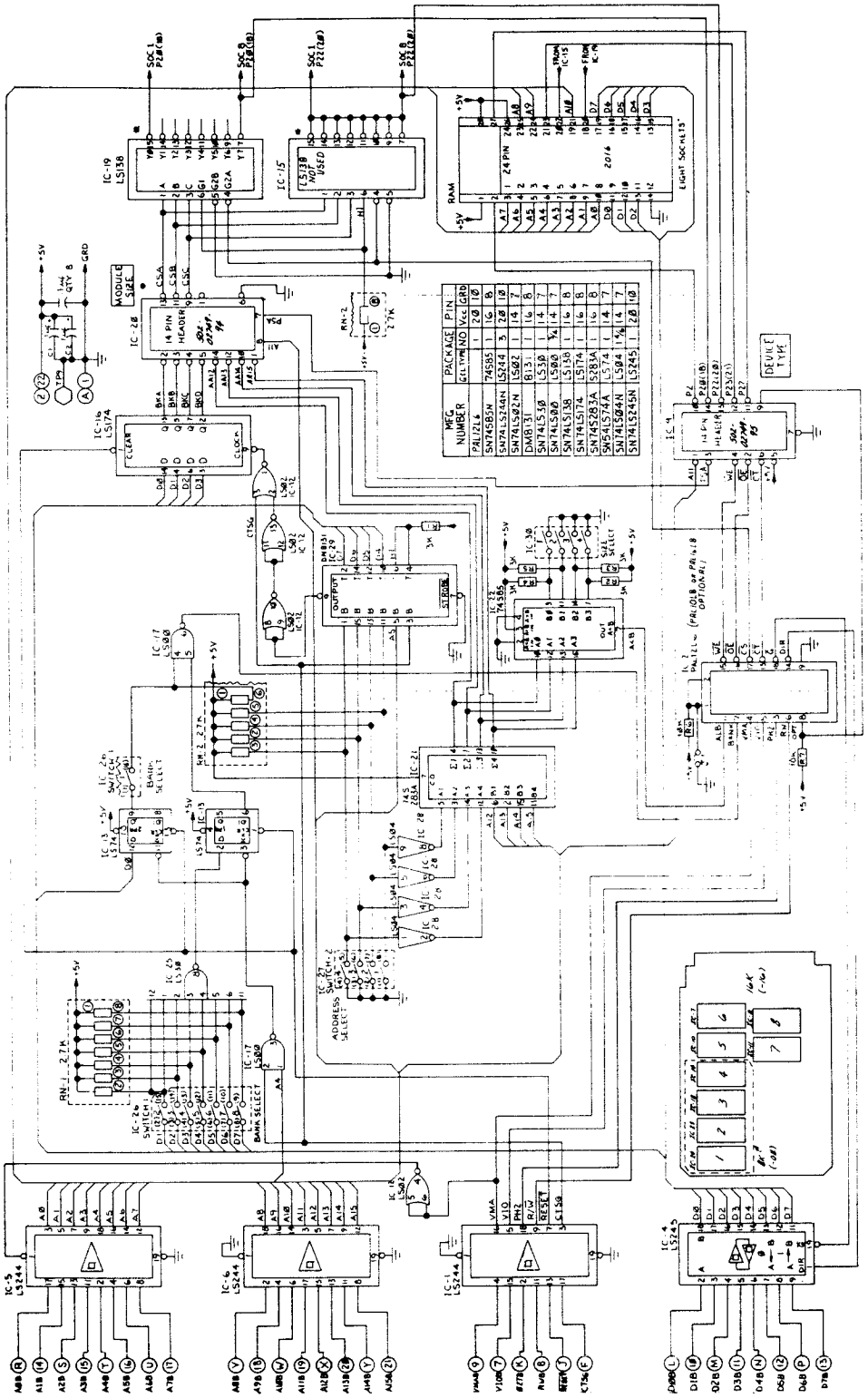

FIGURE 3. SCHEMATIC

36K/40K CMOS RAM MODULE

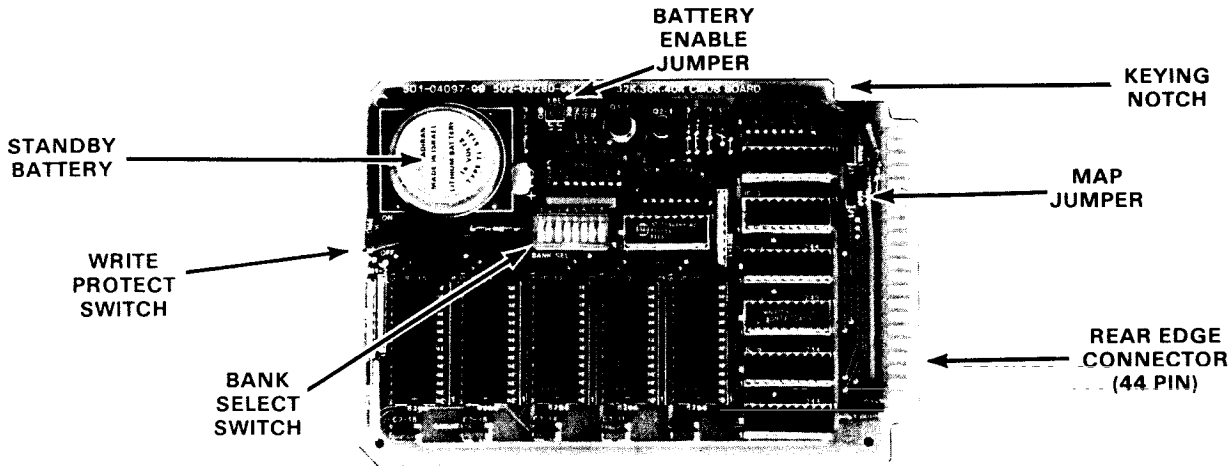

FIGURE 1. 36K/40K CMOS RAM MODULE

1.0 INTRODUCTION

The 36K/40K CMOS RAM module, G&L part number 502-03280-00, provides one full bank of battery backed, read/write user memory for the programmable controller.

An on-board lithium battery ensures the integrity of the stored data during power outages. The module is fully buffered from the microcomputer bus. Additional features include size selection (36K or 40K), bank selection and write protection.

2.0 SIZE SELECTION

The 36K/40K CMOS RAM module can occupy either 36,864 (36K) or 40,960 (40K) memory locations beginning at 8K. The configuration of the MAP jumper determines the amount of memory the module will occupy. The MAP jumper configurations are shown in Table 1.

TABLE 1. MAP JUMPER CONFIGURATIONS

SIZE	MAP JUMPER
36K	OUT
40K	IN

NOTE

36K/40K CMOS RAM modules are shipped with the MAP jumper IN.

The programmable controller can accommodate 40K bytes of user memory starting at 8K. If the EPROM Call Routine module, which occupies 4K bytes of memory, is to be used in the system, set the MAP jumper in the OUT position for 36K. Otherwise, set the MAP jumper in the IN position to take advantage of the full 40K bytes of memory on the module.

The installation of the 36K/40K CMOS RAM module reserves all of the user memory for one full bank. No additional memory modules are required for that bank.

NOTE

If the EPROM Call Routine Module and more than one bank of memory modules are to be used in the system, none of the banks may exceed 36K bytes of memory.

If CALLS board installed cannot use 36K

3.0 BANK SELECT

The bank select feature allows the user to expand system memory by placing up to eight 36K/40K CMOS RAM modules, each configured for unique banks, in the system. Up to eight banks of memory are selectively enabled or disabled through user software.

The bank(s) to which a particular module will respond, depends upon which switches on the bank select dipswitch are closed (ON). Closing the #1 bank select switch places the board in bank one. Closing switches #2,#3 and #4 will place a module in all three corresponding banks. A system reset will automaticaly select bank one. With this in mind, switch #1 should be closed (ON), on the module which is to be active after a reset.

NOTE

If the bank select feature is not used, the #1 switch must be closed (ON) or the module will not respond.

Bank select programming information and procedures are provided with the bank select software (Call Routine E112).

4.0 WRITE PROTECTION

A write protect switch (SW2) is located near the front edge of the 36K/40K CMOS RAM module. Placing the write protect switch in the ON position (handle up) prevents the CPU from changing the memory on the module. Placing the write protect switch in the OFF position (handle down) permits the CPU to change the memory on the module.

5.0 STANDBY BATTERY

An on-board lithium cell ensures the integrity of the stored data during power outages and when the module is removed from the master rack. Due to the extremely low current requirements of this module, battery life expectancy is rated at 10 years.

CAUTION

The on-board lithium battery is a primary cell. No attempt should be made to recharge it, as high internal temperatures and pressures could develop causing the battery to explode.

A jumper is used to connect the on board battery to the module's circuitry. When in place, the IBE jumper supplies power to the CMOS RAM module from the lithium cell for battery backed memory.

However, to conserve power during shipment, the module is supplied with the jumper in a storage position. Before placing the module in the Master Rack, place the jumper over the pins on the Internal Battery Enable (IBE) header. Do not place the jumper over the EBE or IBO headers.

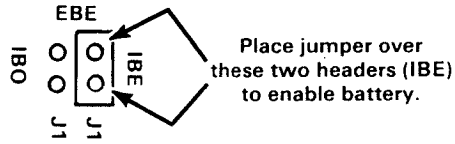

FIGURE 2. BATTERY ENABLE JUMPER

NOTE

To conserve the power of the on-board battery during shipment or long periods of storage, remove the jumper from the IBE header. Keep in mind, however, that any data stored in memory will be lost when the jumper is removed.

6.0 INSTALLATION

36K/40K CMOS RAM modules may only be installed in the Master Rack. Extension Racks are used only for AC and DC Input/Output modules.

After setting the MAP and IBE jumpers and the bank slect switches, insert the 36K/40K CMOS RAM module in the Master Rack. The module is physically keyed to prevent it from being inserted incorrectly.

IMPORTANT

ENSURE THAT POWER TO THE NEST IS REMOVED PRIOR TO INSERTING OR REMOVING ANY MICROCOMPUTER MODULE. Failure to do so may result in permanent damage to the module.

When handling any printed circuit boards, avoid exposure of the boards to electrostatic discharge. Transport printed circuit boards only in antistatic bags designed for that purpose.

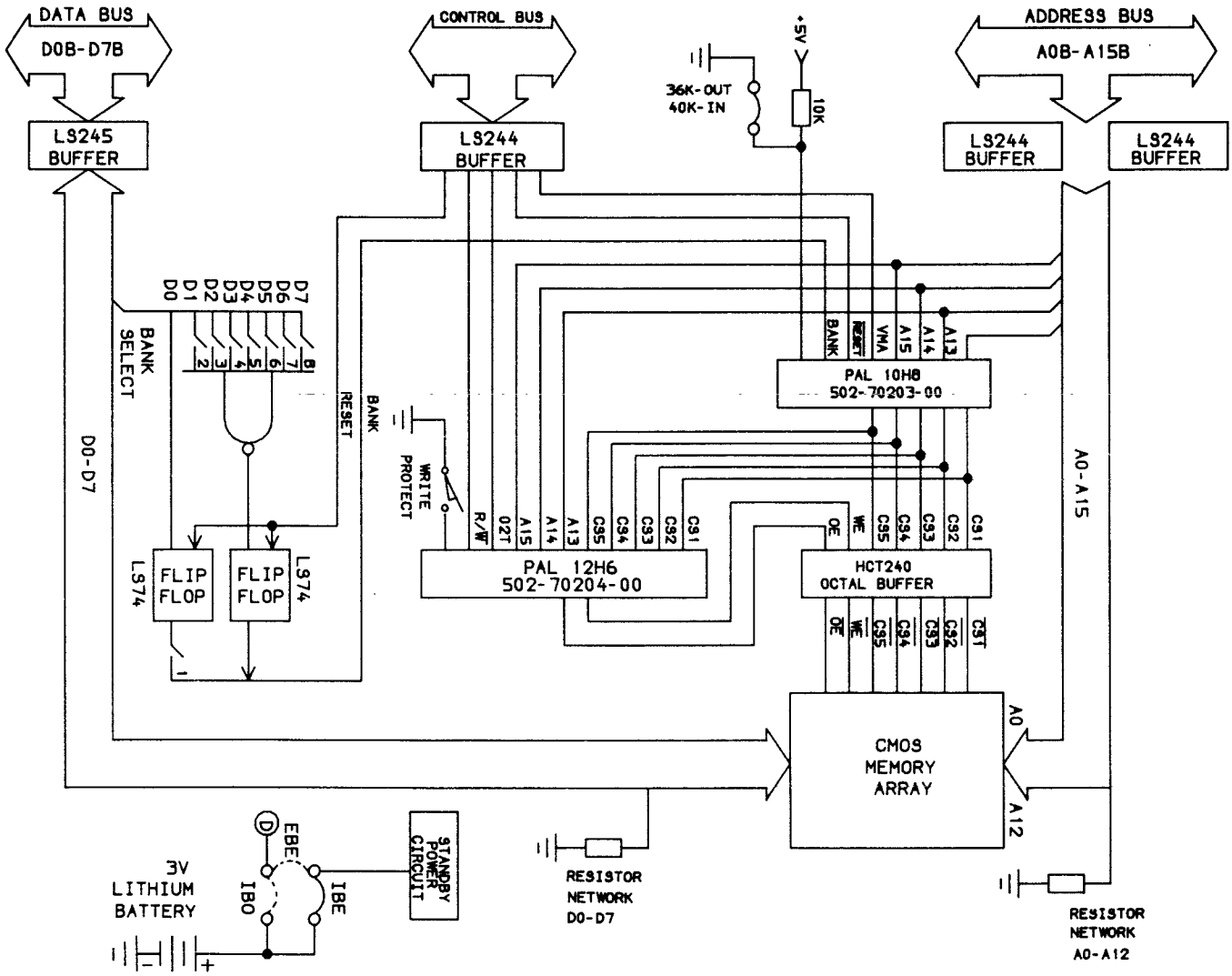

FIGURE 3. BLOCK DIAGRAM

503-63001-29

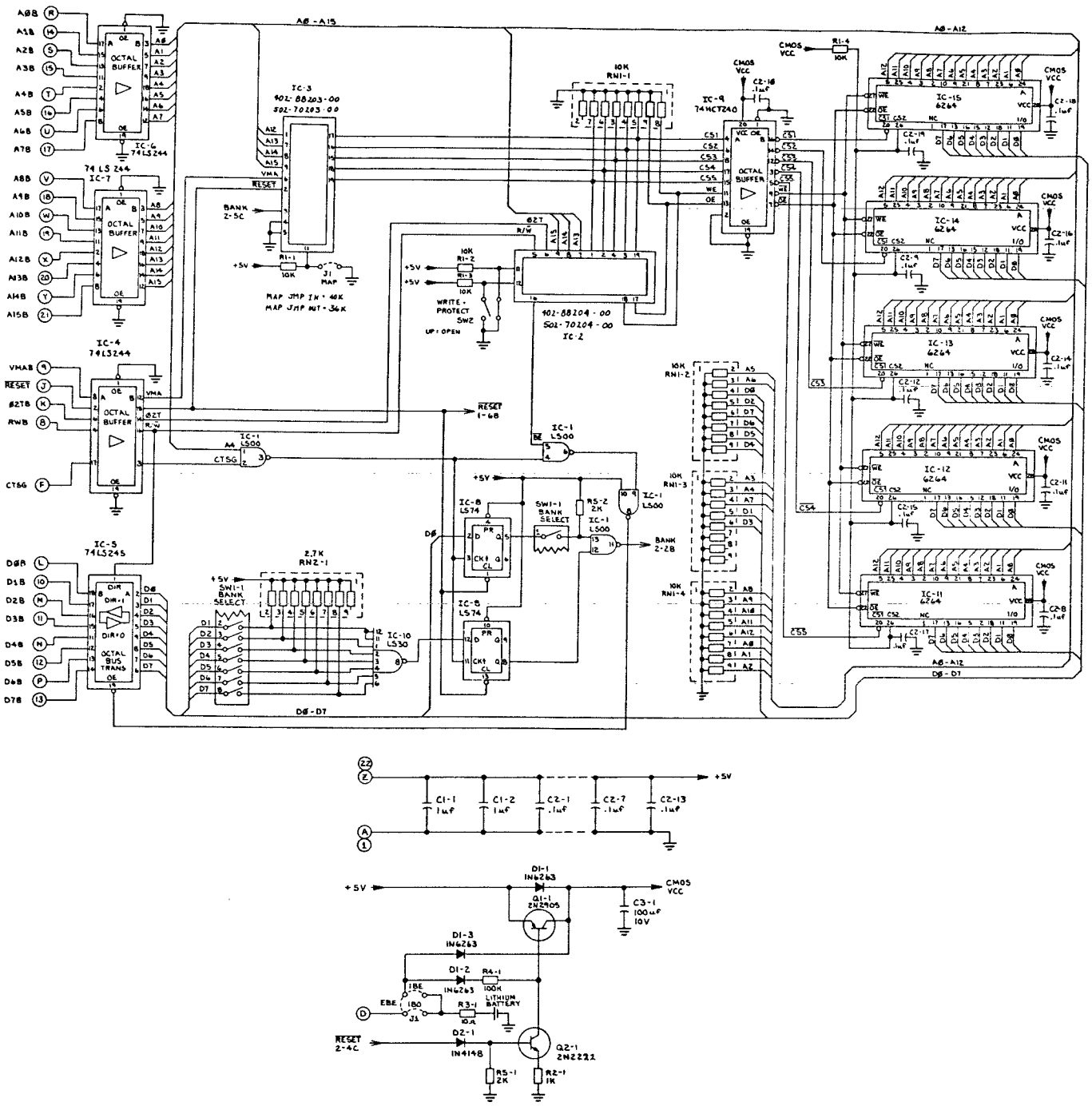

FIGURE 4. SCHEMATIC

8 DC INPUT MODULE

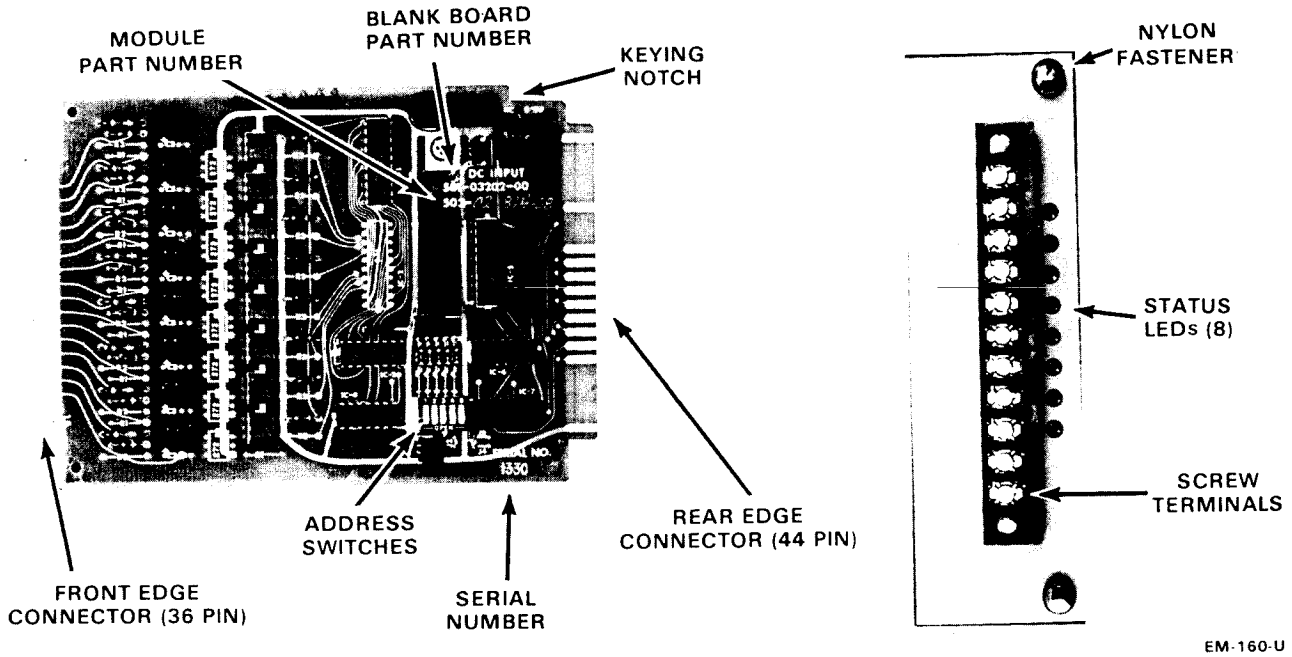

FIGURE 1 DC INPUT MODULE & OPTIONAL FACEPLATE

1.0 INTRODUCTION

Each 8 DC Input Module (part no. 502-02814-08) allows the user to sense the presence or absence of up to eight 24 volt dc signals. DC Input Module 502-02972-08 is used to sense eight 15 volt dc signals. DC Input Module 502-03358-08 is used to sense eight 12 volt dc signals. These input signals are converted to data in a form that can be used by the CPU.

Input circuits are filtered and optically isolated from the microcomputer bus to facilitate reliable operation in electrically noisy environments.

External devices are wired to the module through either a 36-pin card edge connector or a DC Input Faceplate. The latter option permits simplified wiring connections to be made to compression screw terminals and also features eight input status LEDs.

The DC Input Module input circuit is shown in Figure 2. This circuit is typical of the eight inputs.

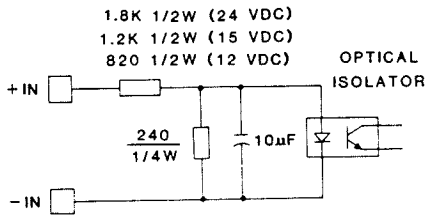

FIGURE 2. INPUT CIRCUIT (1 of 8)

2.0 INSTALLATION

IMPORTANT

ENSURE THAT POWER TO THE CARD RACK IS OFF BEFORE INSERTING OR REMOVING THIS OR ANY MICRO-COMPUTER MODULE. Failure to do so may result in permanent damage to the module.

DC Input Modules may be installed in the Master Rack or Expansion Racks. The racks are physically keyed to prevent modules from being inserted incorrectly.

Set the Address Select Switches per the instructions in Section 3.0. Make wiring connections to and fasten the card edge connector or faceplate before applying power.

3.0 ADDRESSING

Each 8 DC Input Module occupies eight memory locations. The five board-mounted address switches must be set for the lowest of the eight addresses desired. When the state of address lines A3 through A7 matches the switch settings, the module is selected. A CLOSED switch (handle in the ON position) requires the corresponding address line to be LOW for module selection. An OPEN switch (OFF position) requires the address line to be HIGH.

Table 1 contains the switch settings for the 32 possible beginning address points.

TABLE 1. ADDRESS SWITCH SETTINGS

PC ADDRESS	SWITCHES 12345	PC ADDRESS	SWITCHES 12345
x000	ON OFF	x128	ON OFF
x008	ON OFF	x136	ON OFF
x016	ON OFF	x144	ON OFF
x024	ON OFF	x152	ON OFF
x032	ON OFF	x160	ON OFF
x040	ON OFF	x168	ON OFF
x048	ON OFF	x176	ON OFF
x056	ON OFF	x184	ON OFF
x064	ON OFF	x192	ON OFF
x072	ON OFF	x200	ON OFF
x080	ON OFF	x208	ON OFF
x088	ON OFF	x216	ON OFF
x096	ON OFF	x224	ON OFF
x104	ON OFF	x232	ON OFF
x112	ON OFF	x240	ON OFF
x120	ON OFF	x248	ON OFF

Numbers in the PC ADDRESS column may be used for contact number suffixes. The leading "x" becomes a decimal number that is based on the rack in which the board is installed. As seen in Table 2, "x" can be 2 through 9.

TABLE 2. RACK I/O ADDRESSES

RACK NAME	PC ADDRESSES	MAX. I/O PER RACK
MASTER RACK	2000 - 2239	240
1st EXTENSION	3000 - 3255	256
2nd EXTENSION	4000 - 4255	256
3rd EXTENSION	5000 - 5255	256
4th EXTENSION	6000 - 6255	256
5th EXTENSION	7000 - 7255	256
6th EXTENSION	8000 - 8255	256
7th EXTENSION	9000 - 9255	256

Rack address assignments are made in 256 address increments. A jumper on the Nest Receiver Board permits one rack to respond to all 256 addresses, or two racks to split the assignments into upper and lower 128-address increments.

4.0 CARD EDGE CONNECTOR

A 36-pin card edge connector may be used to connect the 8 DC Input Module to external devices. Phosphor-bronze crimp contacts, with gold-over-nickel plating, are available. Dummy contacts may be inserted into the connector at unused places for improved holding power. A complete eight foot DC Input Harness is available.

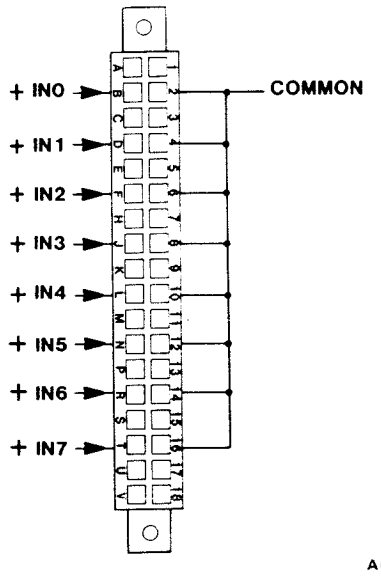

FIGURE 3. CARD EDGE CONNECTOR WIRING

8 DC INPUT MODULE

The recommended external wiring convention is as follows: +Inputs should use No. 20 blue wire; common and jumpers should use No. 20 white/green wire.

NOTE

The eight jumper pins labeled COMMON are the return paths from the +IN inputs. These pins are not connected to the system logic ground.

5.0 FACEPLATE CONNECTOR

The faceplate connector allows wiring connections to be made to compression screw terminals. LED indicators are supplied to assist in troubleshooting by glowing when an input signal is present.

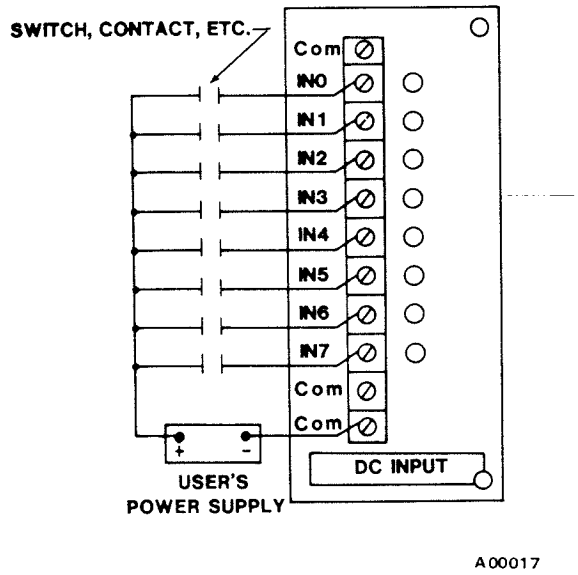

FIGURE 4. FACEPLATE WIRING

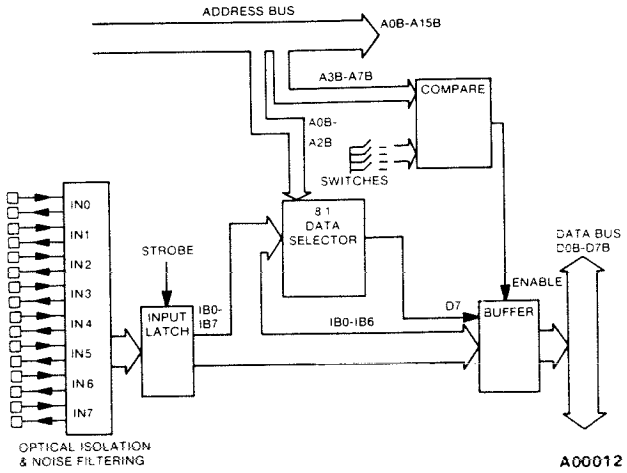

FIGURE 5. BLOCK DIAGRAM

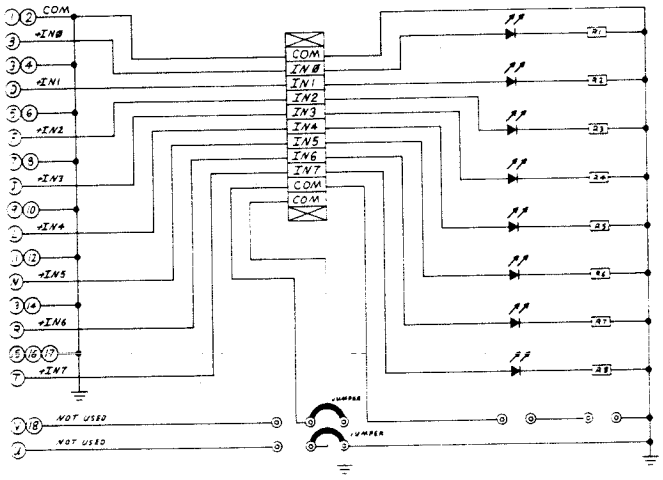

FIGURE 6. FACEPLATE SCHEMATIC

8 DC INPUT MODULE

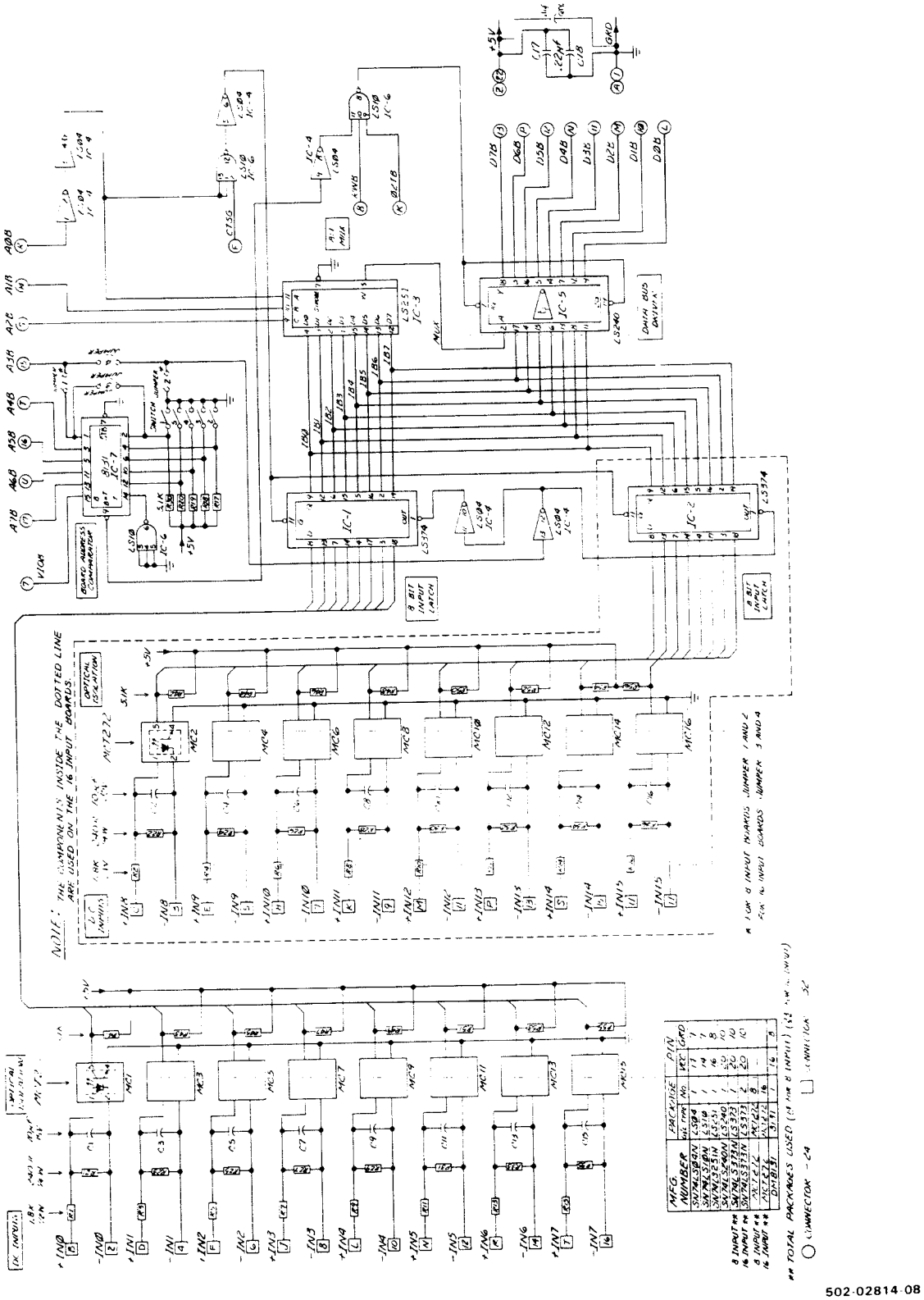

FIGURE 7. 8 DC INPUT MODULE SCHEMATIC

16 DC INPUT MODULE

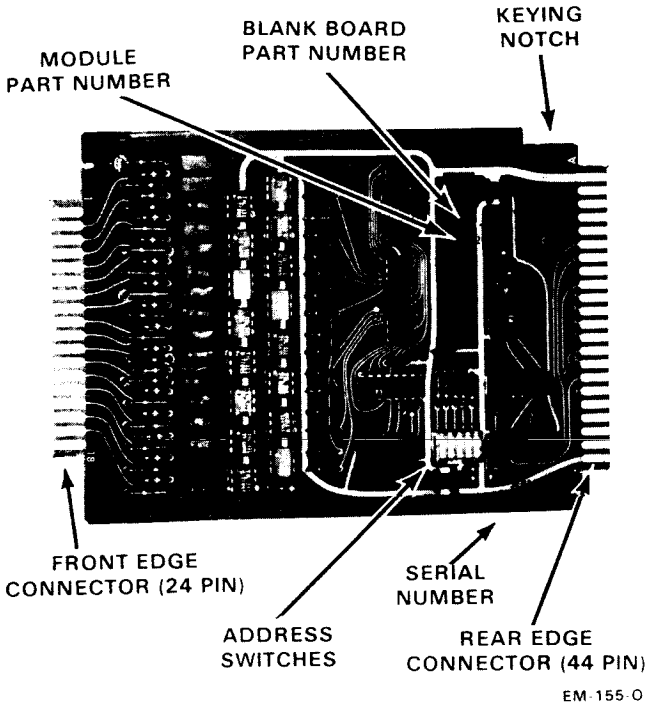

FIGURE 1. 16 DC INPUT MODULE

1.0 INTRODUCTION

Each 16-input DC Input Module, part 502-02814-16, allows the user to sense the presence or absence of up to sixteen 24 volt dc signals. DC Input Module 502-02972-16 is used to sense sixteen 15 volt dc signals. DC Input Module 502-03358-16 is used to sense sixteen 12 volt dc signals. These input signals are converted to data in a form that can be used by the CPU.

Input circuits are filtered and optically isolated from the microcomputer bus for reliable operation in electrically noisy environments.

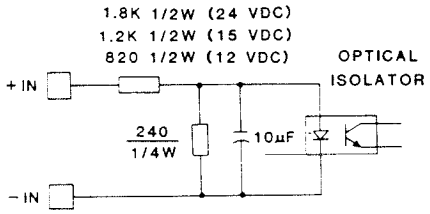

FIGURE 2. INPUT CIRCUIT (1 of 16)

External devices are connected to the module through a 36-pin card edge connector.

The DC Input Module input circuit is shown in Figure 2. This circuit is typical of the sixteen inputs.

2.0 INSTALLATION

IMPORTANT

ENSURE THAT POWER TO THE CARD RACK IS OFF BEFORE INSERTING OR REMOVING THIS OR ANY MICRO-COMPUTER MODULE. Failure to do so may result in permanent damage to the module.

DC Input Modules may be installed in the Master Rack or Expansion Racks. The racks are physically keyed to prevent modules from being inserted incorrectly. Set the Address Switches per the instructions in Section 3.0. Make wire connections to and fasten the card edge connector before applying power.

3.0 ADDRESSING

Each 16 DC Input Module occupies sixteen memory locations. The board-mounted Address Switches must be set for the lowest of the sixteen addresses desired. Switch 1 may be disregarded. When the state of address lines A4 through A7 matches the Address Switch settings, the

TABLE 1. ADDRESS SWITCH SETTINGS

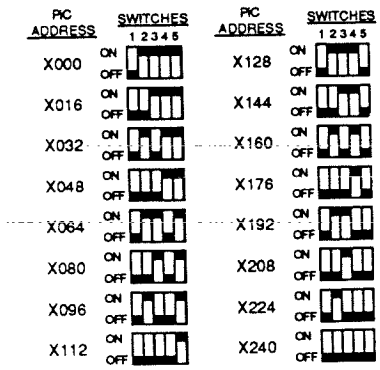

module is selected. A CLOSED Address Switch (handle in the ON position) requires the corresponding address line to be LOW for module selection. An OPEN Address Switch (OFF position) requires the address line to be HIGH.

TABLE 1 contains the Address Switch settings for the 16 possible beginning address points.

The PC ADDRESS column may be used for contact number suffixes. The leading "x" becomes a decimal number that is based on the rack in which the board is installed. As seen in TABLE 2, "x" can be 2 through 9.

TABLE 2. RACK I/O ADDRESSES

RACK NAME	PC ADDRESSES	MAX. I/O PER RACK
MASTER RACK	2000 - 2239	240
1st EXTENSION	3000 - 3255	256
2nd EXTENSION	4000 - 4255	256
3rd EXTENSION	5000 - 5255	256
4th EXTENSION	6000 - 6255	256
5th EXTENSION	7000 - 7255	256
6th EXTENSION	8000 - 8255	256
7th EXTENSION	9000 - 9255	256

Rack address assignments are made in 256-address increments. A jumper on the Nest Receiver Board permits either one rack to respond to all 256 addresses, or two racks to split the assignments into upper and lower 128-address increments.

4.0 HARDWARE INTERFACING

A 36-pin card edge connector may be used to connect the 16 DC Input Module to external devices. Phosphor-bronze crimp contacts, with gold-over-nickel plating, are available. Dummy contacts may be inserted into the connector at unused places for improved holding power. A complete eight foot 16 DC Input Harness is available.

The recommended external wiring convention is as follows: +Inputs should be No. 20 blue wire; common jumpers should be No. 20 white/green wire.

NOTE

The sixteen pins labeled COMMON are the return paths from the +IN inputs. These pins are not connected to the system logic ground.

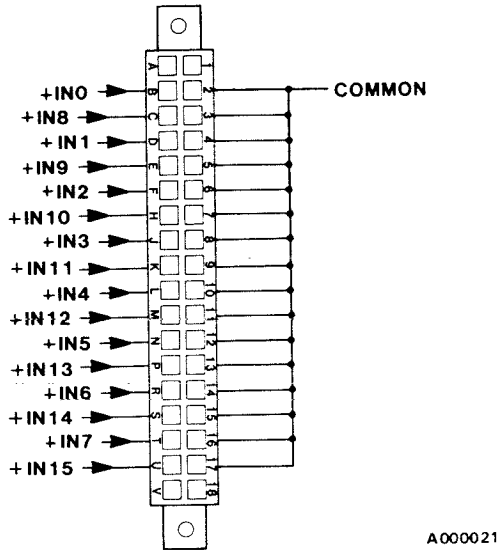

FIGURE 3. CARD EDGE CONNECTOR WIRING

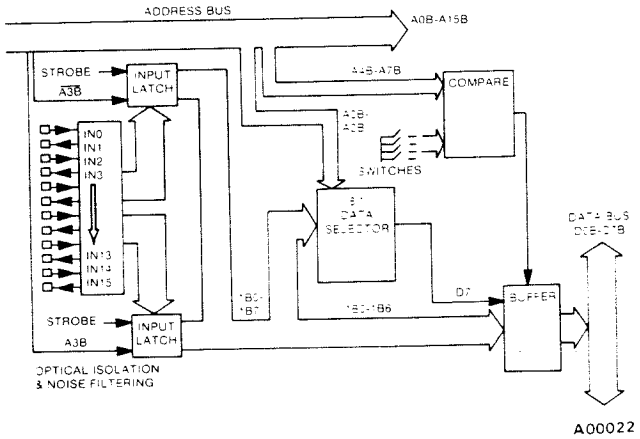

FIGURE 4. BLOCK DIAGRAM

16 DC INPUT MODULE

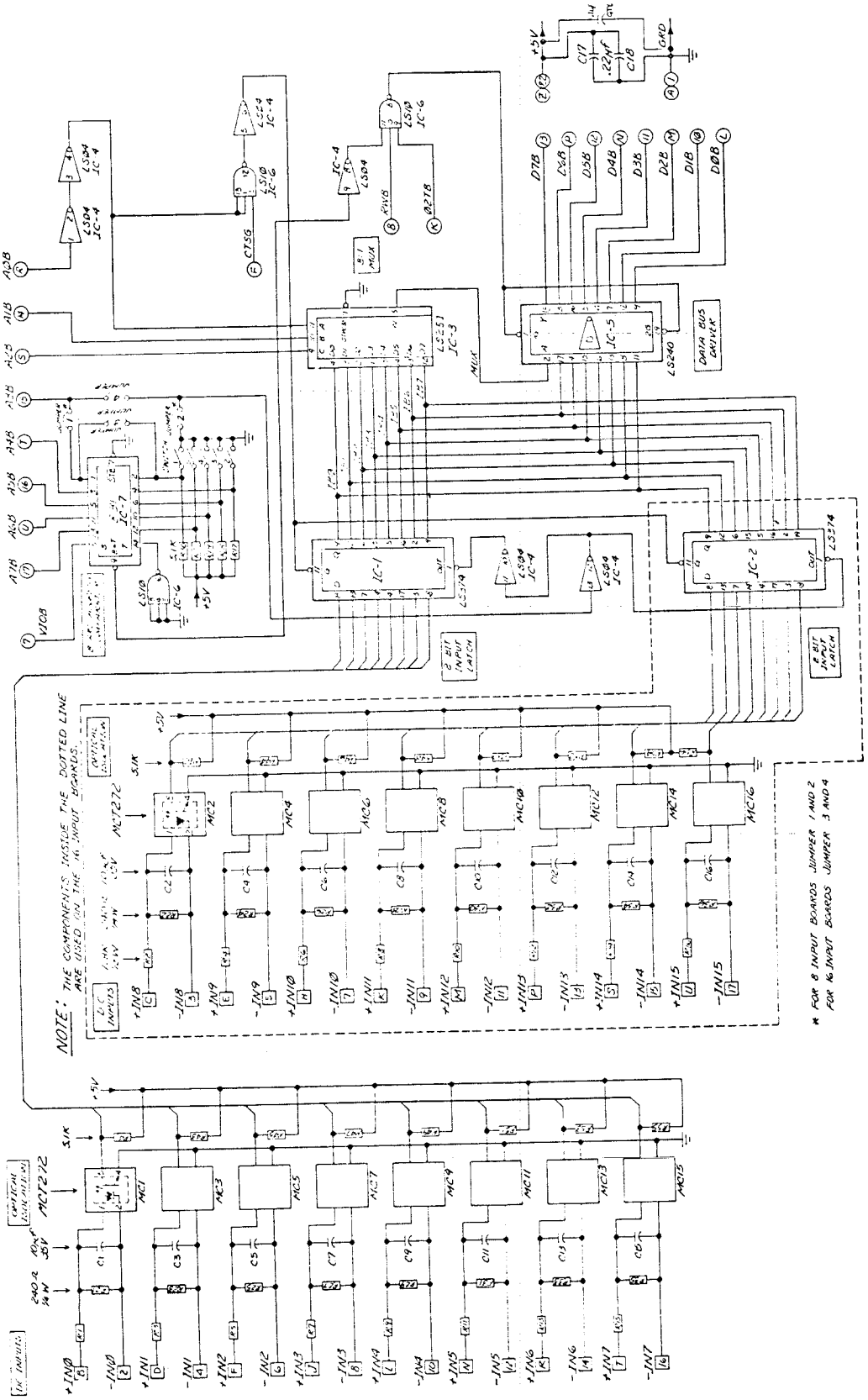

502-02814-16

FIGURE 5. 16 DC INPUT MODULE SCHEMATIC

DC OUTPUT MODULE

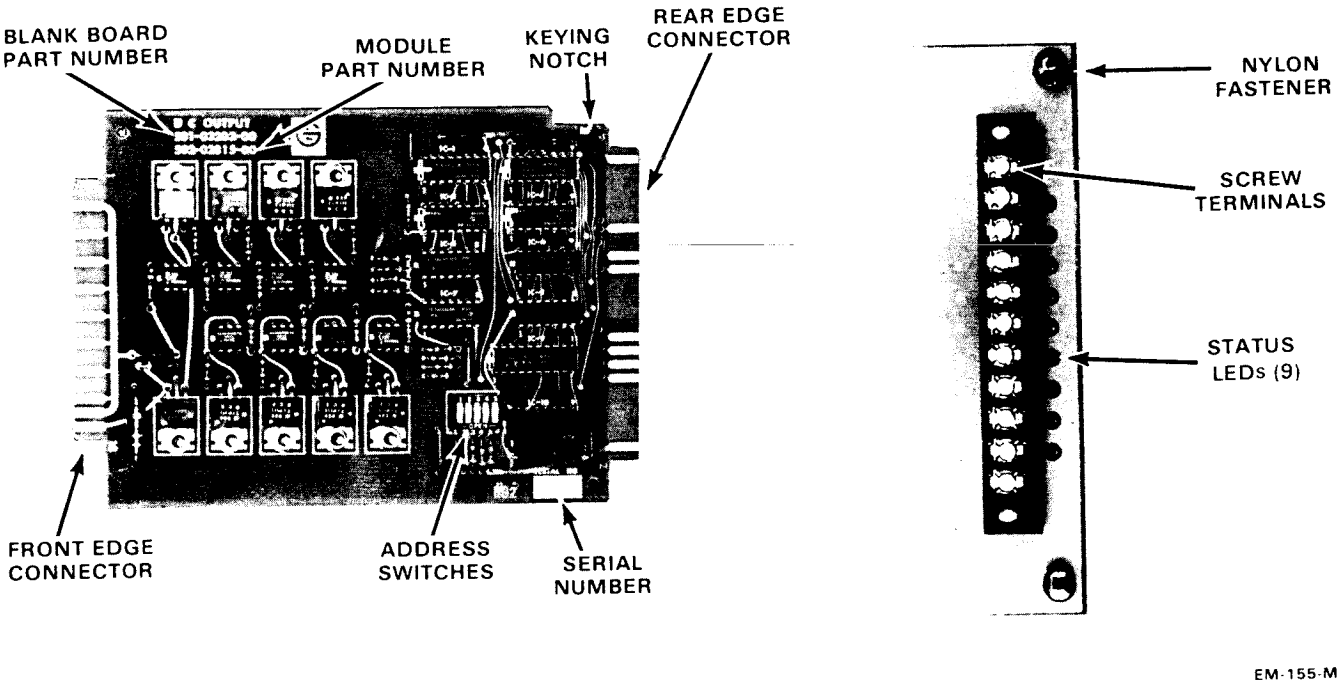

FIGURE 1 DC OUTPUT MODULE & OPTIONAL FACEPLATE

1.0 INTRODUCTION

Each DC Output Module (part no. 502-02815-00) allows the user to control up to eight 8 to 30 volt dc circuits. Total current output from a DC Output Module is limited to 1 ampere. A user-furnished dc power supply must be connected to the module to provide a source voltage. This voltage is distributed to the loads by transistors which act as solid-state switches. Electronic current limiting prevents damage to the module due to excessive loads. The microcomputer bus is optically isolated from the transistor switches. External devices are connected to the module with either a 36 pin card edge connector or a DC Output Faceplate Connector. The latter option permits simplified wiring to compression screw terminals and features nine status LEDs.

2.0 INSTALLATION

DC Output modules may be installed in the Master Rack or Expansion Racks. The racks are physically keyed to prevent modules from being inserted incorrectly. Set the Address Select Switches per the instructions in Section 2.1. Make wiring connections to and fasten the card edge connector or faceplate before applying power.

IMPORTANT

ENSURE THAT POWER TO THE CARD RACK IS OFF BEFORE INSERTING OR REMOVING THIS OR ANY MICRO-COMPUTER MODULE. Failure to comply may result in permanent damage to the module.

2.1 ADDRESSING

Each DC Output Module occupies eight memory locations. The five board-mounted address switches must be set for the lowest of the eight addresses desired. When the states of address lines A3 through A7 match the switch settings, the module is selected. A CLOSED switch (handle in the ON

position) requires the corresponding address line to be LOW for selection. An OPEN switch (OFF position) requires the address line to be HIGH.

Table 1 contains the switch settings for the 32 possible beginning address points.

TABLE 1. ADDRESS SWITCH SETTINGS

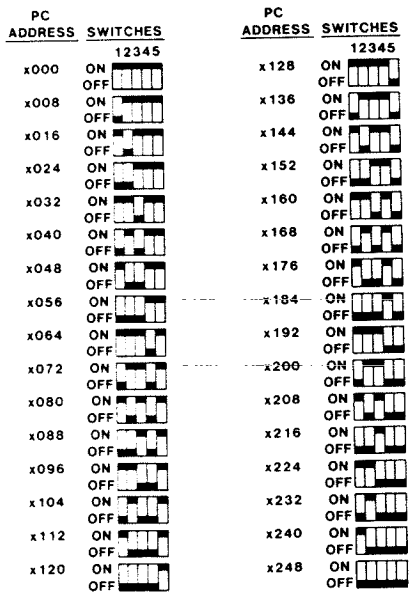

Numbers in the PC ADDRESS column may be used for coil number suffixes. The leading "x" represents a decimal number based on the rack in which the module is plugged. As indicated in Table 2, "x" can be 2 through 9.

TABLE 2. RACK I/O ADDRESSES

RACK NAME	PC ADDRESSES	MAX. I/O PER RACK
MASTER RACK	2000 - 2239	240
1st EXTENSION	3000 - 3255	256
2nd EXTENSION	4000 - 4255	256
3rd EXTENSION	5000 - 5255	256
4th EXTENSION	6000 - 6255	256
5th EXTENSION	7000 - 7255	256
6th EXTENSION	8000 - 8255	256
7th EXTENSION	9000 - 9255	256

Rack address assignments are made in 256 address increments. A jumper on the Nest Receiver Board permits one rack to respond to all 256 addresses, or two racks to split the assignment into upper and lower 128-address increments.

2.2 CARD EDGE CONNECTOR

A 36-pin card edge connector may be used to connect the DC Output Module to external devices. Phosphor bronze-crimp contacts with gold-over-nickel plating are available. Dummy contacts may be inserted into the connector at unused places for better holding capability. A complete eight foot DC Output Harness is available.

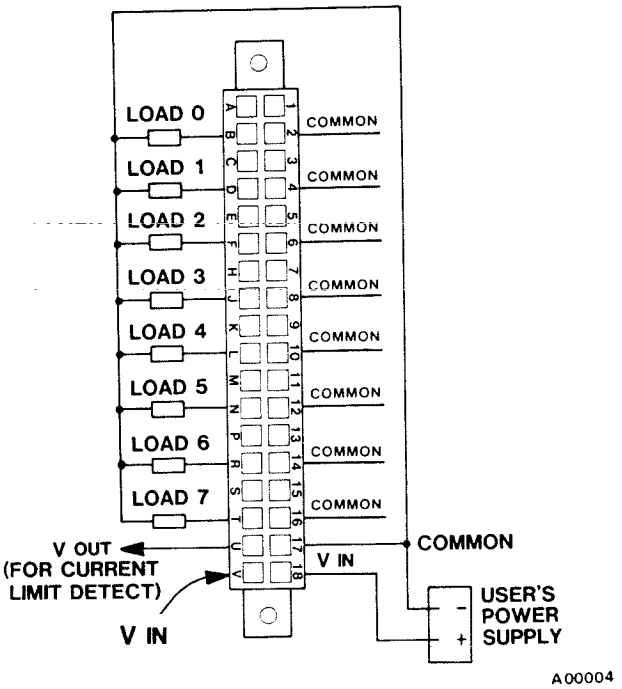

FIGURE 2. CARD EDGE CONNECTOR WIRING

The recommended external wiring convention is as follows: V-IN, V-OUT, and LOADS should be No. 20 blue wire; common, No. 20 white/green wire.

NOTE

The nine pins that are marked COMMON form a return path from the loads to the user's power supply. These pins are not connected to the system logic ground.

2.3 FACEPLATE CONNECTOR

The Faceplate Connector allows wiring connections to be conveniently made to compression screw terminals. LED indicators are provided to assist in troubleshooting. The upper eight LEDs indicate output status by glowing when the respective outputs are energized. The lower LED glows when power is present from the user's power supply.

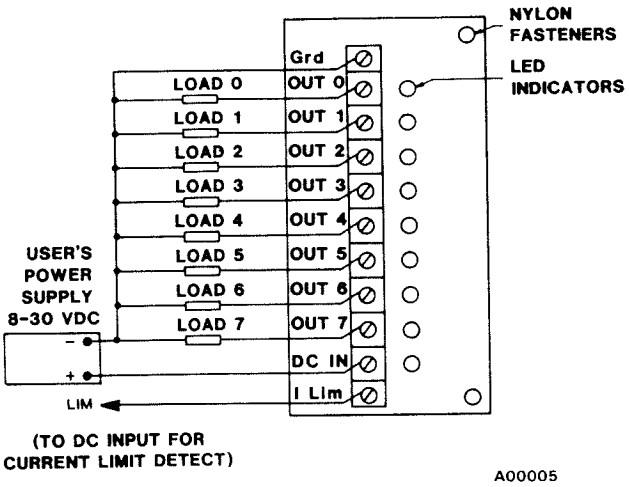

FIGURE 3. FACEPLATE WIRING

3.0 CURRENT LIMIT

The current limit circuit prevents damage to the module from occurring in the event of a high-current condition (e.g. shorted output). Total current output for a DC Output Module is limited to 1.0 ampere for any combination of outputs. If desired, an optional circuit may be connected to each DC Output Module to signal an over-current condition. By connecting these circuits to dc inputs, the system can detect and display any boards in current limit.

The signal presented to the DC Input Module will be at a high level when the DC Output Module is functioning correctly. When this signal falls to a low level, the DC Output Module is in current limit. Each DC Output Module has one V-OUT pin so that an 8 DC Input Module can monitor eight DC Output Modules. The current limit circuit will return the board to normal operation when the overload is removed.

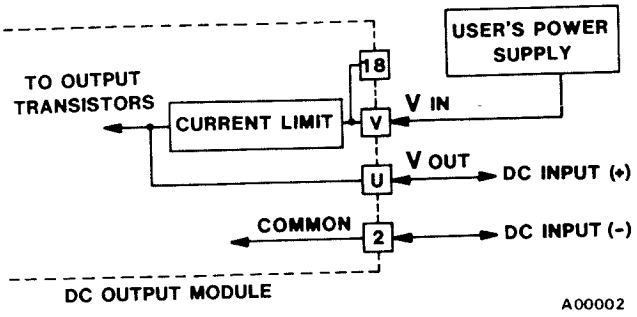

FIGURE 4. CURRENT LIMIT CIRCUIT

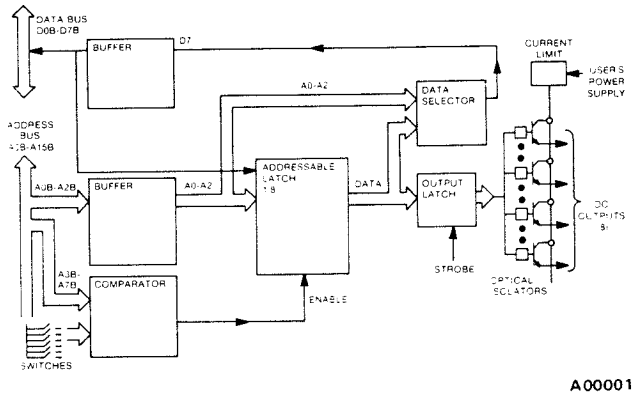

FIGURE 5. BLOCK DIAGRAM

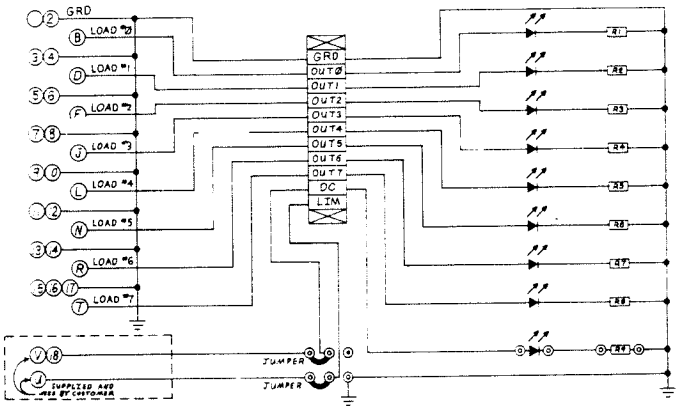

FIGURE 6. FACEPLATE SCHEMATIC

DC OUTPUT MODULE

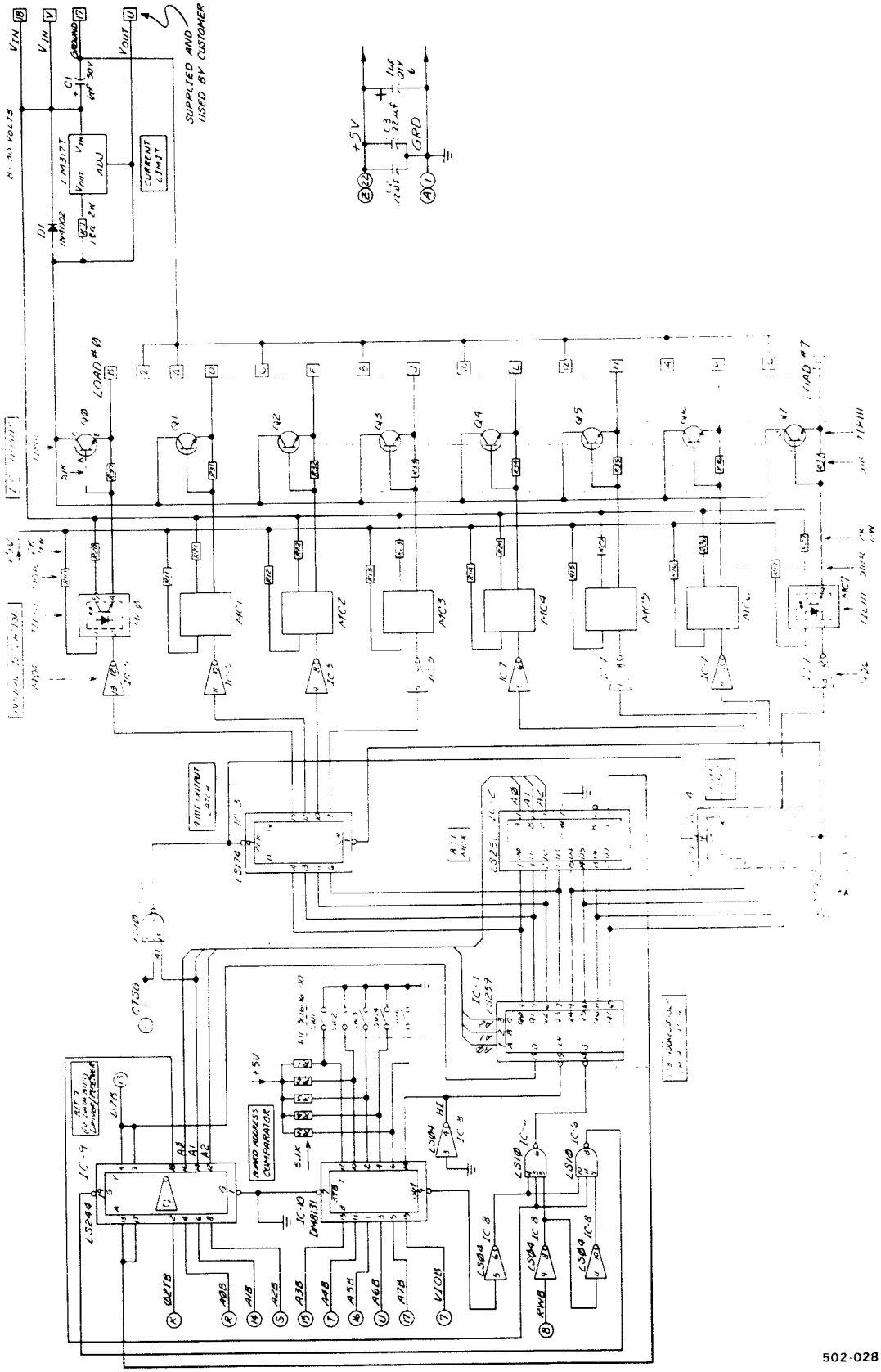

FIGURE 7 DC OUTPUT MODULE SCHEMATIC

3 AMP DC OUTPUT MODULE

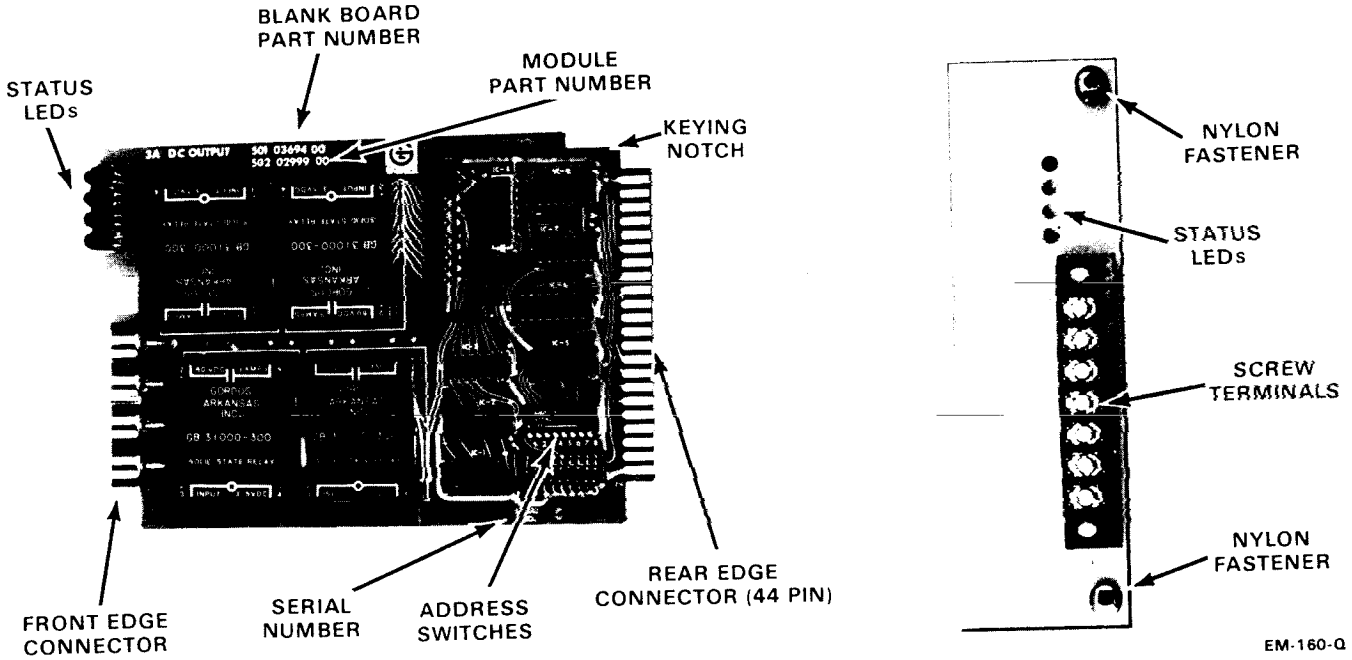

FIGURE 1. 3 AMP DC OUTPUT MODULE & OPTIONAL FACEPLATE

1.0 INTRODUCTION

Each 3 Amp DC Output Module (part 502-02999-00) allows the user to control up to four dc circuits. Loads of up to 3 amperes and 50 volts are permitted. A user-furnished dc power supply must be connected to the module to provide a source voltage. This voltage is distributed to the loads by solid state relays. Four on-board fuses protect the relays from overload. The microcomputer bus is optically isolated from the relays. External devices are connected to the module with either a 24-pin card edge connector or a 3 Amp DC Output Faceplate (shown in Figure 1). The latter option permits simplified wiring to compression screw terminals. Four board-mounted status LEDs are visible through windows in the faceplate.

2.0 INSTALLATION

DC Output modules may be installed in the Master Rack or Expansion Racks. The racks are physically keyed to prevent modules from being inserted incorrectly. Set the Address Switches per the instructions in Section 3.0. Make wiring connections to and fasten the card edge connector or faceplate before applying power.

IMPORTANT

ENSURE THAT POWER TO THE CARD RACK IS OFF BEFORE INSERTING OR REMOVING THIS OR ANY MICRO-COMPUTER MODULE. Failure to do so may result in permanent damage to the module.

2.1 CARD EDGE CONNECTOR

A 24-pin card edge connector may be used to connect the 3 Amp DC Output Module to external devices. Phosphor-bronze crimp contacts with gold-over-nickel plating are available. Dummy contacts may be inserted into the connector at unused places for better holding power.

Recommended external wiring is as follows: V IN and positive sides of the load should be wired with No. 16 blue

wire. Common should be No. 16 white/green wire.

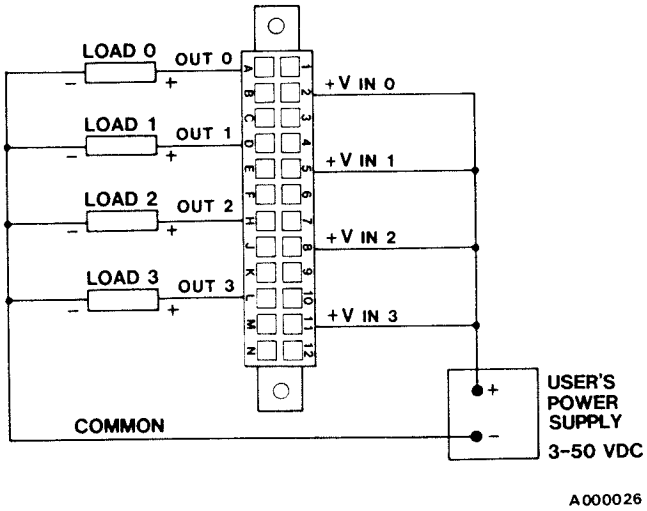

FIGURE 2. CARD EDGE CONNECTOR WIRING

2.2 FACEPLATE CONNECTOR

The Faceplate Connector allows wiring connections to be conveniently made to compression screw terminals. Four LED indicators assist in troubleshooting by glowing when the respective outputs are energized.

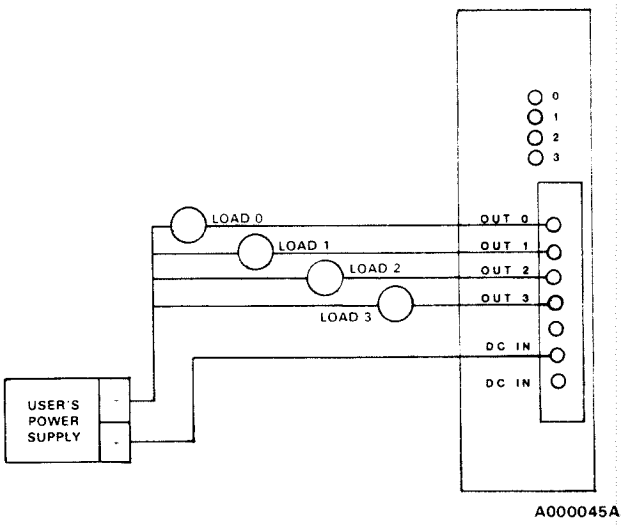

FIGURE 3 FACEPLATE WIRING

3.0 ADDRESSING

Each 3 Amp DC Output Module occupies four memory locations. The six board-mounted Address Switches must be set for the lowest of the four addresses desired. When the states of address lines A2 through A7 match the Address Switch settings, the module is selected. A CLOSED Address Switch (handle in the ON position) requires the corresponding address line to be LOW for selection. An OPEN Address Switch (OFF position) requires the address line to be HIGH.

TABLE 1 contains Address Switch settings for the 64 possible beginning address points.

TABLE 1. ADDRESS SWITCH SETTINGS

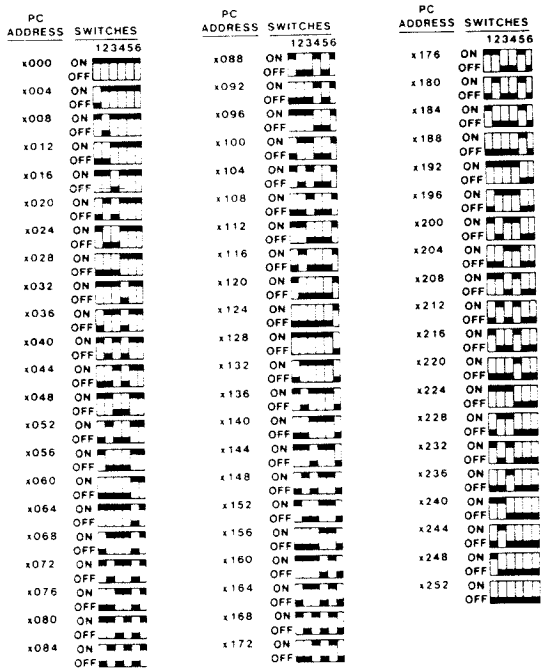

TABLE 2. RACK I/O ADDRESSES

RACK NAME	PC ADDRESSES	MAX. I/O PER RACK
MASTER RACK	2000 - 2239	240
1st EXTENSION	3000 - 3255	256
2nd EXTENSION	4000 - 4255	256
3rd EXTENSION	5000 - 5255	256
4th EXTENSION	6000 - 6255	256
5th EXTENSION	7000 - 7255	256
6th EXTENSION	8000 - 8255	256
7th EXTENSION	9000 - 9255	256

3 AMP DC OUTPUT MODULE

The PC ADDRESS column may be utilized for coil number suffixes. The leading "x" becomes a decimal number based on the rack in which the board is plugged. As seen in TABLE 2, "x" can be 2 through 9.

Rack address assignments are made in 256-address increments. A jumper on the Nest Receiver Board permits one rack to respond to all 256 addresses, or two racks to split the assignment into upper and lower 128 address increments.

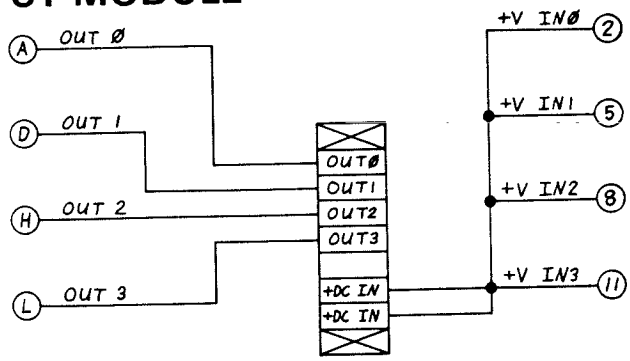

FIGURE 5. FACEPLATE SCHEMATIC

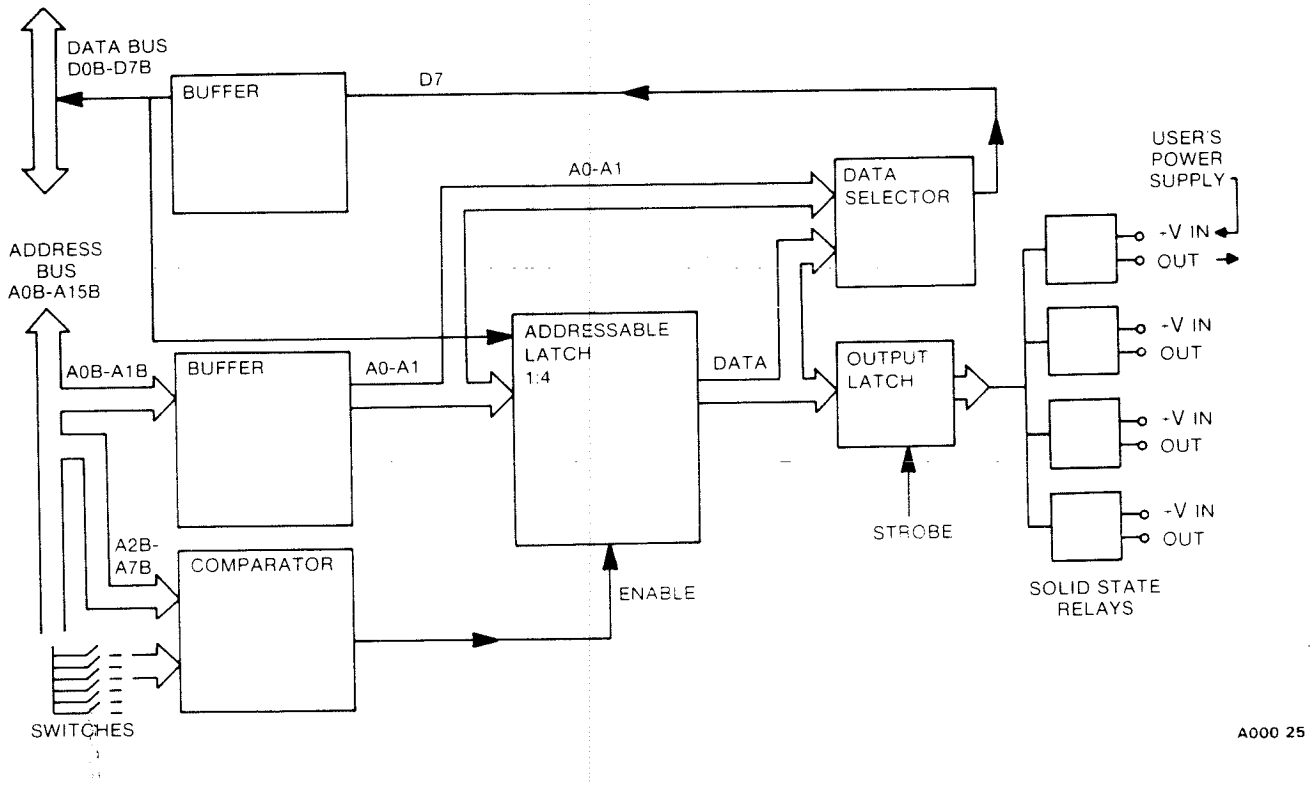

FIGURE 4. BLOCK DIAGRAM

3 AMP DC OUTPUT MODULE

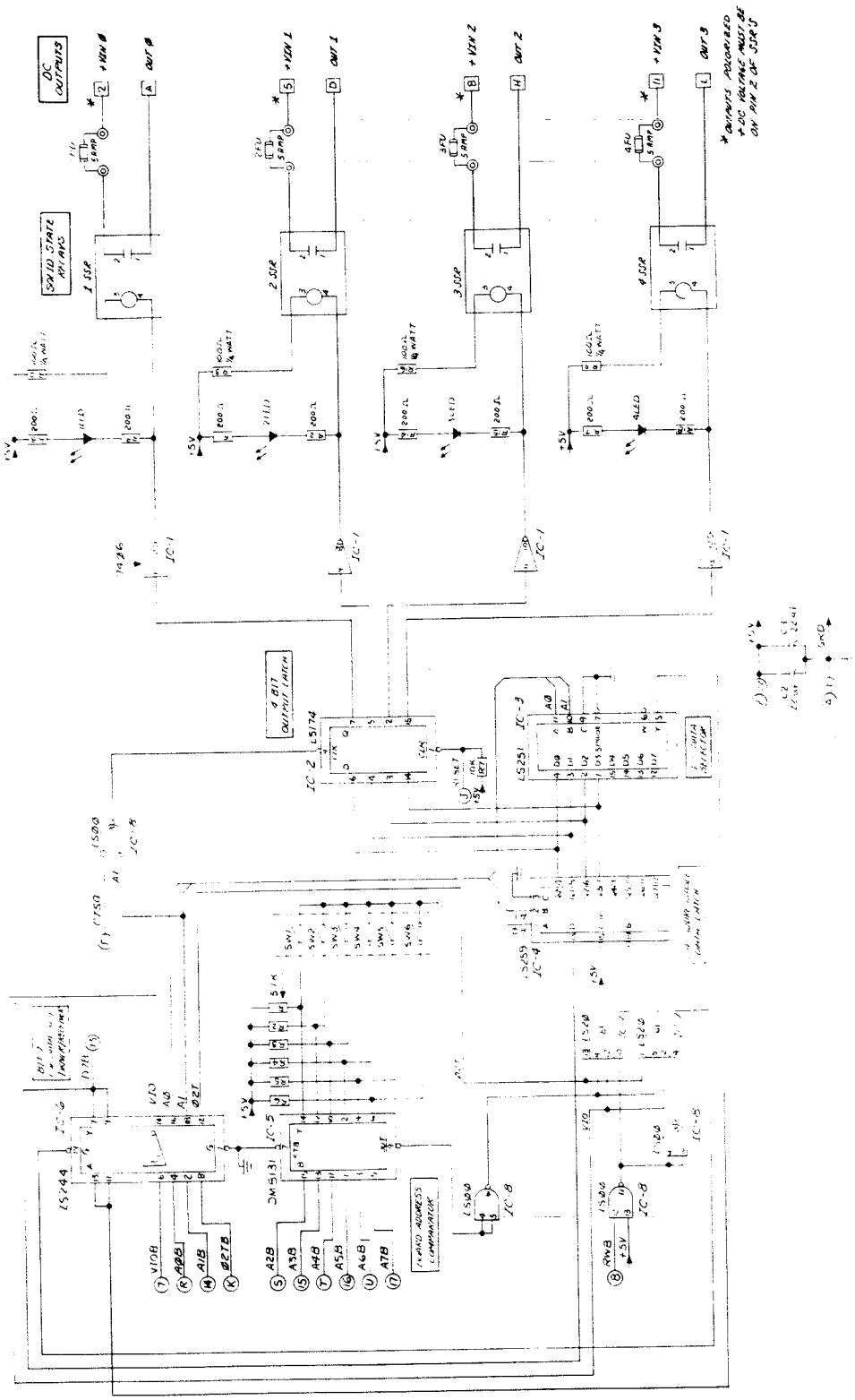

FIGURE 6. 3 AMP DC OUTPUT MODULE SCHEMATIC

DC OUTPUT INTERFACE MODULE

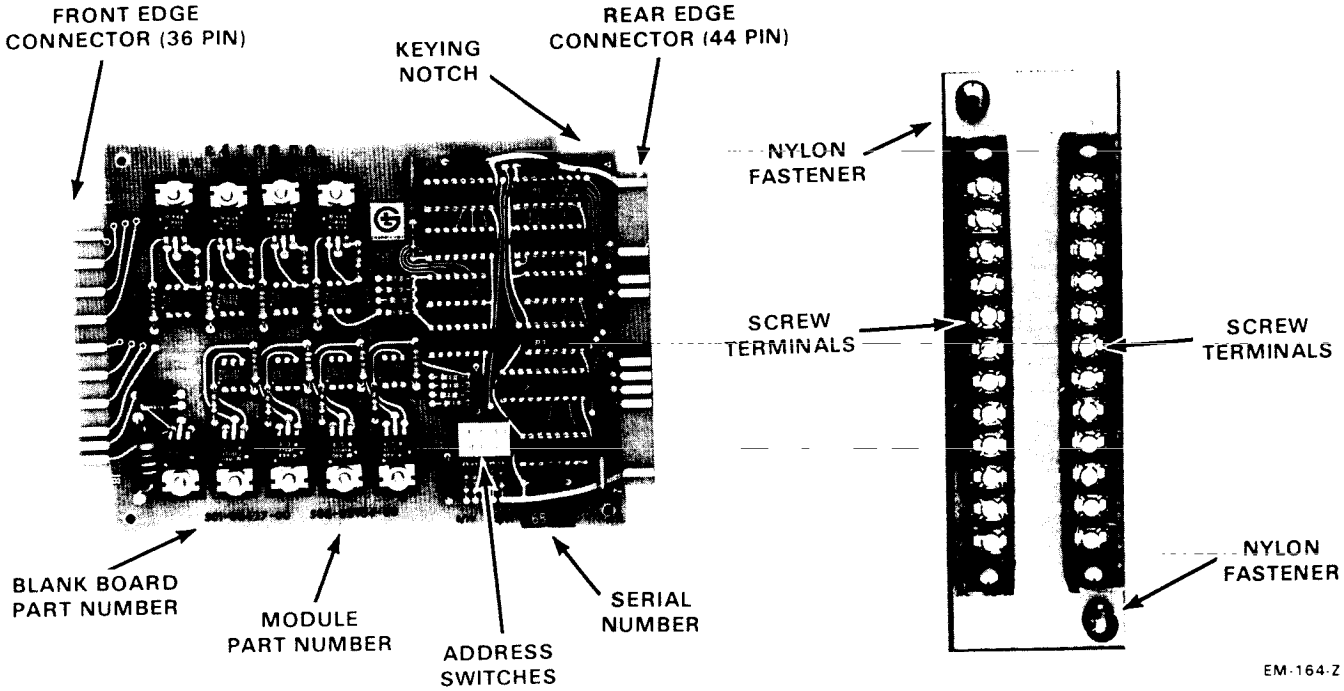

FIGURE 1. DC OUTPUT INTERFACE MODULE & OPTIONAL FACEPLATE

1.0 INTRODUCTION

Each DC Output Interface Module (part 502-02954-00) allows the user to control up to eight independent 8 to 30 volt dc circuits. Total current output for a DC Output Interface module is limited to 1 ampere. A user-furnished dc power supply must be connected to the module to provide a source voltage. This voltage is distributed to the loads by transistors acting as solid-state switches. Alternatively, wiring connections to the module may be configured to sink current from the loads. Both positive and negative circuits may be controlled. An electronic current limit circuit is provided to prevent damage to the module from excessive loads. The microcomputer bus is optically isolated from the transistor switches for reliable operation in electrically noisy environments.

External devices are connected to the module through either a 36-pin card edge connector or a DC Output Interface Faceplate (shown in FIGURE 1). The latter option permits simplified wiring connections to be made to compression screw terminals.

2.0 INSTALLATION

IMPORTANT

ENSURE THAT POWER TO THE CARD RACK IS OFF BEFORE INSERTING OR REMOVING THIS OR ANY MICROCOMPUTER MODULE. Failure to do so may result in permanent damage to the module.

DC Output Modules may be installed in the Master Rack or Expansion Racks. The racks are physically keyed to prevent modules from being inserted incorrectly. Set the Address Switches per the instructions in Section 3.0. Make wiring connections to and fasten the card edge connector or faceplate before applying power.

DC OUTPUT INTERFACE MODULE

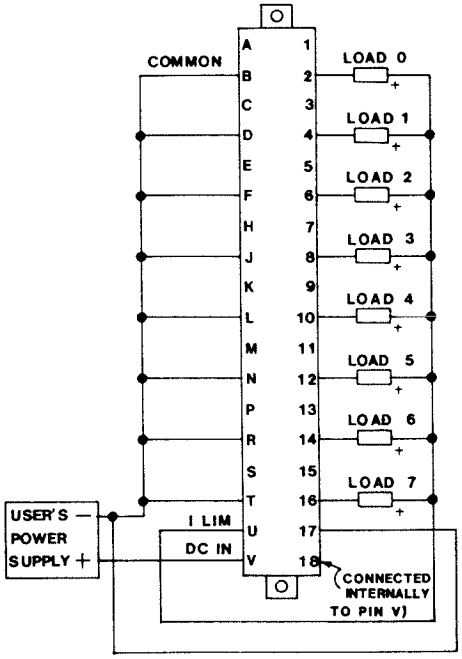

A000046

SINK MODE

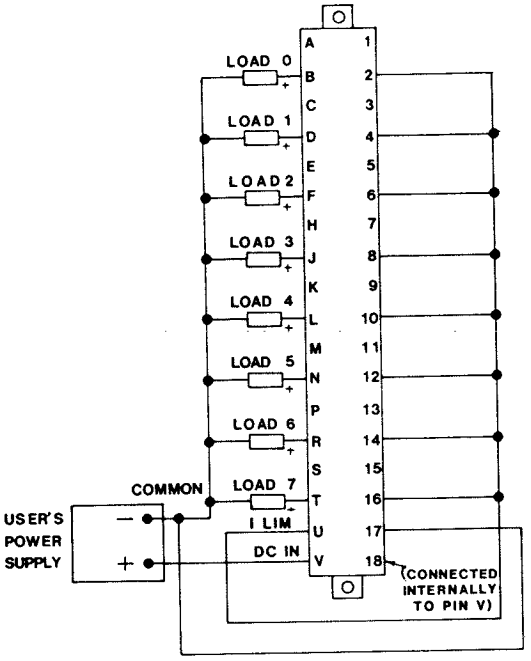

A000047

SOURCE MODE

FIGURE 2. CARD EDGE CONNECTOR WIRING

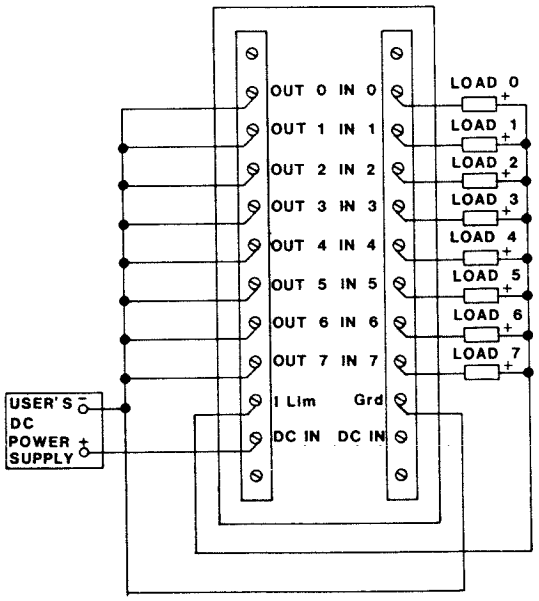

A000051

SINK MODE

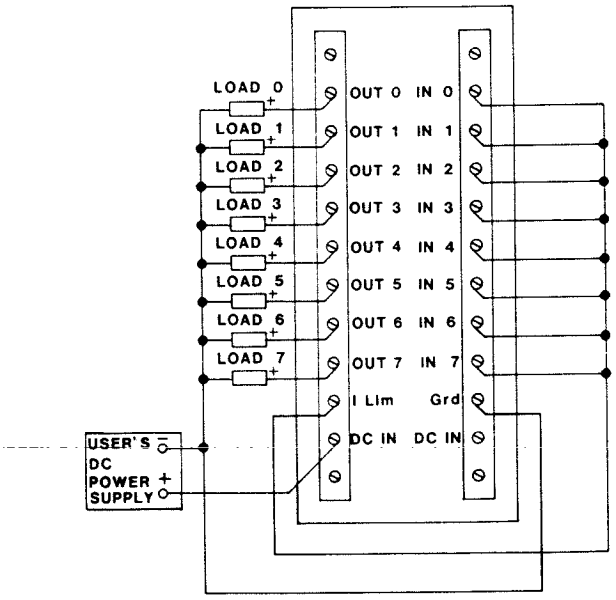

A000050

SOURCE MODE

FIGURE 3. FACEPLATE WIRING

DC OUTPUT INTERFACE MODULE

2.1 CARD EDGE CONNECTOR

A 36-pin card edge connector may be used to connect the DC Output Interface Module to external devices. Phosphor-bronze crimp contacts with gold-over-nickel plating are available. Dummy contacts may be inserted into the connector at unused places for better holding power. A complete eight foot DC Output Interface Harness is available.

The recommended external wiring convention is as follows: V-IN, V-OUT, and LOAD circuits should be No. 20 blue wire; COMMON should be No. 20 white/green wire.

FIGURE 2 illustrates a DC Output Interface Module connected for the current sinking mode. Current for the load is provided by the user power supply through the current limit circuit. The loads are controlled via the return (or negative) sides.

FIGURE 2 also illustrates a DC Output Interface Module connected for the current sourcing mode. Current is provided by the user power supply through the current limit circuit, and distributed to the loads via the positive sides.

2.2 FACEPLATE CONNECTOR

The Faceplate Connector allows wiring connections to be made to compression screw terminals. See FIGURE 3.

3.0 ADDRESSING

Each DC Output Interface Module occupies eight memory locations. The five board-mounted Address Switches must be set for the lowest of the eight addresses desired. The module will be selected when the states of address lines A3 through A7 match the Address Switch settings. A closed Address Switch (handle in the ON position) requires the corresponding address line to be LOW for selection. An open Address Switch (OFF position) requires the address line to be HIGH.

TABLE 1 contains the Address Switch settings for the 32 possible address points.

TABLE 1. ADDRESS SWITCH SETTINGS

PC ADDRESS	SWITCHES 12345	PC ADDRESS	SWITCHES 12345
x000	ON OFF	x128	ON OFF
x008	ON OFF	x136	ON OFF
x016	ON OFF	x144	ON OFF
x024	ON OFF	x152	ON OFF
x032	ON OFF	x160	ON OFF
x040	ON OFF	x168	ON OFF
x048	ON OFF	x176	ON OFF
x056	ON OFF	x184	ON OFF
x064	ON OFF	x192	ON OFF
x072	ON OFF	x200	ON OFF
x080	ON OFF	x208	ON OFF
x088	ON OFF	x216	ON OFF
x096	ON OFF	x224	ON OFF
x104	ON OFF	x232	ON OFF
x112	ON OFF	x240	ON OFF
x120	ON OFF	x248	ON OFF

The PC ADDRESS column may be utilized for coil number suffixes. The leading "x" becomes a decimal number based on the rack in which the board is installed. As seen in TABLE 2, "x" can be 2 through 9.

Rack address assignments are made in 256-address increments. A jumper on the Nest Receiver Board permits one rack to respond to all 256 addresses, or two racks to split the assignment into upper and lower 128-address increments.

TABLE 2. RACK I/O ADDRESSES

RACK NAME	PC ADDRESSES	MAX. I/O PER RACK
MASTER RACK	2000 - 2239	240
1st EXTENSION	3000 - 3255	256
2nd EXTENSION	4000 - 4255	256
3rd EXTENSION	5000 - 5255	256
4th EXTENSION	6000 - 6255	256
5th EXTENSION	7000 - 7255	256
6th EXTENSION	8000 - 8255	256
7th EXTENSION	9000 - 9255	256

4.0 CURRENT LIMIT

A current limit circuit located on the module can be connected by the user to prevent damage to the module in the event of a shorted output. To provide the system with monitoring capabilities, the V-OUT pin of each module current limiter may be connected to a dc input. With proper software, the system will detect and display any boards in a current limit condition. Figure 4 illustrates the proper connections for current limit monitoring.

The signal presented to the DC Input Module will be a high level when the DC Output Interface Module is functioning correctly. When this signal falls to a low level, the dc output circuit is in current limit. Since each DC Output Interface Module has a V-OUT pin, an 8-input DC Input Module can monitor eight DC Output Interface Modules. The current limit circuit will return the module to normal operation when the overload is removed.

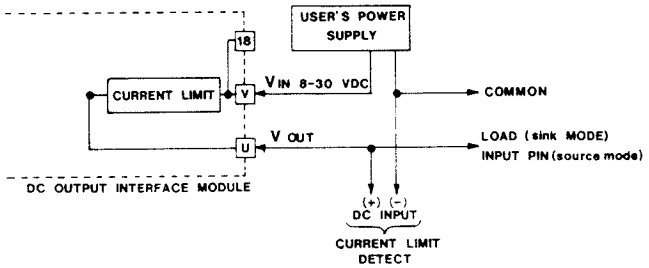

FIGURE 4. CURRENT LIMIT CIRCUIT

5.0 OUTPUT DERATING WITH TEMPERATURE

A given output can pass 1A at 25°C. Under typical conditions at 60°C, an output can safely pass .7A. Under worst case conditions at 70°C, this is reduced to .4A. However, under these same worst case conditions, 1A can be allowed to flow at a 40% duty cycle. The maximum period of the duty cycle is 250 mSec.

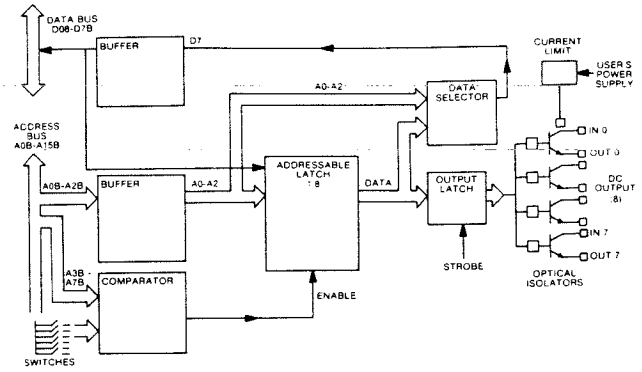

FIGURE 5. BLOCK DIAGRAM

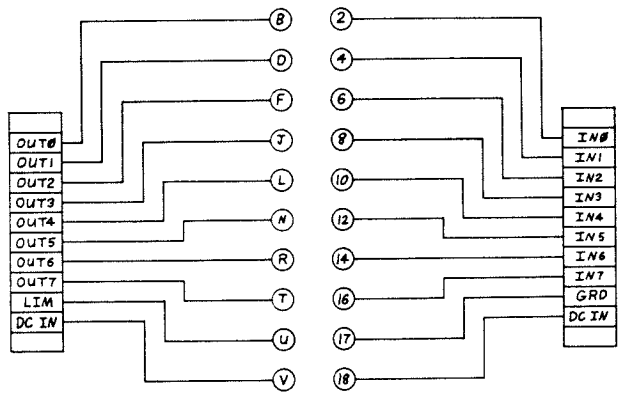

FIGURE 6. FACEPLATE SCHEMATIC

DC OUTPUT INTERFACE MODULE

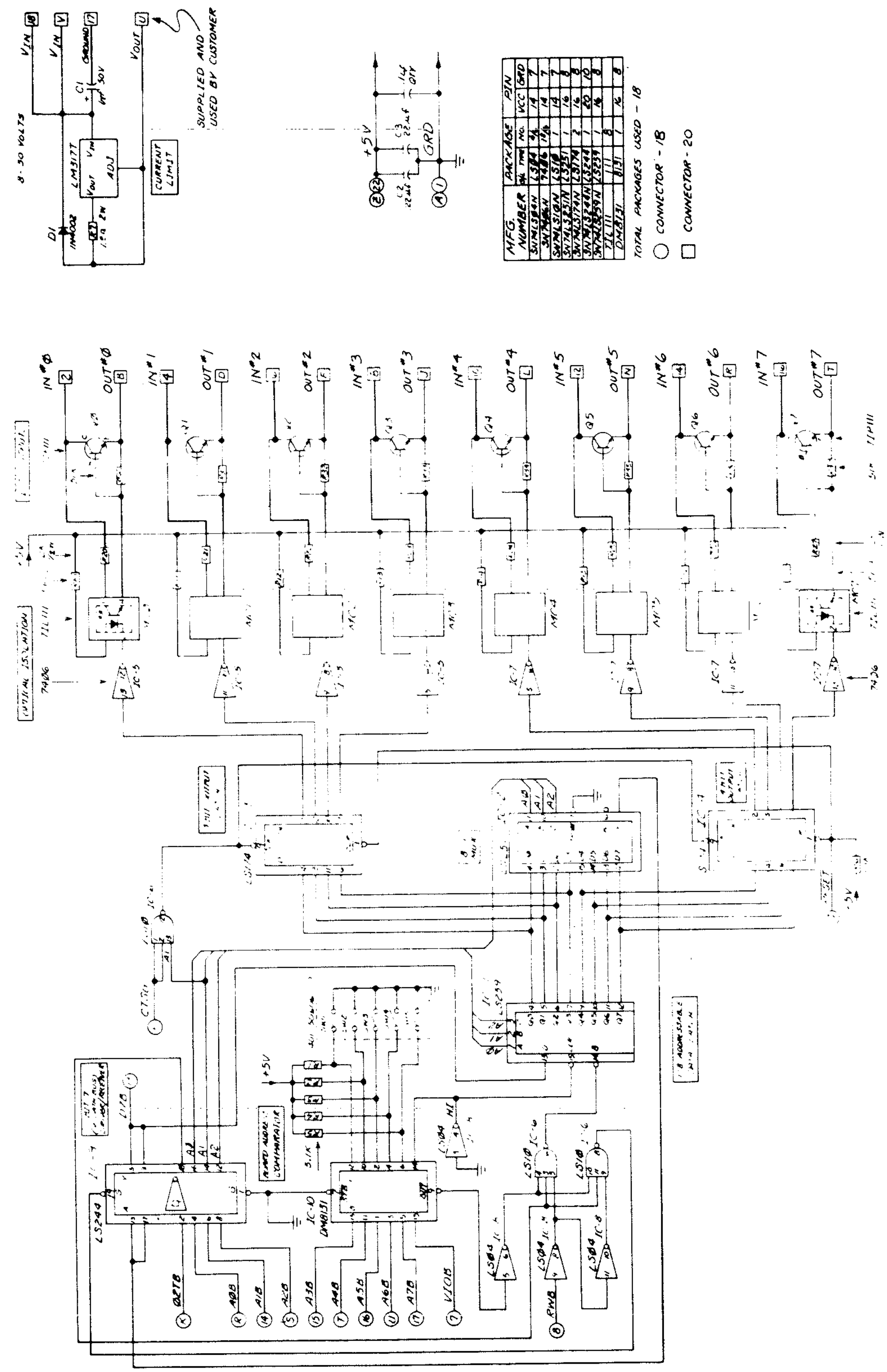

FIGURE 7. DC OUTPUT INTERFACE MODULE SCHEMATIC

PARALLEL TTL I/O MODULE

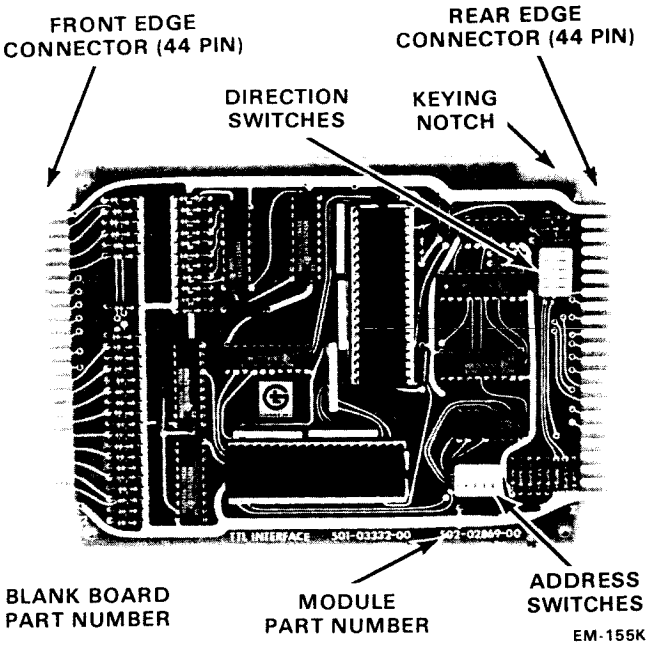

FIGURE 1. PARALLEL TTL I/O MODULE

1.0 INTRODUCTION

The Parallel TTL I/O Module provides interfacing between the Programmable Controller and devices using standard 5-volt TTL logic levels. Four, 8-bit, bi-directional ports and appropriate control lines are buffered and have pull up resistors attached. External devices are wired to the module through a 44-pin card edge connector.

2.0 INSTALLATION

IMPORTANT

ENSURE THAT POWER TO THE CARD RACK IS OFF BEFORE INSERTING OR REMOVING THIS OR ANY MICRO-COMPUTER MODULE. Failure to do so may result in permanent damage to the module.

The TTL I/O Module may only be installed in the Master Rack. Expansion racks are used for AC and DC Input/Output Modules.

The rack is physically keyed to prevent modules from being inserted incorrectly. Set the Address and Direction Switches per the instructions in Sections 3.0 and 2.1 respectively. Make wiring connections to and fasten the card edge connector before applying power.

2.1 DIRECTION SWITCHES

Each TTL I/O Module has four, 8-bit ports with appropriate control lines that are used for communication with a peripheral device. All ports and control lines are buffered to ensure that proper logic levels are received and sent by the modules and the associated peripherals.

TABLE 1. DIRECTION SWITCH SETTINGS

PORT NO.	INPUT OR OUTPUT	DIRECTION SWITCHES (1 2 3 4 5)
1	INPUT	ON / OFF
1	OUTPUT	ON / OFF
2	INPUT	ON / OFF
2	OUTPUT	ON / OFF
3	INPUT	ON / OFF
3	OUTPUT	ON / OFF
4	INPUT	ON / OFF
4	OUTPUT	ON / OFF

The ports are bi-directional; that is, the ports may be configured in software to act as either input or output ports. The buffers connected to these ports must also be configured either as input buffers or as output buffers. A Direction Switch, described in TABLE 1, selects the desired buffer configuration.

2.2 CARD EDGE CONNECTOR

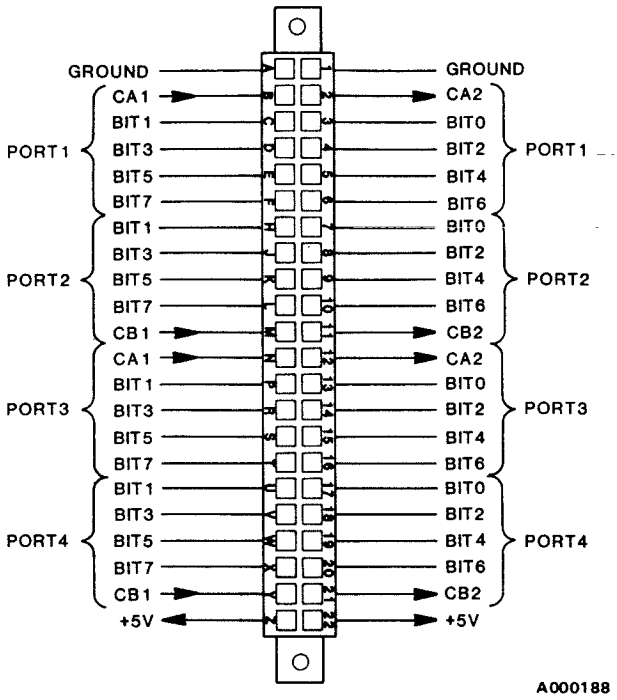

FIGURE 2. CARD EDGE CONNECTOR WIRING

A 44-pin card edge connector is used to attach the TTL I/O Module to external devices. Phosphor bronze crimp contacts with gold-over-nickel plating are available. "Dummy" contacts may be inserted into the connector at unused places for better retentive force. A complete eight-foot harness is available. See FIGURE 2 for connector pinout information.

The recommended external wiring convention is as follows: All connections should be made with #20 blue, except for ground, which should be wired with #20 white/green.

NOTE

This module utilizes 5-volt logic referenced to the system logic ground. To avoid noise pickup and voltage level problems, keep peripheral cabling lengths under ten feet.

3.0 ADDRESSING

Each TTL I/O Module occupies eight memory locations. The five board-mounted Address Switches must be set for the lowest of the eight addresses desired. TABLE 2 contains the Address Switch settings for the 30 possible beginning address points.

TABLE 2. ADDRESS SWITCH SETTING

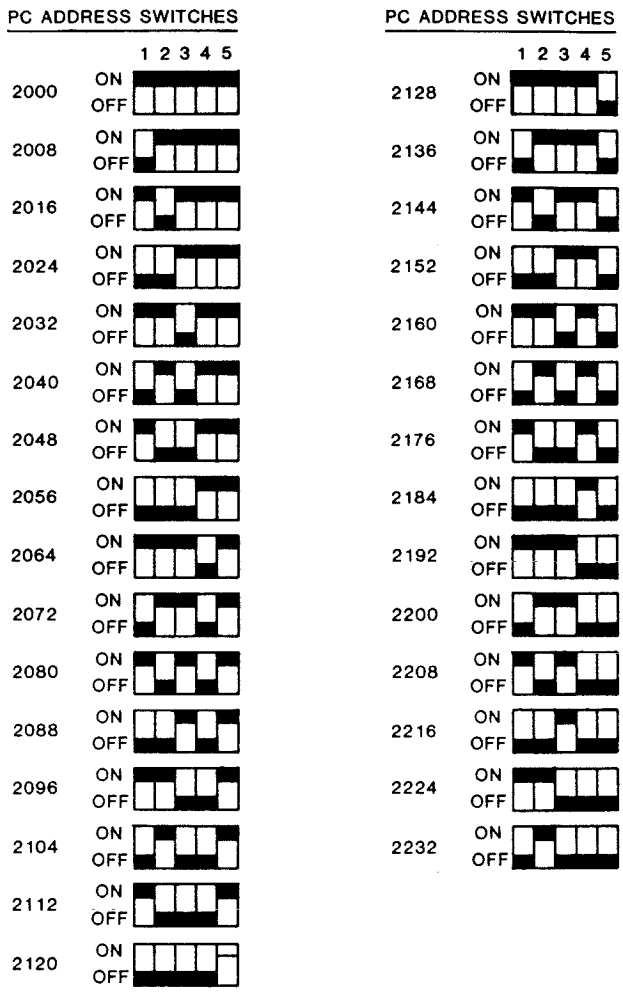

4.0 CIRCUIT CONFIGURATION

The circuit shown in FIGURE 3 is typical of the I/O structure of the module. The circuit appears twice on the module, resulting in four, 8-bit ports and eight control lines (two sets of CA1, CA2, CB1, and CB2). Note that CA2 and CB2 are buffered as outputs from the PIA

PARALLEL TTL I/O MODULE

(Peripheral Interface Adapter). Two 5V and GRD connections are provided. All port lines, and CA1/CB1, are pulled up with resistors to provide logical "high" levels. The buffer TTL I/O Module is capable of sourcing 8mA and sinking 17mA.

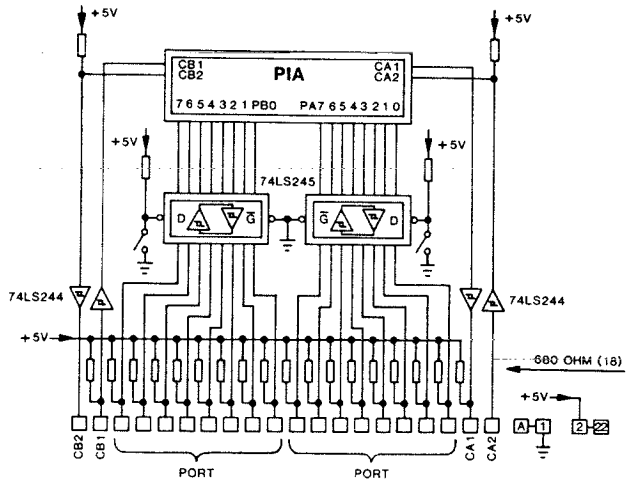

FIGURE 3. I/O CONFIGURATION

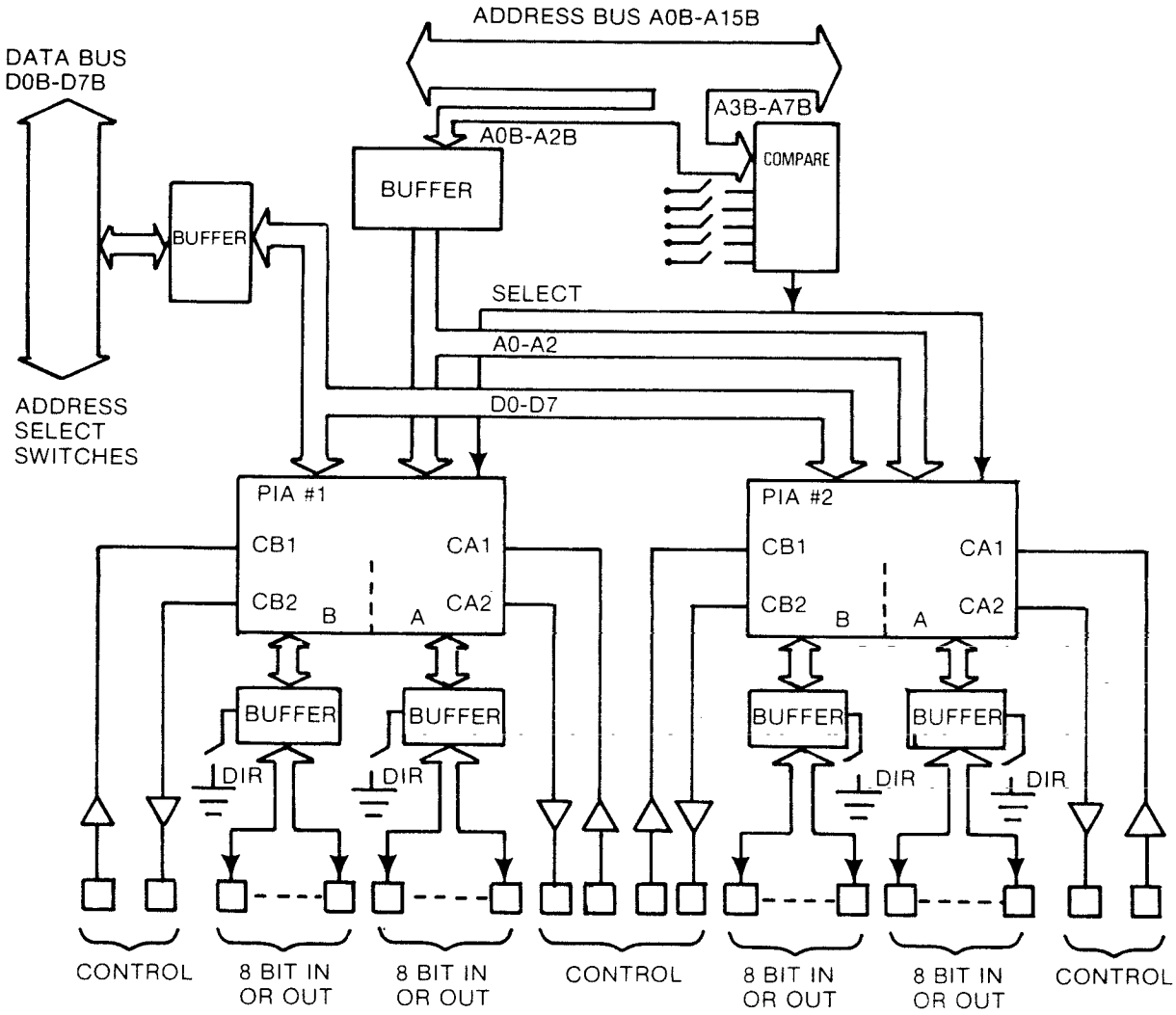

FIGURE 4. BLOCK DIAGRAM

PARALLEL TTL I/O MODULE

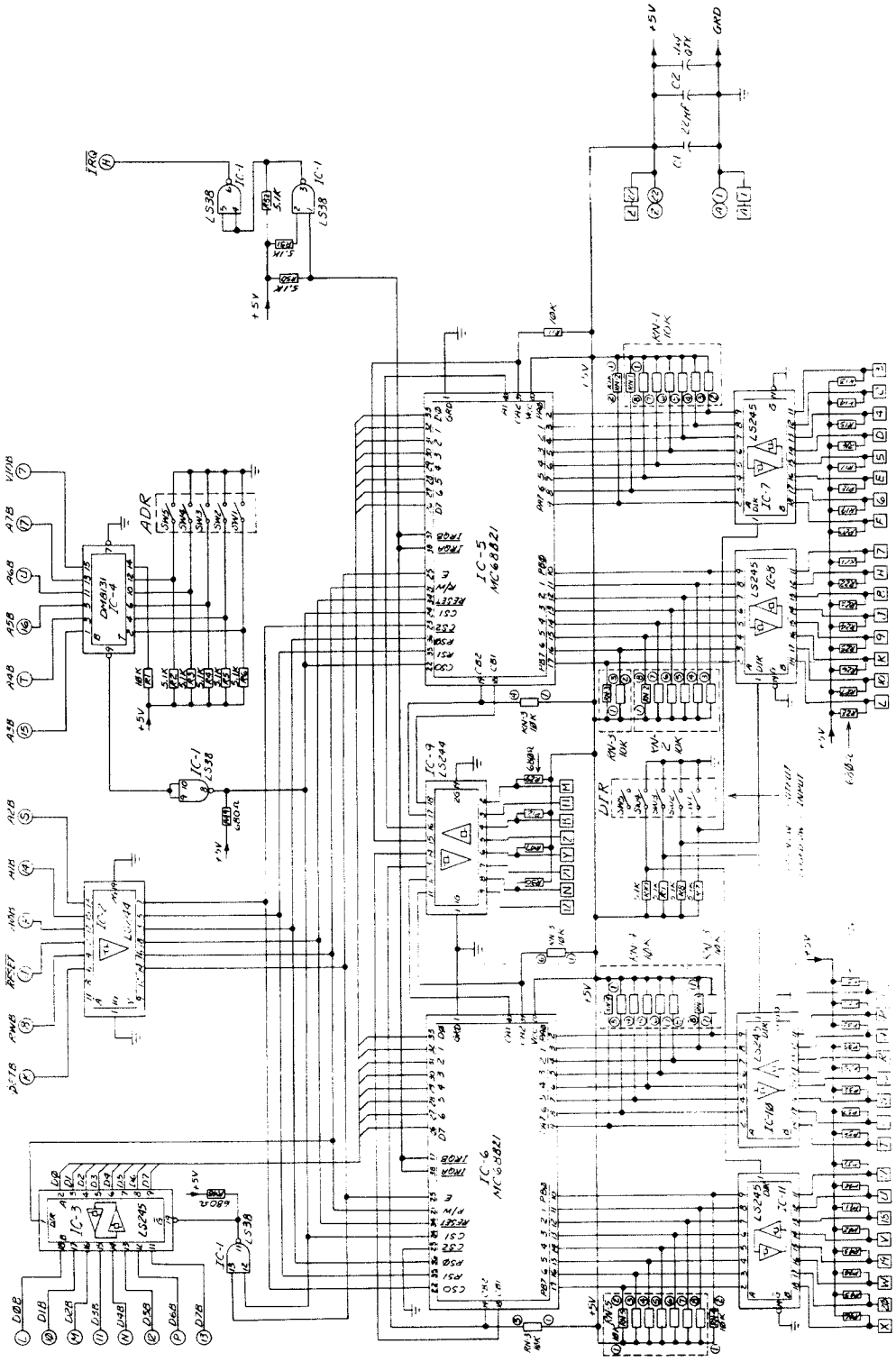

502-02869-20

FIGURE 5. SCHEMATIC

2 AMP DC OUTPUT MODULE

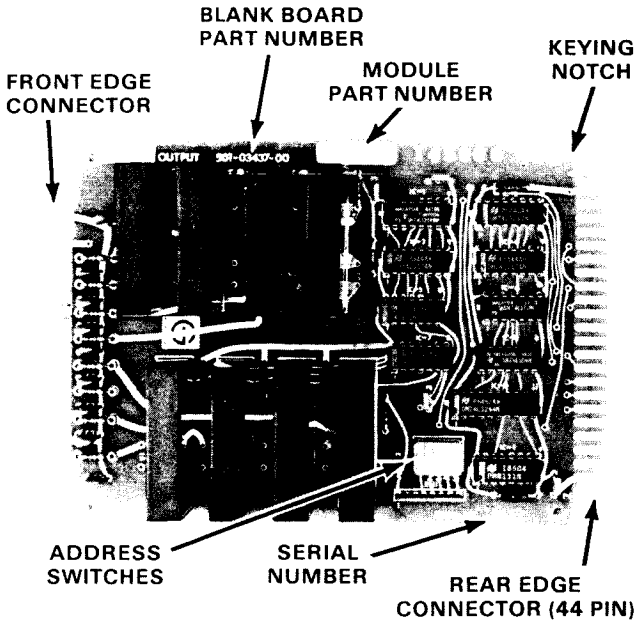

FIGURE 1. 2 AMP DC OUTPUT MODULE

1.0 INTRODUCTION

Each 2 Amp DC Output Module, part no. 502-03381-00, allows the user to control up to eight dc circuits with an operating voltage range of 4-50V dc.

A user-furnished dc power supply must be connected to the module. The dc voltage is distributed to the loads by solid state relays. The solid state relays have internal optical isolation for reliable computer operation in electrically noisy environments. The solid state relays are protected from current overload by on-board fuses. External devices may be connected to the module with a 36-pin card edge connector (see section 2.1).

1.1 CURRENT-CARRYING CAPACITY

The 2 Amp DC Output Module is capable of conducting up to 2 amps of current to each individual load. The maximum total current the module is designed to pass to all eight loads combined is 10 amps. Thus, five loads maximum can draw the peak 2 amp current at one time.

2.0 INSTALLATION

2 Amp DC Output Modules may be installed in the Master Rack or Expansion Racks. The racks are physically keyed to prevent modules from being inserted incorrectly. Set the Address Switches per the instructions in Section 3.0. Make wiring connections to the card edge connector and fasten the connector to the module before applying power.

2.1 CARD EDGE CONNECTOR

A 36-pin card edge connector may be used to connect the 2 Amp DC Output Module to external devices. Phosphor-bronze crimp contacts with gold-over-nickel plating are available. Dummy contacts may be inserted into the connector at unused places for better holding power. A complete 8-foot 2 Amp DC Output harness is available (part no. 502-03385-08).

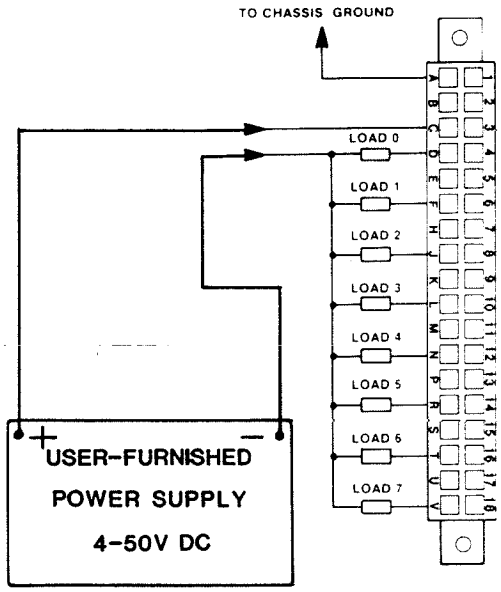

FIGURE 2. CARD EDGE CONNECTOR WIRING

The recommended external wiring convention is as follows: LOAD 0 through LOAD 7 and 4-50 volt dc should be No. 16 blue wire; CHASSIS GROUND should be No. 16 white/green wire.

2 AMP DC OUTPUT MODULE

NOTE

The CHASSIS GROUND pin should be connected to the frame of the card rack as close as possible to this module.

3.0 ADDRESSING

Each 2 Amp DC Output Module occupies eight memory locations. The five board-mounted Address Switches must be set for the lowest of the eight addresses desired.

TABLE 1 contains the Address Switch settings for the 32 possible beginning address points.

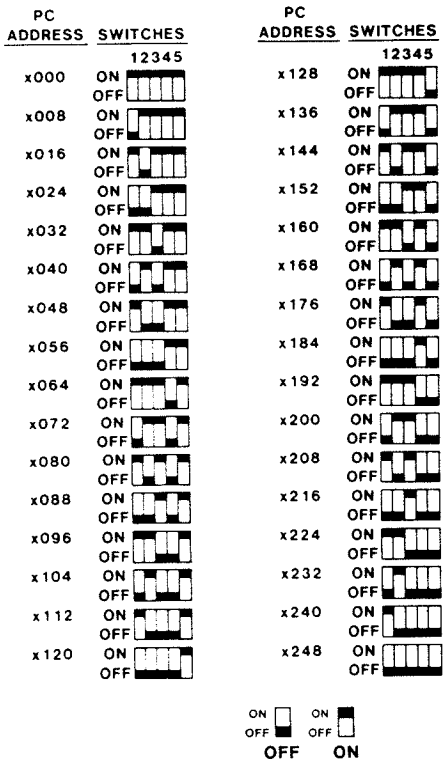

TABLE 1. ADDRESS SWITCH SETTINGS

The PC ADDRESS column in Table 1 may be utilized for coil number suffixes. The leading "x" represents a decimal number based on the rack in which the module is plugged. As seen in TABLE 2, "x" can be 2 through 9.

RACK NAME	PC ADDRESSES	MAX. I/O PER RACK
MASTER RACK	2000 - 2239	240
1st EXTENSION	3000 - 3255	256
2nd EXTENSION	4000 - 4255	256
3rd EXTENSION	5000 - 5255	256
4th EXTENSION	6000 - 6255	256
5th EXTENSION	7000 - 7255	256
6th EXTENSION	8000 - 8255	256
7th EXTENSION	9000 - 9255	256

TABLE 2. RACK I/O ADDRESSES

IMPORTANT

ENSURE THAT POWER TO THE CARD RACK IS OFF BEFORE INSERTING OR REMOVING THIS OR ANY MICROCOMPUTER MODULE. Failure to do so may result in permanent damage to the module.

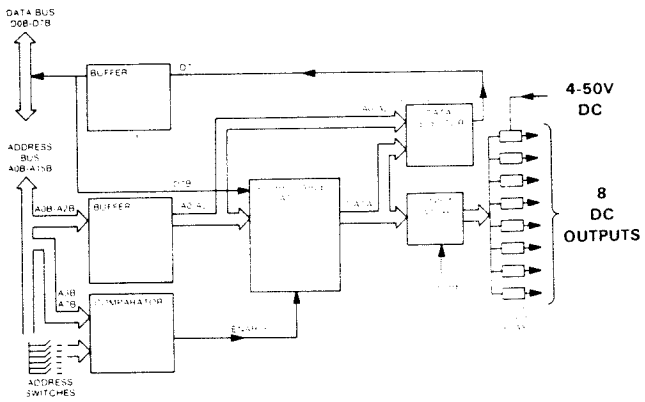

FIGURE 3. BLOCK DIAGRAM

2 AMP DC OUTPUT MODULE

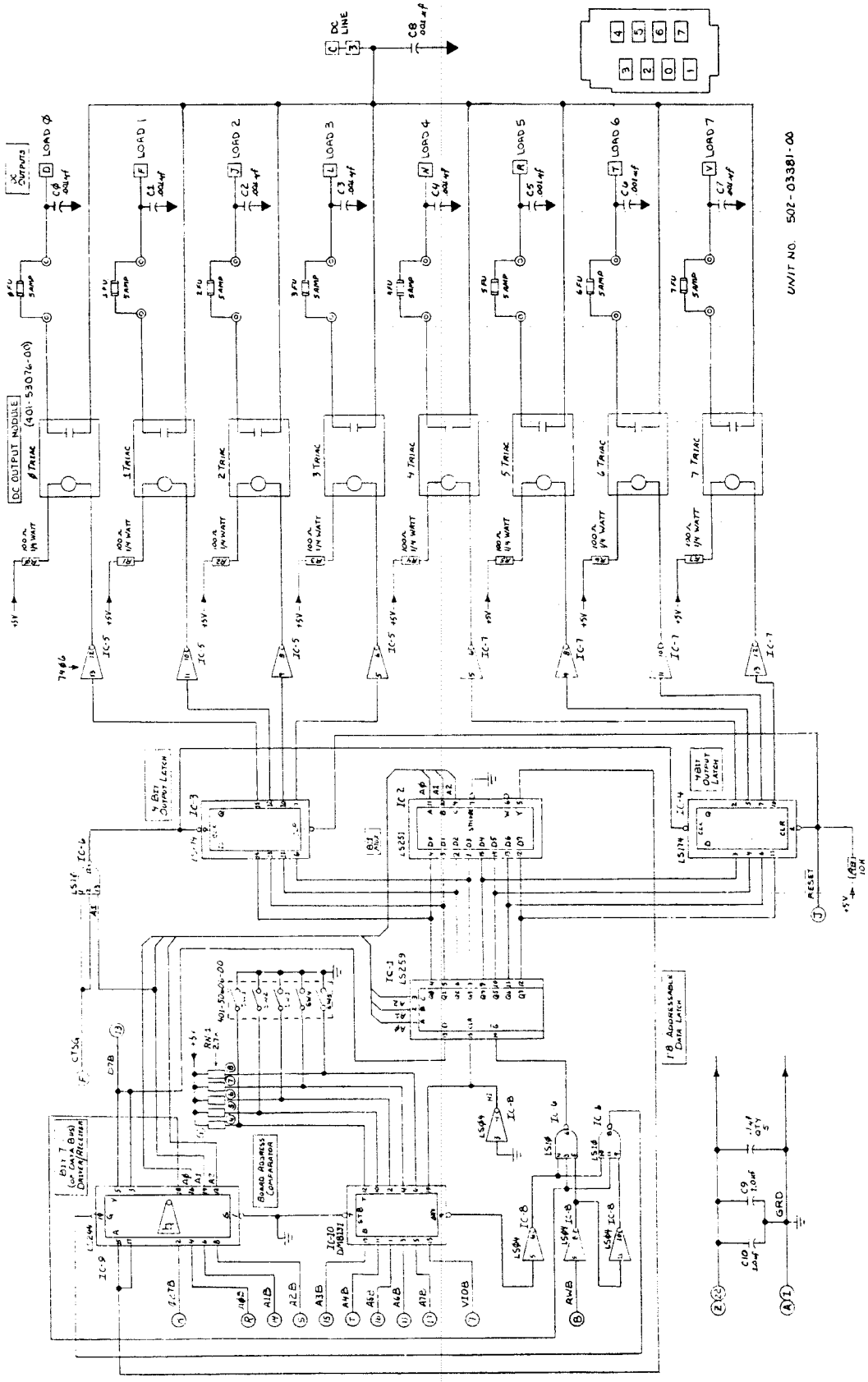

FIGURE 4. MODULE SCHEMATIC

4-20 mA ANALOG OUTPUT MODULE

PHOTOGRAPH NOT AVAILABLE AT PRINTING TIME

1.0 INTRODUCTION

The 4-20 mA Analog Output Module (part no. 502-03443-00) contains the circuitry necessary to generate a DC current level proportional to the binary number stored in it. The output range of 4-20 mA corresponds to the binary equivalent of 0 to 4,095 "counts" input. There is also an optional output range of 0 to 20 mA. An analog multiplexer, with sample-and-hold circuits, permits the module to drive four channels.

The 4-20 mA Analog Output Module interfaces with servo drives and other current-controlled devices through either a card edge connector or an optional faceplate connector. The faceplate option permits convenient wiring connections to be made to compression screw terminals.

NOTE

DO NOT ADJUST ANY OF THE POTENTIOMETERS ON THIS MODULE. ALL ADJUSTMENTS HAVE BEEN MADE AT THE FACTORY.

The digital and analog sections of the module are isolated by optical isolators. The power for the digital section comes off of the backplane. However, the power for the analog section must be provided by a separate external power supply wired to the front edge connector of the module. The external power supply must be able to provide +15V @ 175 mA and -15V @ 50mA.

The maximum allowable load per channel is 500Ω.

IMPORTANT

ENSURE THAT POWER TO THE MASTER RACK IS OFF BEFORE INSERTING OR REMOVING ANY MICROCOMPUTER MODULE. Failure to do so may result in permanent damage to the module.

2.0 INSTALLATION

The 4-20 mA Analog Output Module may only be installed in the Master Rack. Extension Racks are used for AC or DC input and output Modules only.

The Master Rack is physically keyed to prevent modules from being inserted incorrectly. Set the address switches as indicated in Section 4 before inserting the module.

With the power off, insert the module into the Master Rack. Attach a card edge connector or faceplate to the front edge of the module. The wiring for the module is described in Section 4.

4-20 mA ANALOG OUTPUT MODULE

3.0 ADDRESSING

The 4-20 mA Analog Output Module occupies four memory locations. The six module-mounted address switches must be set to the lowest of the four addresses desired. See TABLE 1 for the Address Switch settings of the 60 possible beginning address points.

NOTE

The four addresses chosen for this module must not overlap any memory addresses occupied by another module.

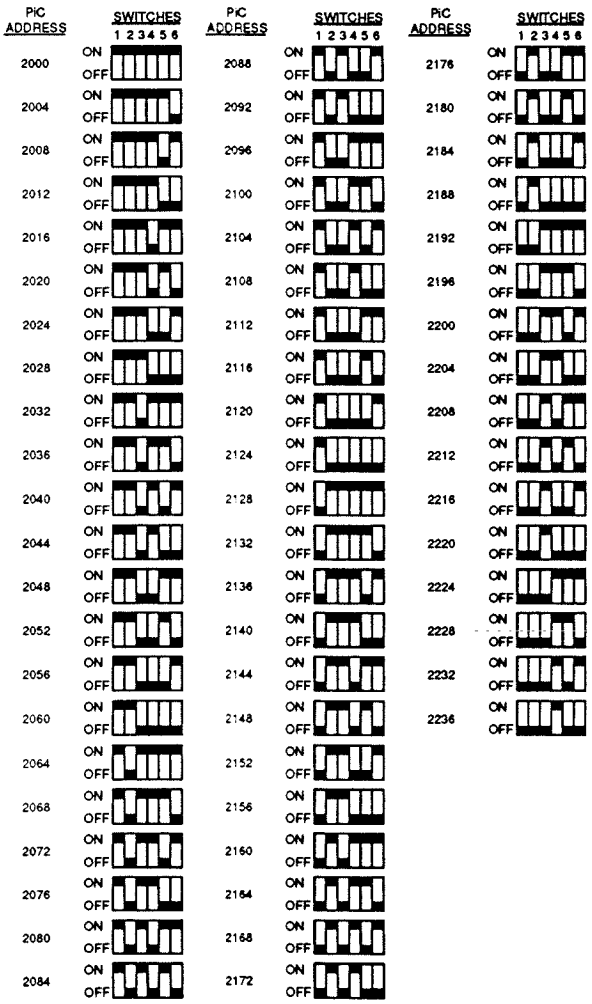

TABLE 1. ADDRESS SWITCH SETTINGS

4.0 HARDWARE INTERFACING

Shielded wire, such as Belden 8762S, should be used for analog device wiring connections. The cable shield should be connected at the device end. Make the wiring connections and attach the card edge connector or faceplate to the front of the module before applying power to the Master Rack.

The terminals labeled COMMON are connected together on the module. These may be used as cable shield terminations if one of them is connected to chassis ground on the device connected to this module.

4.1 CARD EDGE CONNECTOR

A 36-pin card edge connector (part no. 401-50657-00) may be used to connect the module to external devices. See FIGURE 1. Phosphor-bronze crimp contacts (part no. 401-50460-00), with gold over nickel plating, are available. Dummy contacts (part no. 401-50459-00) may be inserted into the connector at unused places for improved holding power.

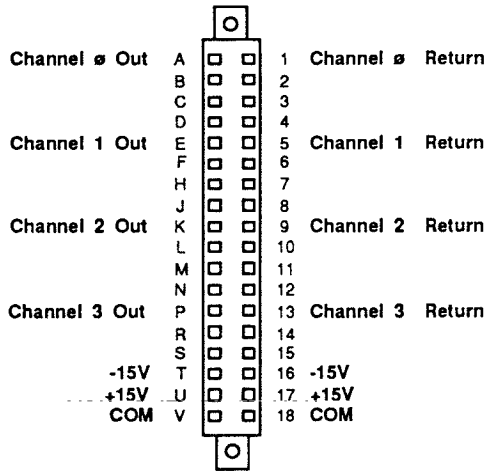

Shields should be tied to chassis or single point ground. Connect unused pins to COM on the Card Edge Connector.

FIGURE 1. CARD EDGE CONNECTOR WIRING

4.2 FACEPLATE CONNECTOR

The optional Faceplate Connector (part no. 502-03444-00) allows wiring to be made to compression screw terminals. See FIGURE 2.

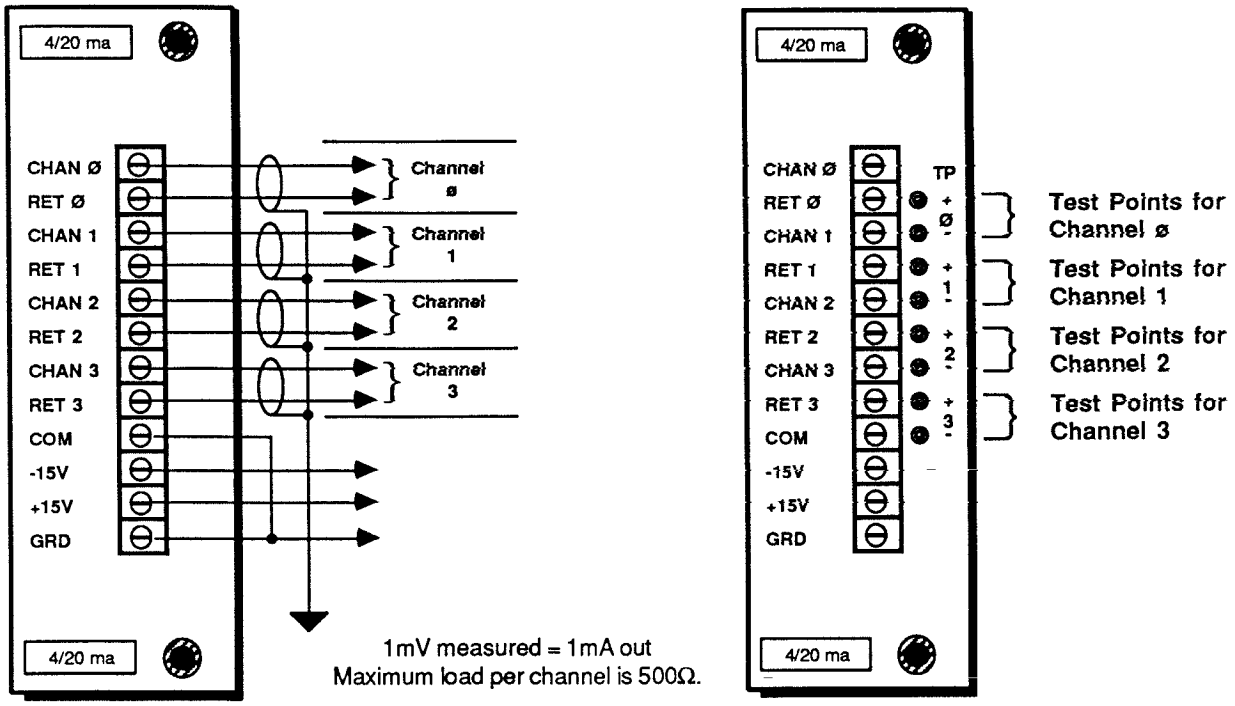

Test points not shown.

Location of Test Points

FIGURE 3. FACEPLATE CONNECTOR WIRING AND TEST POINT LOCATION

5.0 CHANGING THE OUTPUT RANGE

The standard output range for each channel on this module is from 4-20 mA. However, the range for each channel can be set to 0-20 mA by changing the position of the Optional Span Jumpers. Each channel is independent of the others (i.e. Channel A can have a range from 4-20 mA and Channel B can have a range from 0-20 mA). FIGURE 3 shows the locations of the jumpers and their settings. Refer to the inset in the illustration for the optional 0-20 mA setting.

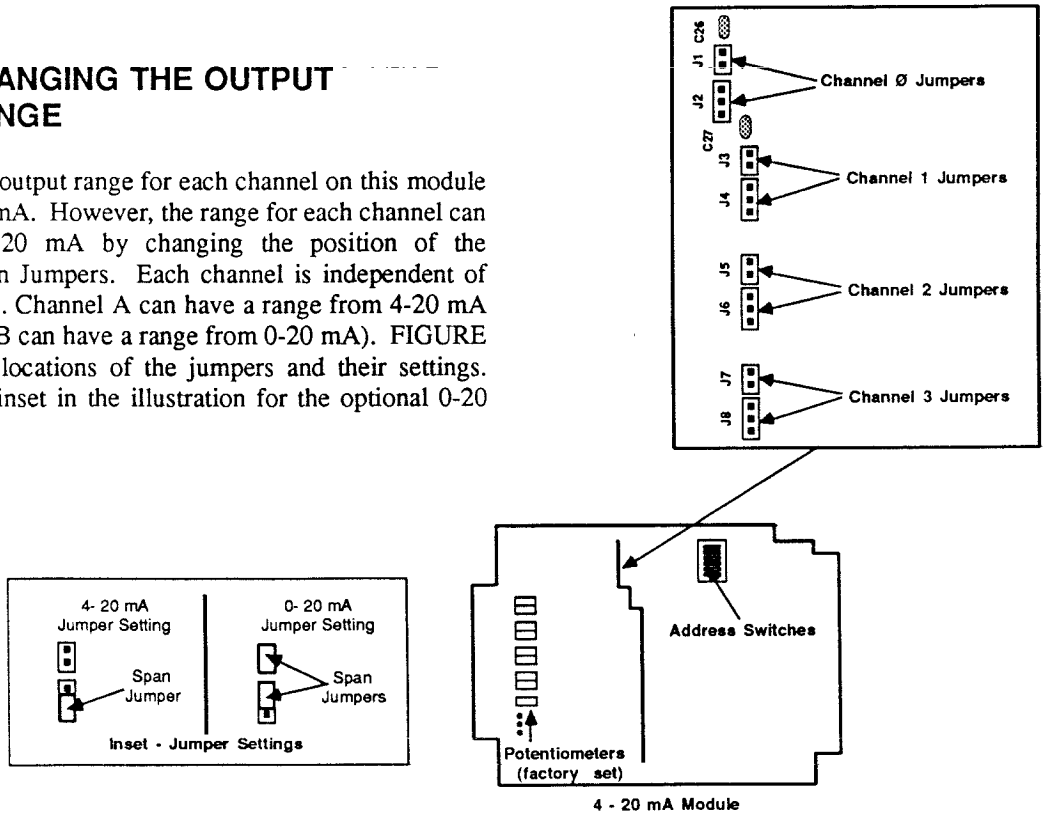

FIGURE 4. JUMPER LOCATIONS AND SETTINGS

4-20 mA ANALOG OUTPUT MODULE

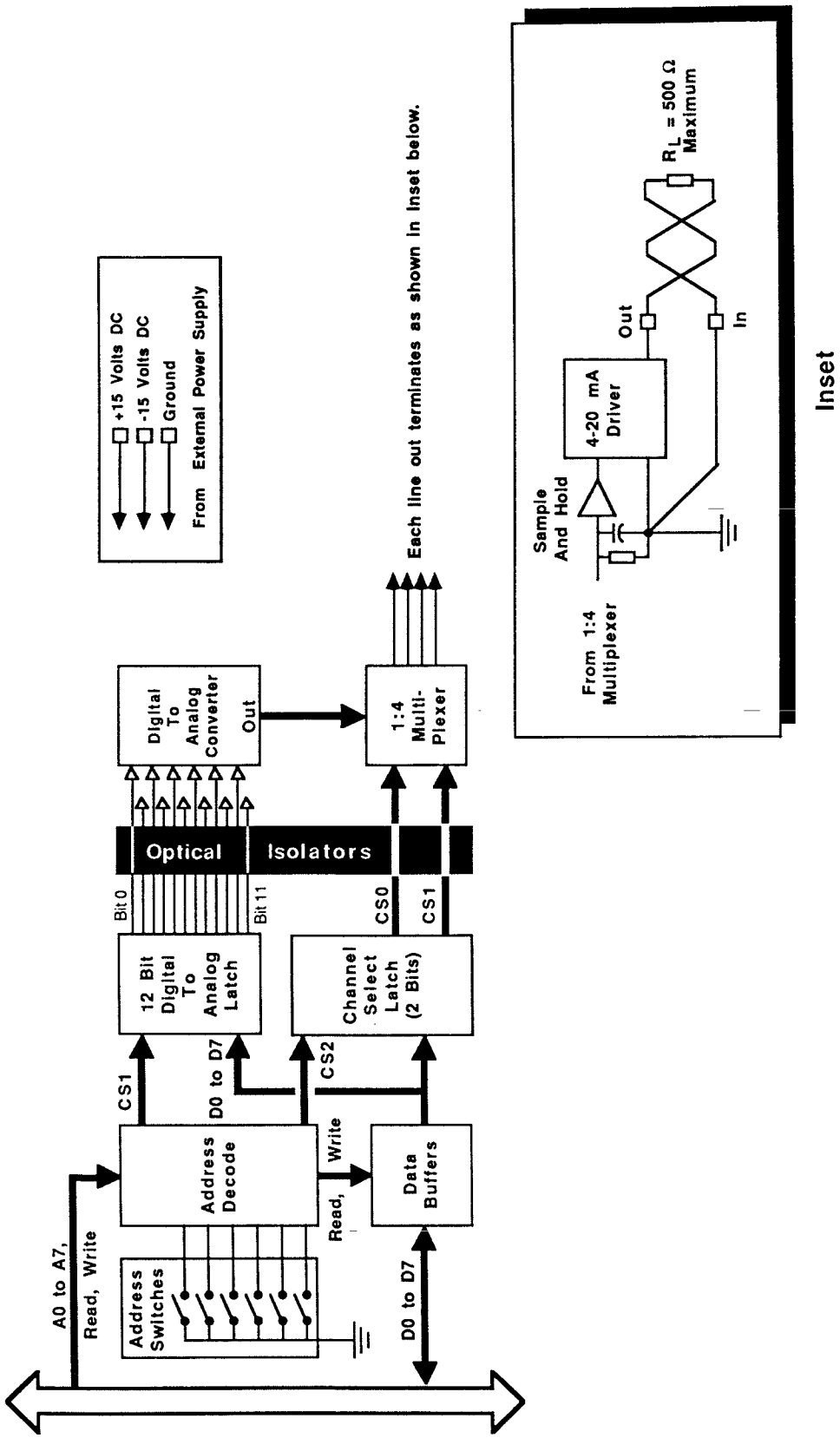

FIGURE 5. BLOCK DIAGRAM

8 AC INPUT MODULE

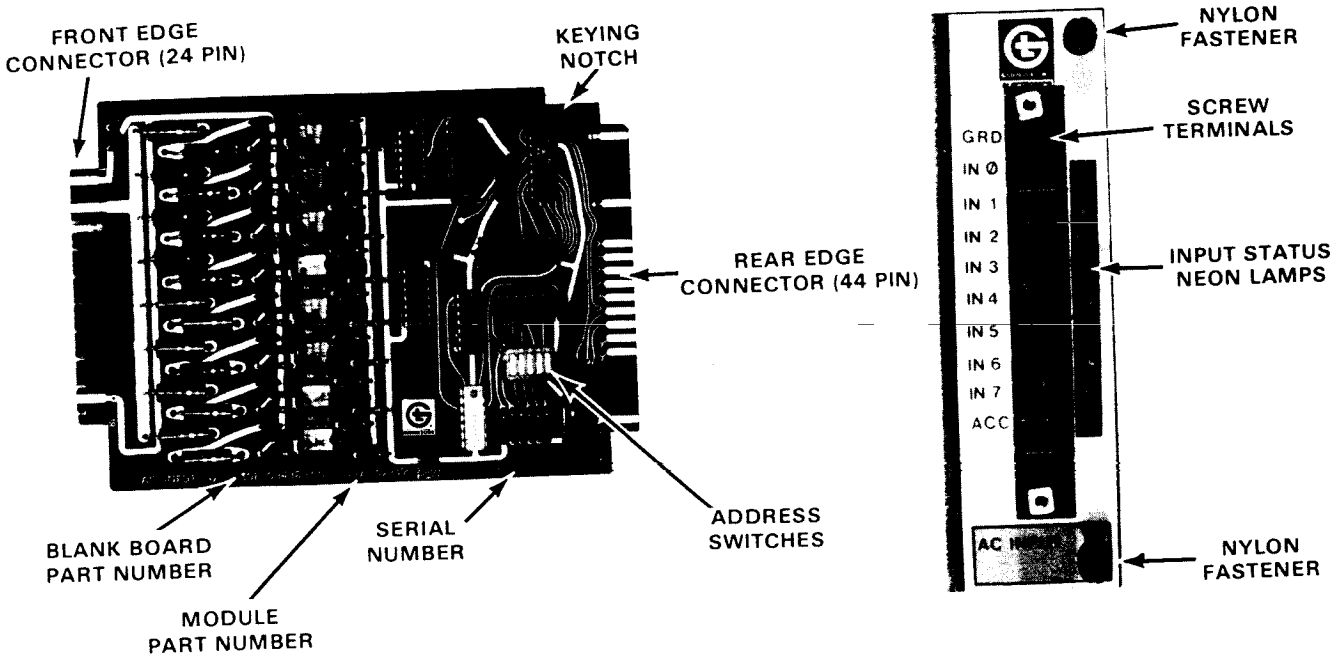

FIGURE 1. 8 AC INPUT MODULE & OPTIONAL FACEPLATE

1.0 INTRODUCTION

Each 8 AC Input Module (part 502-02959-00) allows the user to sense the presence or absence of up to eight 115 volt ac signals. AC Input Module 502-02959-50 is used to sense 230 volt ac signals. The module converts these signals to data in a form that can be used by the CPU.

Input circuits are filtered and optically isolated from the micro-computer bus for reliable operation in electrically noisy environments.

External devices are wired to the module through either a 36-pin card edge connector or an AC Input Faceplate (shown in Figure 1). The latter option permits simplified wiring connections to be made to compression screw terminals and also features eight input status neon lamps.

The AC Input Module input circuit is shown in Figure 2. This circuit is typical of the eight inputs.

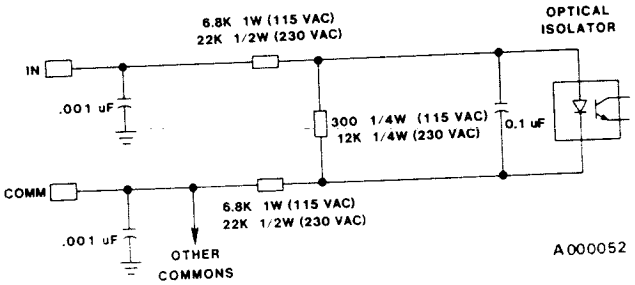

FIGURE 2. INPUT CIRCUIT (1 of 8)

2.0 INSTALLATION

IMPORTANT

ENSURE THAT POWER TO THE CARD RACK IS OFF BEFORE INSERTING OR REMOVING THIS OR ANY MICROCOMPUTER MODULE. Failure to do so may result in permanent damage to the module.

AC Input Modules may be installed in the Master Rack or Expansion Racks. The racks are physically keyed to prevent modules from being inserted incorrectly. Set the Address Switches per the instructions in Section 3.0.

8 AC INPUT MODULE

Make wire connections to and fasten the card edge connector or faceplate before applying power.

2.1 CARD EDGE CONNECTOR

A 36-pin card edge connector may be used to connect the 8 AC Input Module to external devices. Phosphor-bronze crimp contacts, with gold-over-nickel plating, are available. Dummy contacts may be inserted into the connector at unused places for improved holding power. A complete eight foot AC Input Harness is available.

The recommended external wiring convention is as follows: Inputs should be No. 18 red wire; common should be No. 18 white wire; and a green No. 18 wire should be connected from pin 1 or A to chassis ground.

NOTE

The two pins labeled COMMON are internally connected to the input return path. These pins are not connected to the system logic ground.

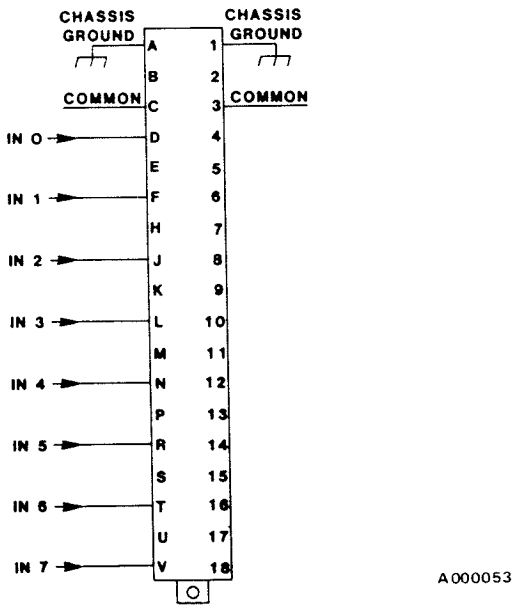

FIGURE 3. CARD EDGE CONNECTOR WIRING

2.2 FACEPLATE CONNECTOR

The faceplate connector allows wiring connections to be made to compression screw terminals. Neon indicators assist in troubleshooting by glowing when an input signal is present.

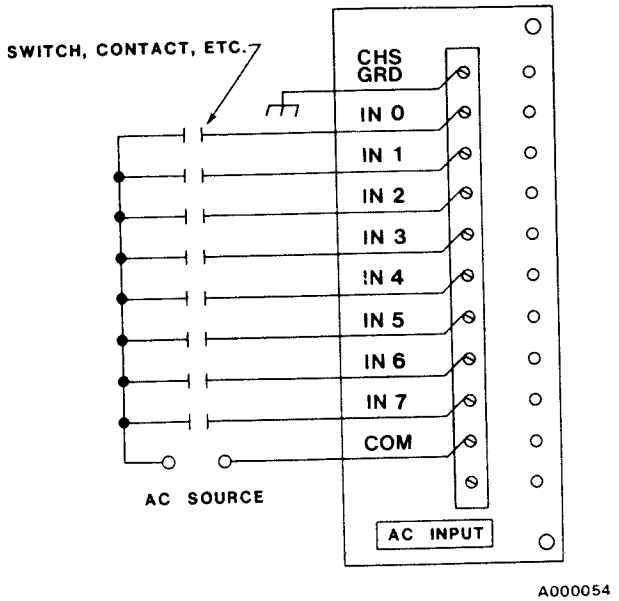

FIGURE 4. FACEPLATE WIRING

3.0 ADDRESSING

TABLE 1. ADDRESS SWITCH SETTINGS

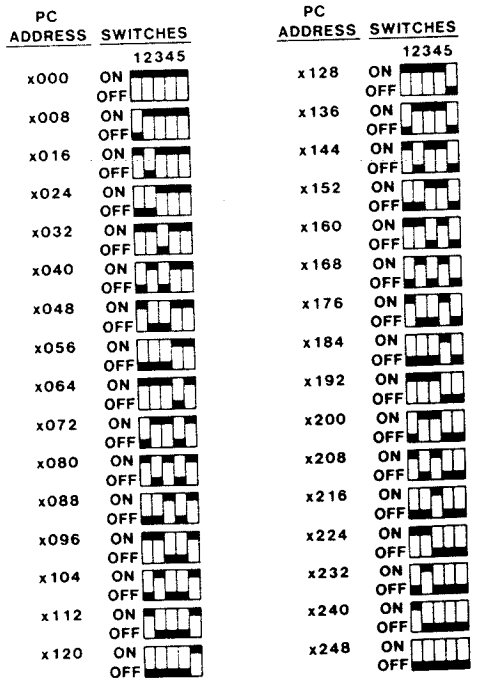

8 AC INPUT MODULE

Each 8 AC Input Module occupies eight memory locations. The five board-mounted Address Switches must be set for the lowest of the eight addresses desired. When the states of address lines A3 through A7 match the Address Switch settings, the module is selected. A closed Address Switch (handle in the ON position) requires the corresponding address line to be LOW for module selection. An open Address Switch (OFF position) requires the address line to be HIGH.

Table 1 contains the Address Switch settings for the 32 possible beginning address points.

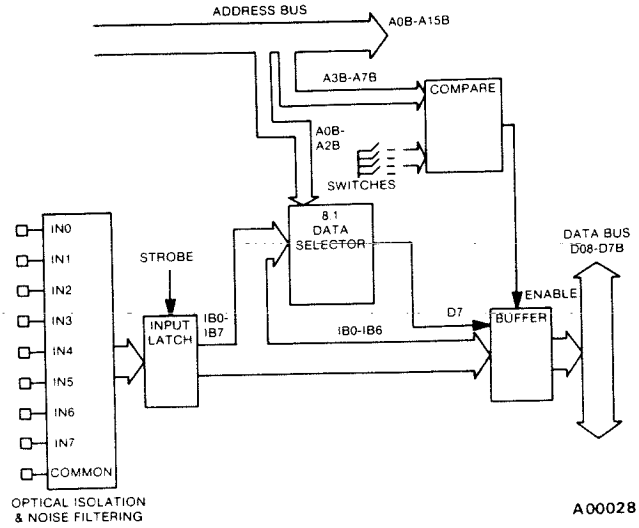

FIGURE 5. BLOCK DIAGRAM

TABLE 2. RACK I/O ADDRESSES

RACK NAME	PC ADDRESSES	MAX. I/O PER RACK
MASTER RACK	2000 - 2239	240
1st EXTENSION	3000 - 3255	256
2nd EXTENSION	4000 - 4255	256
3rd EXTENSION	5000 - 5255	256
4th EXTENSION	6000 - 6255	256
5th EXTENSION	7000 - 7255	256
6th EXTENSION	8000 - 8255	256
7th EXTENSION	9000 - 9255	256

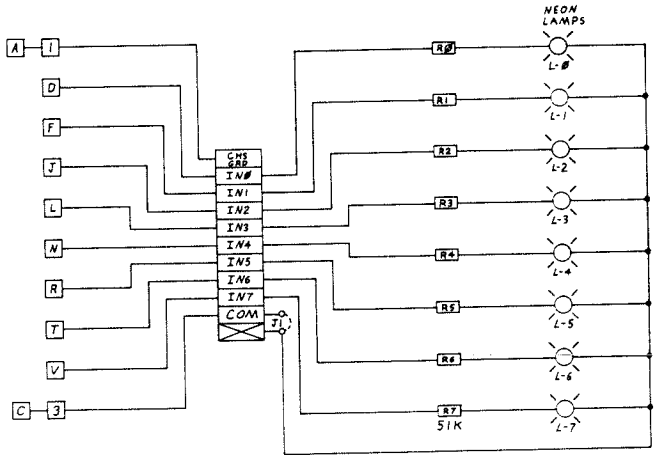

FIGURE 6. FACEPLATE SCHEMATIC

The PC ADDRESS column may be utilized for contact number suffixes. The leading "x" becomes a decimal number that is based on the rack in which the module is installed. As seen in Table 2, "x" can be 2 through 9.

Rack address assignments are made in 256-address increments. A jumper on the Nest Receiver Board permits either one rack to respond to all 256 addresses, or two racks to split the assignments into upper and lower 128-address increments.

8 AC INPUT MODULE

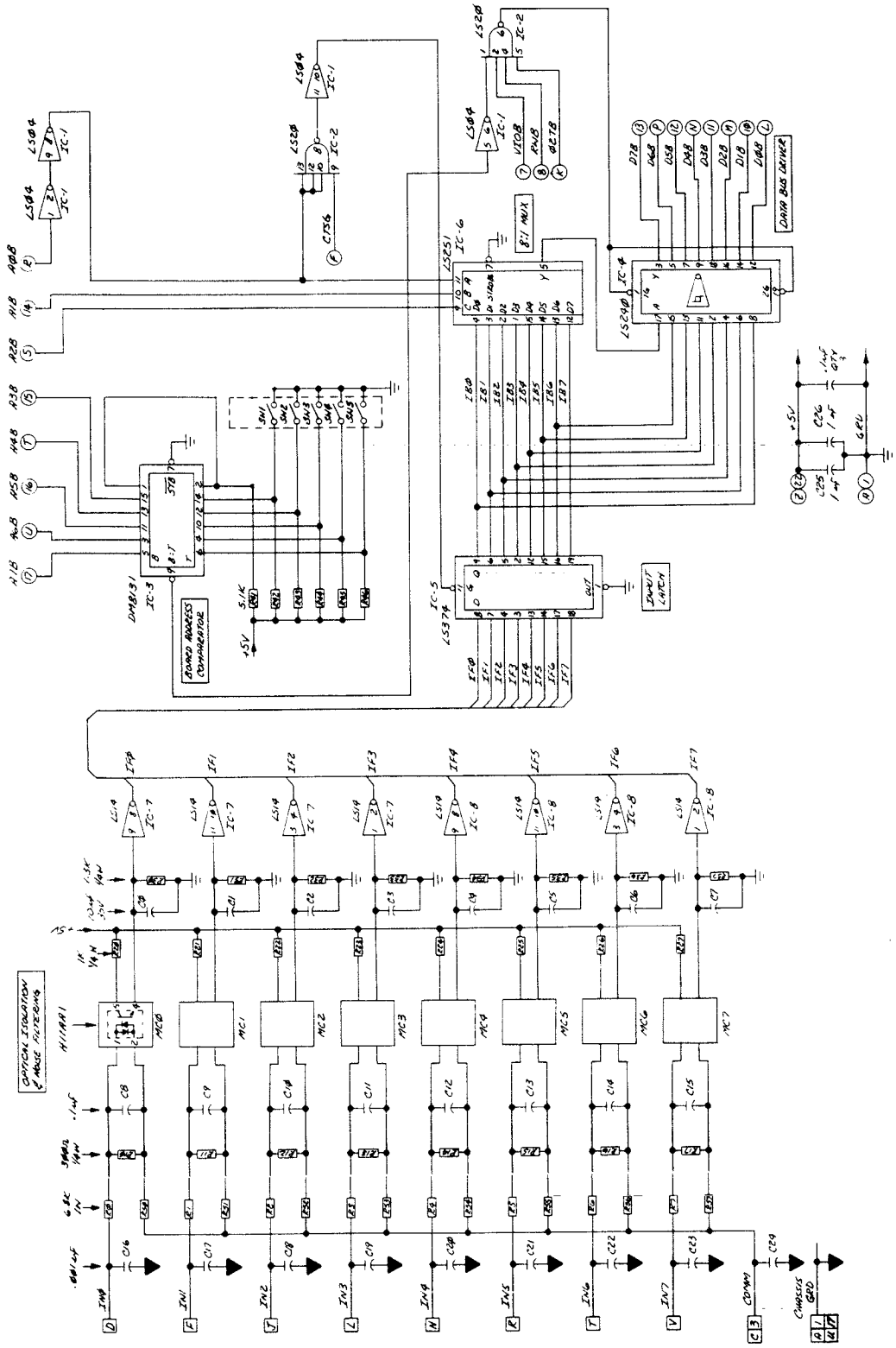

502-02959-00

FIGURE 7. MODULE SCHEMATIC

8 AC OUTPUT MODULE

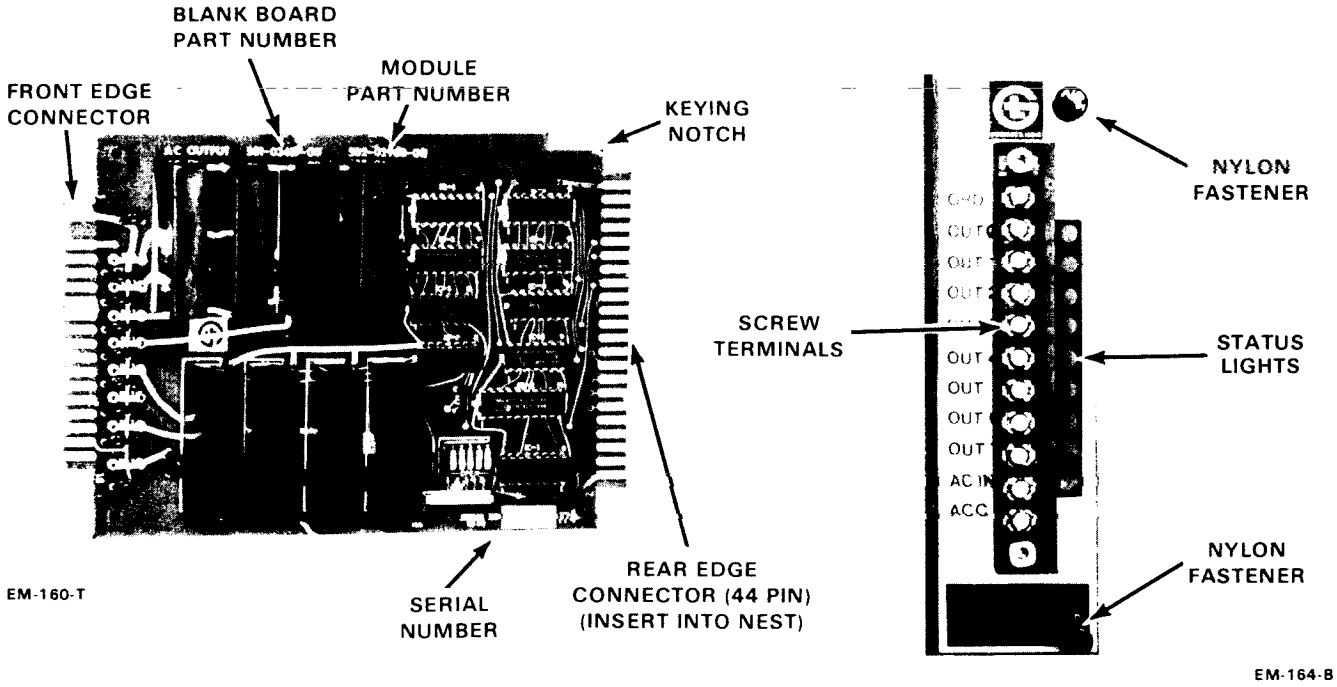

FIGURE 1. 8 AC OUTPUT MODULE & OPTIONAL FACEPLATE

1.0 INTRODUCTION

Each AC Output Module, part 502-02960-00, allows the user to control up to eight 115 volt or 230 volt ac circuits. A user-furnished ac source must be connected to the module. This voltage is distributed to the loads by solid state relays. The solid state relays have internal optical isolation for reliable computer operation in electrically noisy environments. The solid state relays are protected from current overload by on-board fuses and from voltage transients by varistors. External 115 or 230 volt devices may be connected to the module with a 36-pin card edge connector (see section 2.1). 115 volt wiring connections may be done with an 8 AC Output Faceplate (502-03211-00), shown in Figure 1. The latter option permits simplified wiring connections to be made to compression screw terminals and also features eight neon indicators.

2.0 INSTALLATION

AC Output modules may be installed in the Master Rack or Expansion Racks. The racks are physically keyed to prevent modules from being inserted incorrectly. Set the Address Switches per the instructions in Section 3.0. Make wiring connections to and fasten the card edge connector or faceplate before applying power.

IMPORTANT

ENSURE THAT POWER TO THE CARD RACK IS OFF BEFORE INSERTING OR REMOVING THIS OR ANY MICRO-COMPUTER MODULE. Failure to do so may result in permanent damage to the module.

2.1 CARD EDGE CONNECTOR

A 36-pin card edge connector may be used to connect the 8 AC Output Module to external devices. Phosphor-bronze crimp contacts with gold-over-nickel plating are available. Dummy contacts may be inserted into the connector at unused places for better holding power. A complete eight foot AC Output Harness is available.

8 AC OUTPUT MODULE

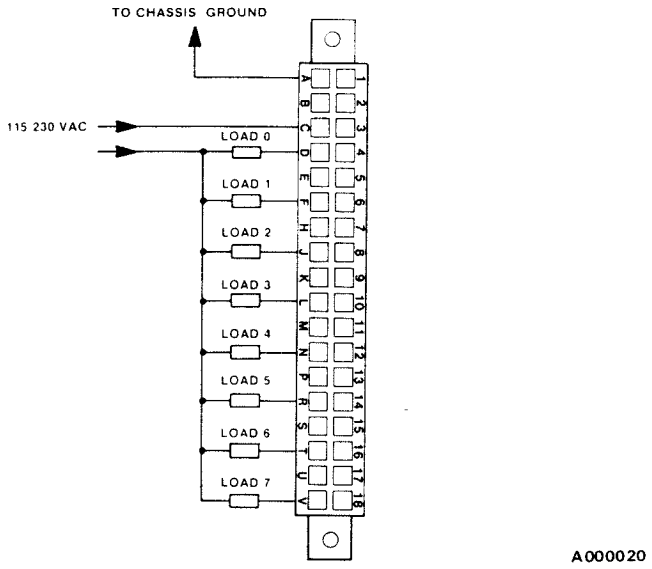

FIGURE 2. CARD EDGE CONNECTOR WIRING

The recommended external wiring convention is as follows: LOAD 0 through LOAD 7 and 115/230 volt ac should be No. 16 red wire; CHASSIS GROUND should be No. 16 green wire.

NOTE

The CHASSIS GROUND pin should be connected to the frame of the card rack as close as possible to this module.

2.2 FACEPLATE CONNECTOR

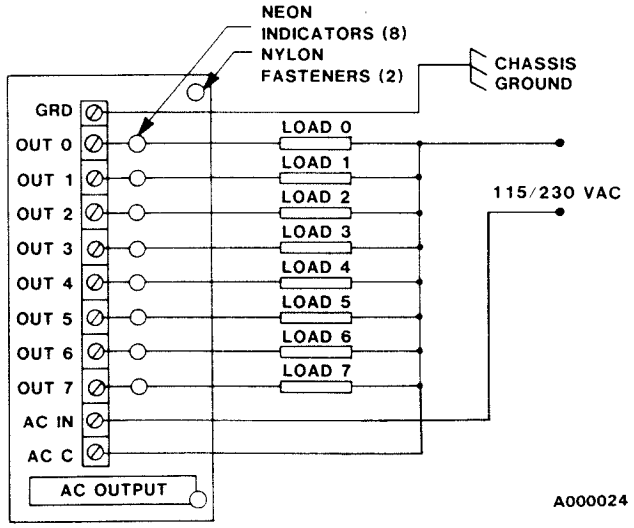

FIGURE 3. FACEPLATE WIRING

The Faceplate Connector allows 115 volt ac wiring connections to be conveniently made to compression screw terminals. Neon indicators assist in troubleshooting by glowing when the respective outputs are energized. Neon indicators on unused outputs will also glow.

3.0 ADDRESSING

Each 8 AC output module occupies eight memory locations. The five board-mounted Address Switches must be set for the lowest of the eight addresses desired. When the state of address lines A3 through A7 match the Address Switch settings, the module is selected. A CLOSED Address Switch (handle in the ON position) requires the corresponding address line to be LOW for selection. An OPEN Address Switch (OFF position) requires the address line to be HIGH.

TABLE 1 contains the Address Switch settings for the 32 possible beginning address points.

TABLE 1. ADDRESS SWITCH SETTINGS

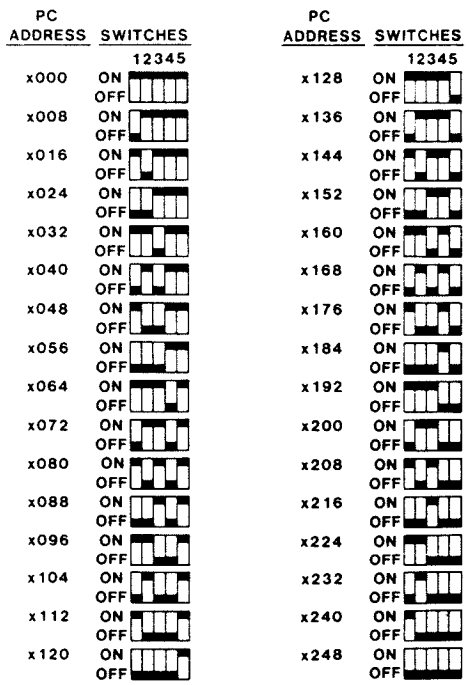

8 AC OUTPUT MODULE

The PC ADDRESS column may be utilized for coil number suffixes. The leading "x" represents a decimal number based on the rack in which the module is plugged. As seen in TABLE 2, "x" can be 2 through 9.

TABLE 2. RACK I/O ADDRESSES

RACK NAME	PC ADDRESSES	MAX. I/O PER RACK
MASTER RACK	2000 - 2239	240
1st EXTENSION	3000 - 3255	256
2nd EXTENSION	4000 - 4255	256
3rd EXTENSION	5000 - 5255	256
4th EXTENSION	6000 - 6255	256
5th EXTENSION	7000 - 7255	256
6th EXTENSION	8000 - 8255	256
7th EXTENSION	9000 - 9255	256

Rack address assignments are made in 256 address increments. A number on the Nest Receiver Board permits one rack to respond to all 256 addresses, or two racks to split the assignment into upper and lower 128 address increments.

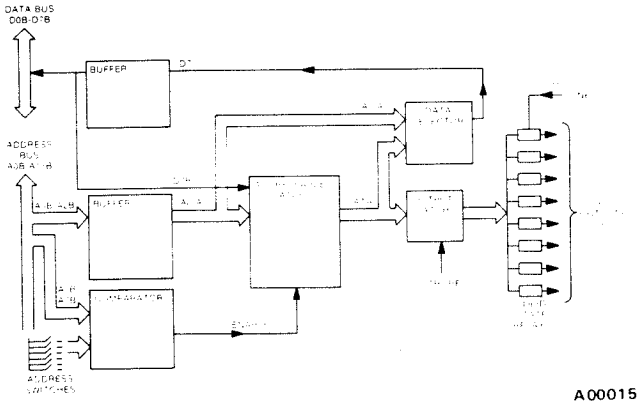

FIGURE 4. BLOCK DIAGRAM

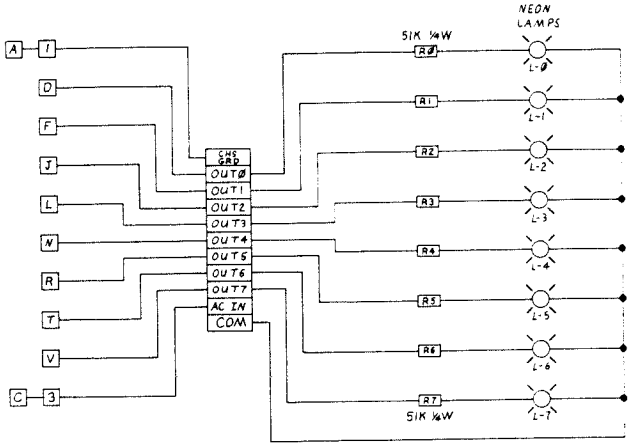

FIGURE 5. FACEPLATE SCHEMATIC

8 AC OUTPUT MODULE

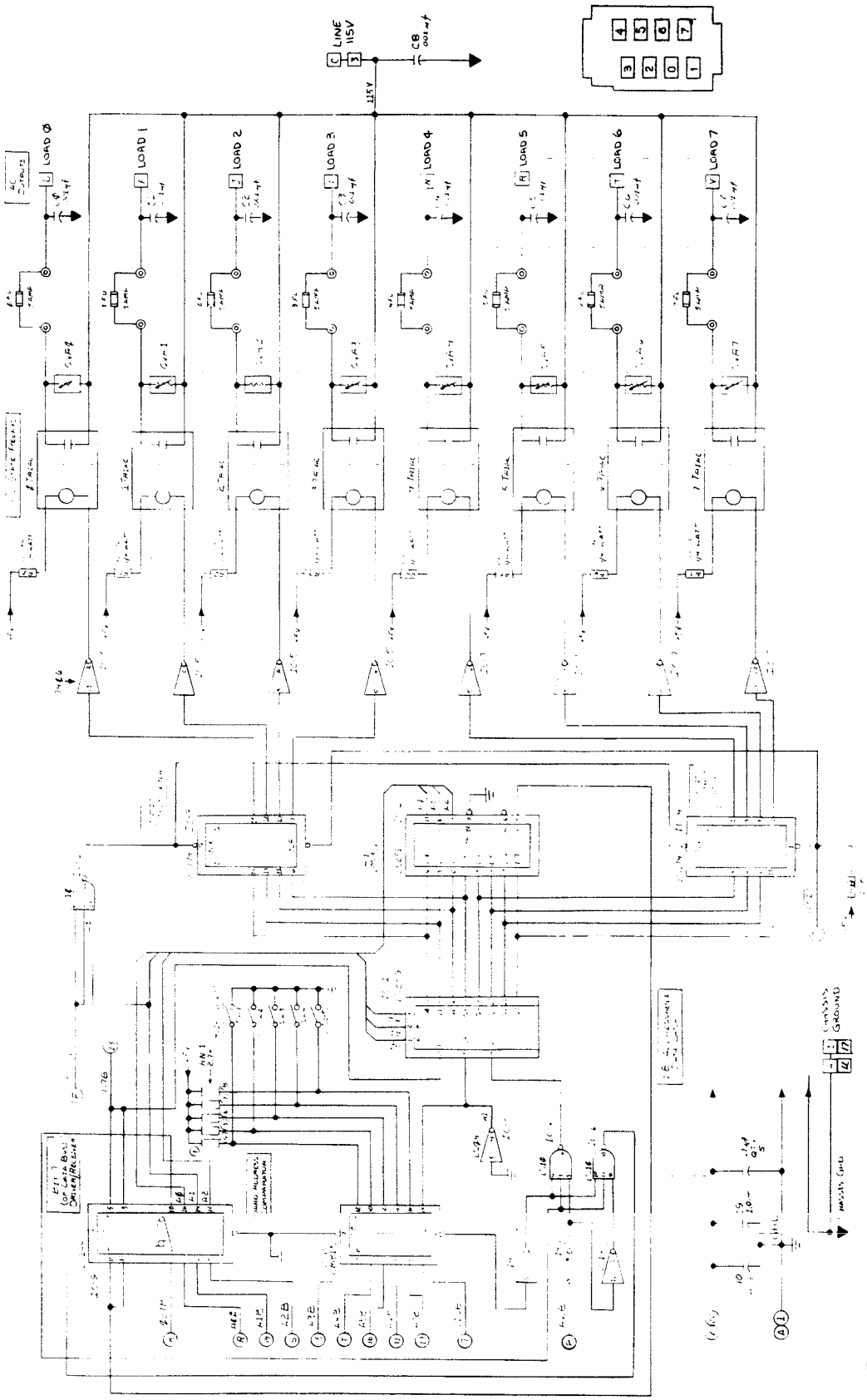

FIGURE 6. 8 AC OUTPUT MODULE SCHEMATIC

24 VOLT-8 AC INPUT MODULE

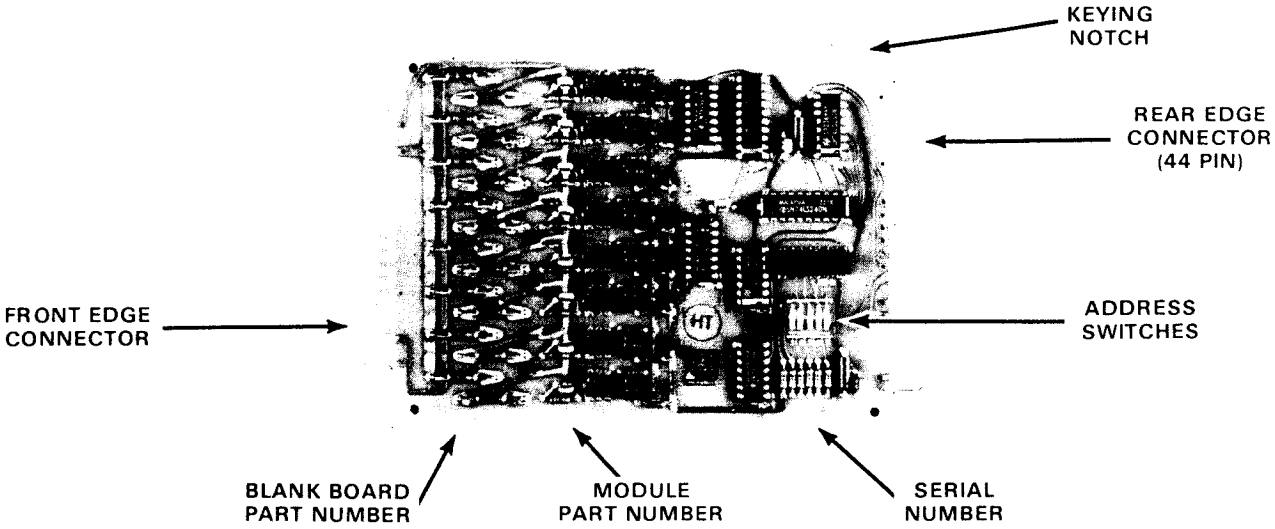

FIGURE 1. 24 VOLT-8 AC INPUT MODULE

1.0 INTRODUCTION

Each 24 volt 8 AC Input Module (part 502-03172-00) allows the user to sense the presence or absence of up to eight 24 volt ac signals. The module converts these signals to data in a form that can be used by the CPU.

Input circuits are filtered and optically isolated from the micro-computer bus for reliable operation in electrically noisy environments.

External 24 volt ac devices are connected to the module through either a 36-pin card edge connector (see Section 2.1) or an AC Input Faceplate (502-02838-10), which is shown in Figure 1. The latter option permits simplified wiring connections to be made to compression screw terminals and also features eight input status LEDs.

2.0 INSTALLATION

AC Input Modules may be installed in the Master Rack or Expansion Racks. The racks are physically keyed to prevent modules from being inserted incorrectly. Set the Address Switches per the instructions in Section 3.0. Make wire connections to and fasten the card edge connector or faceplate before applying power.

IMPORTANT

ENSURE THAT POWER TO THE CARD RACK IS OFF BEFORE INSERTING OR REMOVING THIS OR ANY MICROCOMPUTER MODULE. Failure to do so may result in permanent damage to the module.

2.1 CARD EDGE CONNECTOR

A 36-pin card edge connector may be used to connect the 8 AC Input Module to external devices. Phosphor-bronze crimp contacts, with gold-over-nickel plating, are available. Dummy contacts may be inserted into the connector at unused places for improved holding power. A complete eight foot AC Input Harness is available.

24 VOLT-8 AC INPUT MODULE

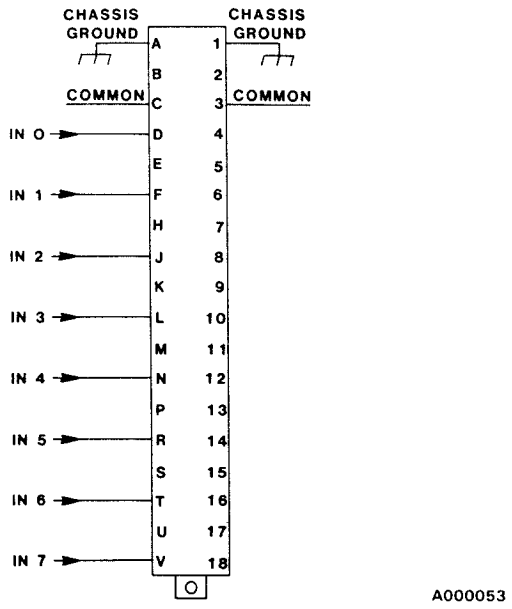

FIGURE 2. CARD EDGE CONNECTOR WIRING

The recommended external wiring convention is as follows: Inputs should be No. 18 red wire; common should be No. 18 white wire; and a green No. 18 wire should be connected from pin 1 or A to chassis ground.

NOTE

The two pins labeled COMMON are internally connected to the input return path. These pins are not connected to the system logic ground.

2.2 FACEPLATE CONNECTOR

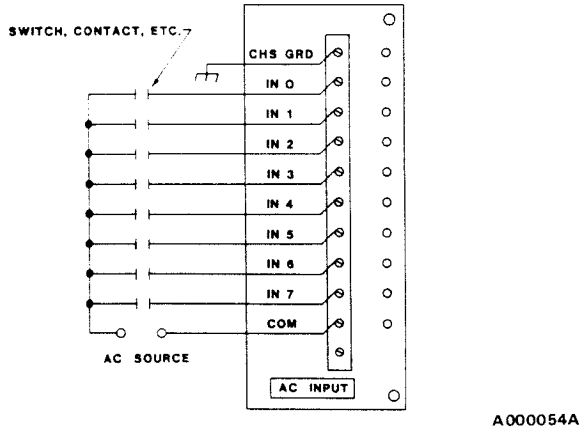

FIGURE 3. FACEPLATE WIRING

The faceplate connector allows wiring connections to be made to compression screw terminals. Neon indicators assist in troubleshooting by glowing when an input signal is present.

3.0 ADDRESSING

Each 8 AC Input Module occupies eight memory locations. The five board-mounted Address Switches must be set for the lowest of the eight addresses desired. When the states of address lines A3 through A7 match the Address Switch settings, the module is selected. A closed Address Switch (handle in the ON position) requires the corresponding address line to be LOW for module selection. An open Address Switch (OFF position) requires the address line to be HIGH.

TABLE 1. ADDRESS SWITCH SETTINGS

PC ADDRESS	SWITCHES 12345	PC ADDRESS	SWITCHES 12345
x000	ON OFF	x128	ON OFF
x008	ON OFF	x136	ON OFF
x016	ON OFF	x144	ON OFF
x024	ON OFF	x152	ON OFF
x032	ON OFF	x160	ON OFF
x040	ON OFF	x168	ON OFF
x048	ON OFF	x176	ON OFF
x056	ON OFF	x184	ON OFF
x064	ON OFF	x192	ON OFF
x072	ON OFF	x200	ON OFF
x080	ON OFF	x208	ON OFF
x088	ON OFF	x216	ON OFF
x096	ON OFF	x224	ON OFF
x104	ON OFF	x232	ON OFF
x112	ON OFF	x240	ON OFF
x120	ON OFF	x248	ON OFF

TABLE 1 contains the Address Switch settings for the 32 possible beginning address points.

24 VOLT-8 AC INPUT MODULE

TABLE 2. RACK I/O ADDRESSES

RACK NAME	PC ADDRESSES	MAX. I/O PER RACK
MASTER RACK	2000 - 2239	240
1st EXTENSION	3000 - 3255	256
2nd EXTENSION	4000 - 4255	256
3rd EXTENSION	5000 - 5255	256
4th EXTENSION	6000 - 6255	256
5th EXTENSION	7000 - 7255	256
6th EXTENSION	8000 - 8255	256
7th EXTENSION	9000 - 9255	256

The PC ADDRESS column may be utilized for contact number suffixes. The leading "x" becomes a decimal number that is based on the rack in which the module is installed. As seen in TABLE 2, "x" can be 2 through 9.

Rack address assignments are made in 256-address increments. A jumper on the Nest Receiver Board permits either one rack to respond to all 256 addresses, or two racks to split the assignments into upper and lower 128-address increments.

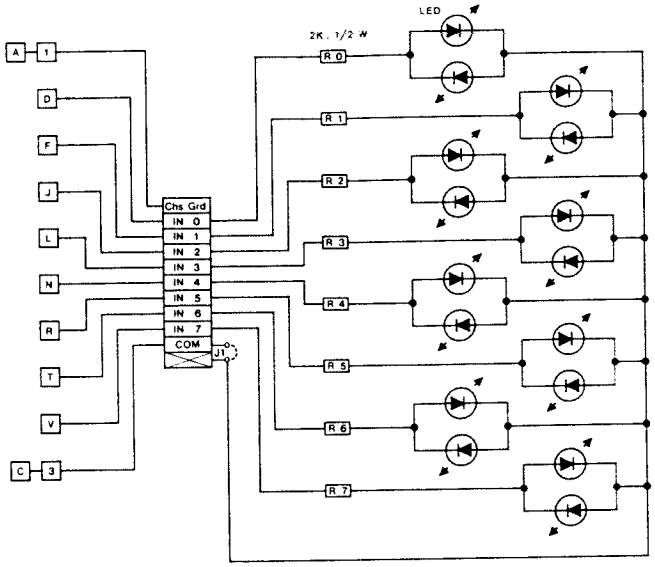

FIGURE 5. FACEPLATE SCHEMATIC

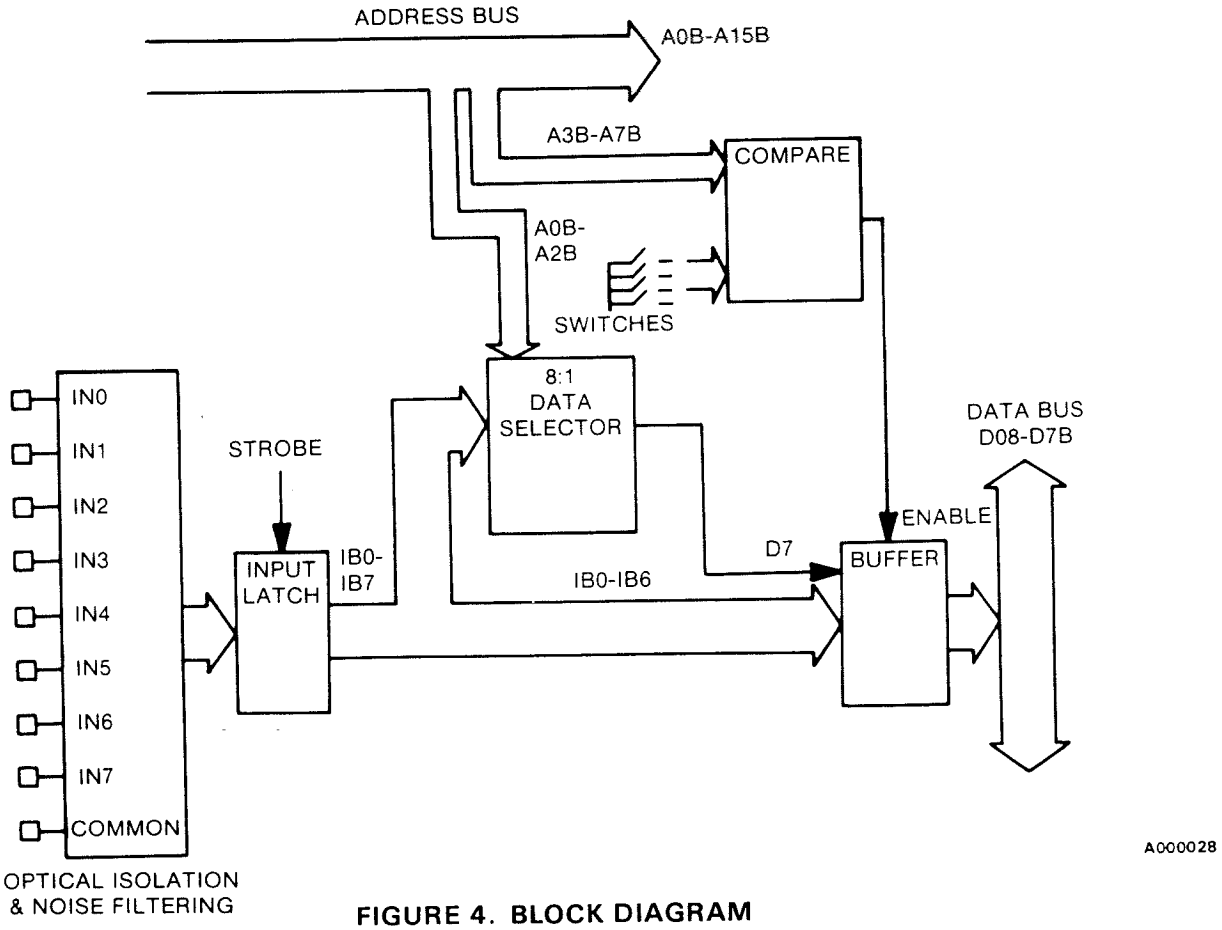

FIGURE 4. BLOCK DIAGRAM

24 VOLT-8 AC INPUT MODULE

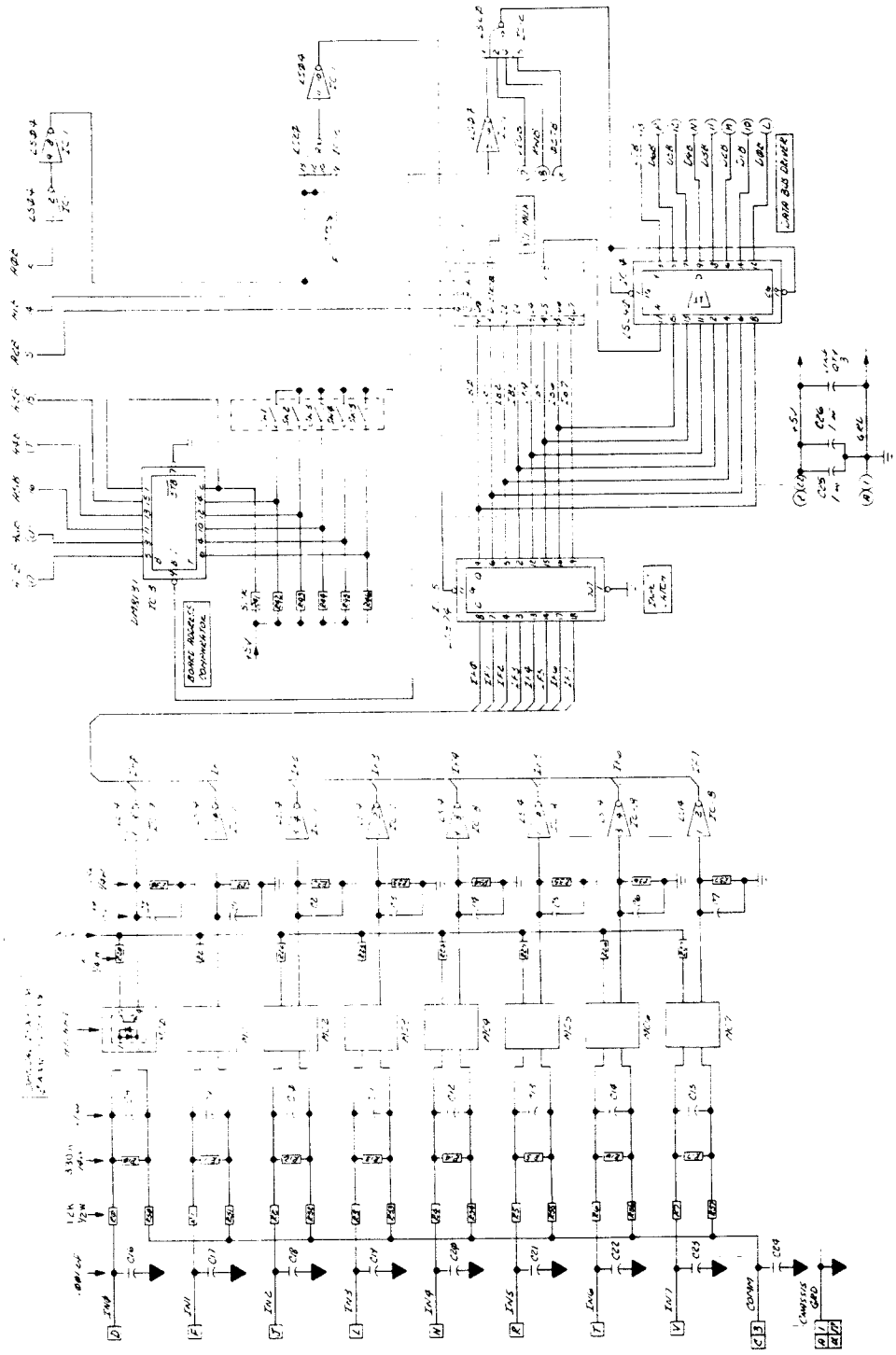

502-03172-00

FIGURE 6. MODULE SCHEMATIC

24 VOLT-8 AC OUTPUT MODULE

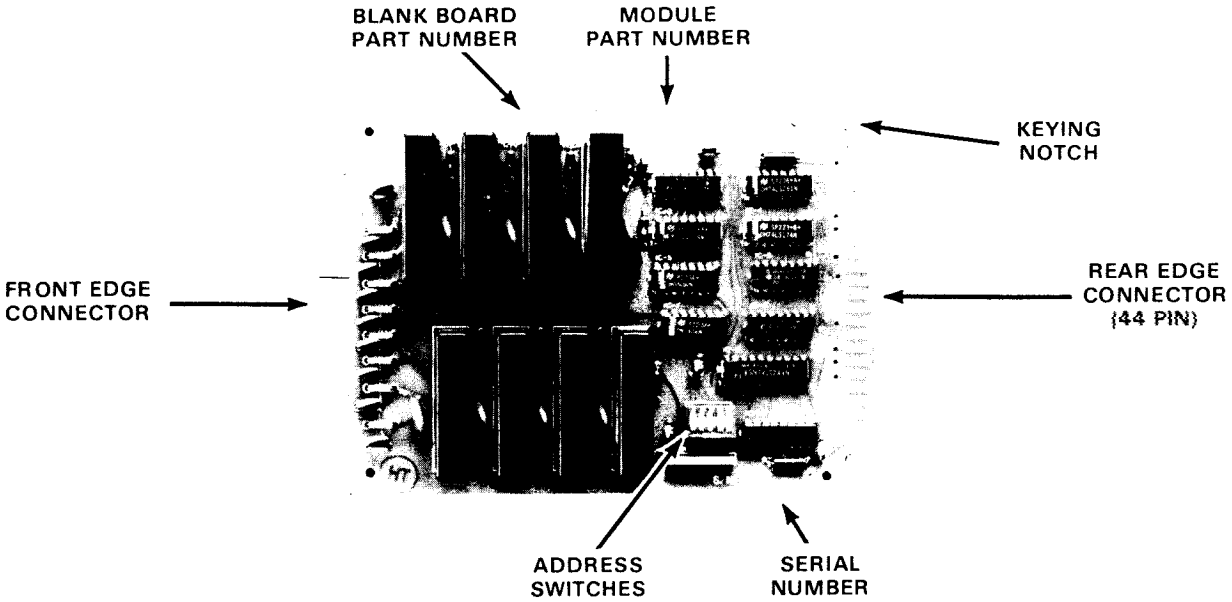

FIGURE 1. 24 VOLT-8 AC OUTPUT MODULE

1.0 INTRODUCTION

Each 24 Volt AC Output Module, part 502-03173-00, allows the user to control up to eight 24 volt ac circuits. A user-furnished ac source must be connected to the module. This voltage is distributed to the loads by solid state relays. The solid state relays have internal optical isolation for reliable computer operation in electrically noisy environments. The solid state relays are protected from current overload by on-board fuses and from voltage transients by varistors. External 24 volt ac devices are connected to the module with a 36-pin card edge connector (see section 2.1), or an 8 AC Output Faceplate (502-02837-10). The latter option permits simplified wiring connections to be made to compression screw terminals and also features eight LED indicators.

2.0 INSTALLATION

AC Output modules may be installed in the Master Rack or Expansion Racks. The racks are physically keyed to prevent modules from being inserted incorrectly. Set the Address Switches per the instructions in Section 3.0. Make wiring connections to and fasten the card edge connector or faceplate before applying power.

IMPORTANT

ENSURE THAT POWER TO THE CARD RACK IS OFF BEFORE INSERTING OR REMOVING THIS OR ANY MICRO-COMPUTER MODULE. Failure to do so may result in permanent damage to the module.

2.1 CARD EDGE CONNECTOR

A 36-pin card edge connector may be used to connect the 8 AC Output Module to external devices. Phosphor-bronze crimp contacts with gold-over-nickel plating are available. Dummy contacts may be inserted into the connector at unused places for better holding power. A complete eight foot AC Output Harness is available.

24 VOLT-8 AC OUTPUT MODULE

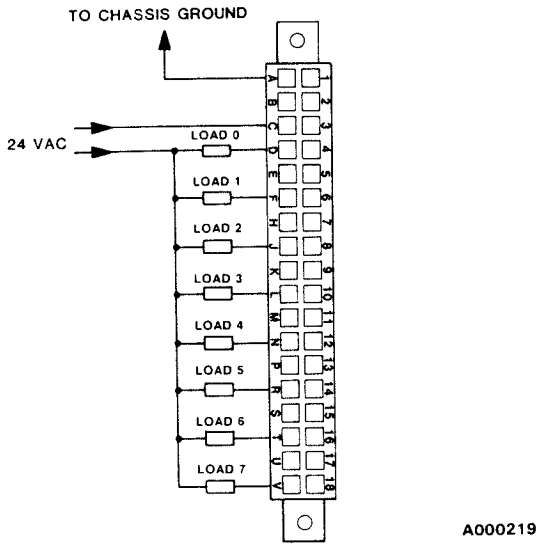

FIGURE 2. CARD EDGE CONNECTOR WIRING

The recommended external wiring convention is as follows: LOAD 0 through LOAD 7 and 24 volt ac should be No. 16 red wire; CHASSIS GROUND should be No. 16 green wire.

NOTE

The CHASSIS GROUND pin should be connected to the frame of the card rack as close as possible to this module.

2.2 FACEPLATE CONNECTOR

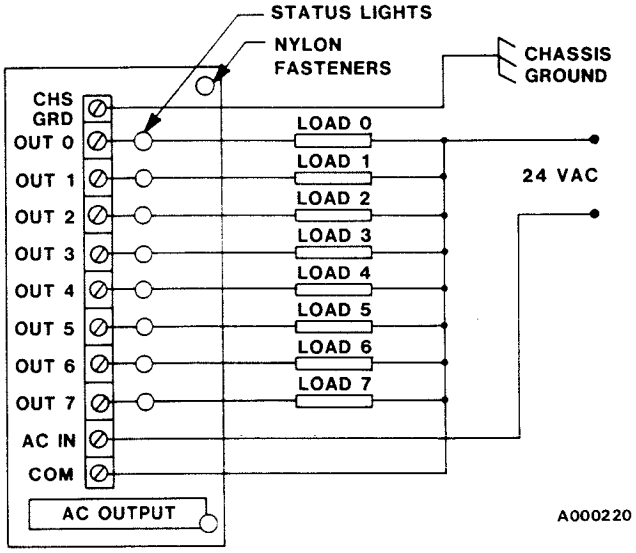

FIGURE 3. FACEPLATE WIRING

The Faceplate Connector allows 24 volt ac wiring connections to be conveniently made to compression screw terminals. LED indicators assist in troubleshooting by illuminating when the respective outputs are energized.

3.0 ADDRESSING

Each 8 AC Output Module occupies eight memory locations. The five board-mounted Address Switches must be set for the lowest of the eight addresses desired. When the state of address lines A3 through A7 match the Address Switch settings, the module is selected. A CLOSED Address Switch (handle in the ON position) requires the corresponding address line to be LOW for selection. An OPEN Address Switch (OFF position) requires the address line to be HIGH.

TABLE 1 contains the Address Switch settings for the 32 possible beginning address points.

TABLE 1. ADDRESS SWITCH SETTINGS

PC ADDRESS	SWITCHES 12345	PC ADDRESS	SWITCHES 12345
x000	ON OFF	x128	ON OFF
x008	ON OFF	x136	ON OFF
x016	ON OFF	x144	ON OFF
x024	ON OFF	x152	ON OFF
x032	ON OFF	x160	ON OFF
x040	ON OFF	x168	ON OFF
x048	ON OFF	x176	ON OFF
x056	ON OFF	x184	ON OFF
x064	ON OFF	x192	ON OFF
x072	ON OFF	x200	ON OFF
x080	ON OFF	x208	ON OFF
x088	ON OFF	x216	ON OFF
x096	ON OFF	x224	ON OFF
x104	ON OFF	x232	ON OFF
x112	ON OFF	x240	ON OFF
x120	ON OFF	x248	ON OFF

24 VOLT-8 AC OUTPUT MODULE

The PC ADDRESS column may be utilized for coil number suffixes. The leading "x" represents a decimal number based on the rack in which the module is plugged. As seen in TABLE 2, "x" can be 2 through 9.

TABLE 2. RACK I/O ADDRESSES

RACK NAME	PC ADDRESSES	MAX. I/O PER RACK
MASTER RACK	2000 - 2239	240
1st EXTENSION	3000 - 3255	256
2nd EXTENSION	4000 - 4255	256
3rd EXTENSION	5000 - 5255	256
4th EXTENSION	6000 - 6255	256
5th EXTENSION	7000 - 7255	256
6th EXTENSION	8000 - 8255	256
7th EXTENSION	9000 - 9255	256

Rack address assignments are made in 256 address increments. A number on the Nest Receiver Board permits one rack to respond to all 256 addresses, or two racks to split the assignment into upper and lower 128 address increments.

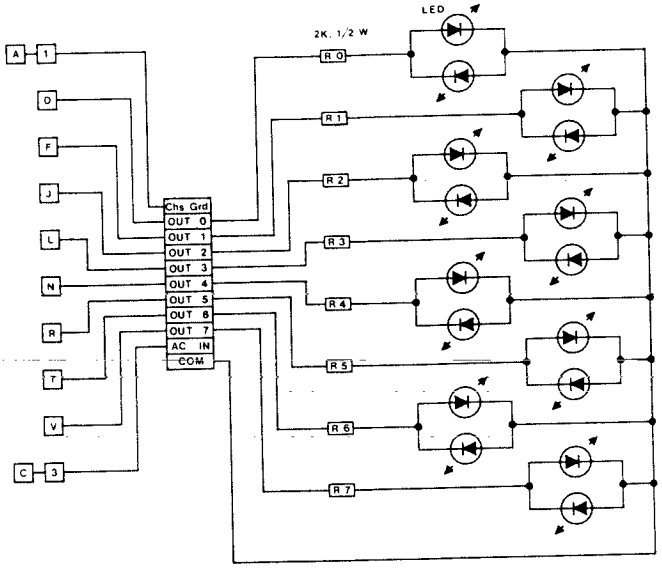

FIGURE 5. FACEPLATE SCHEMATIC

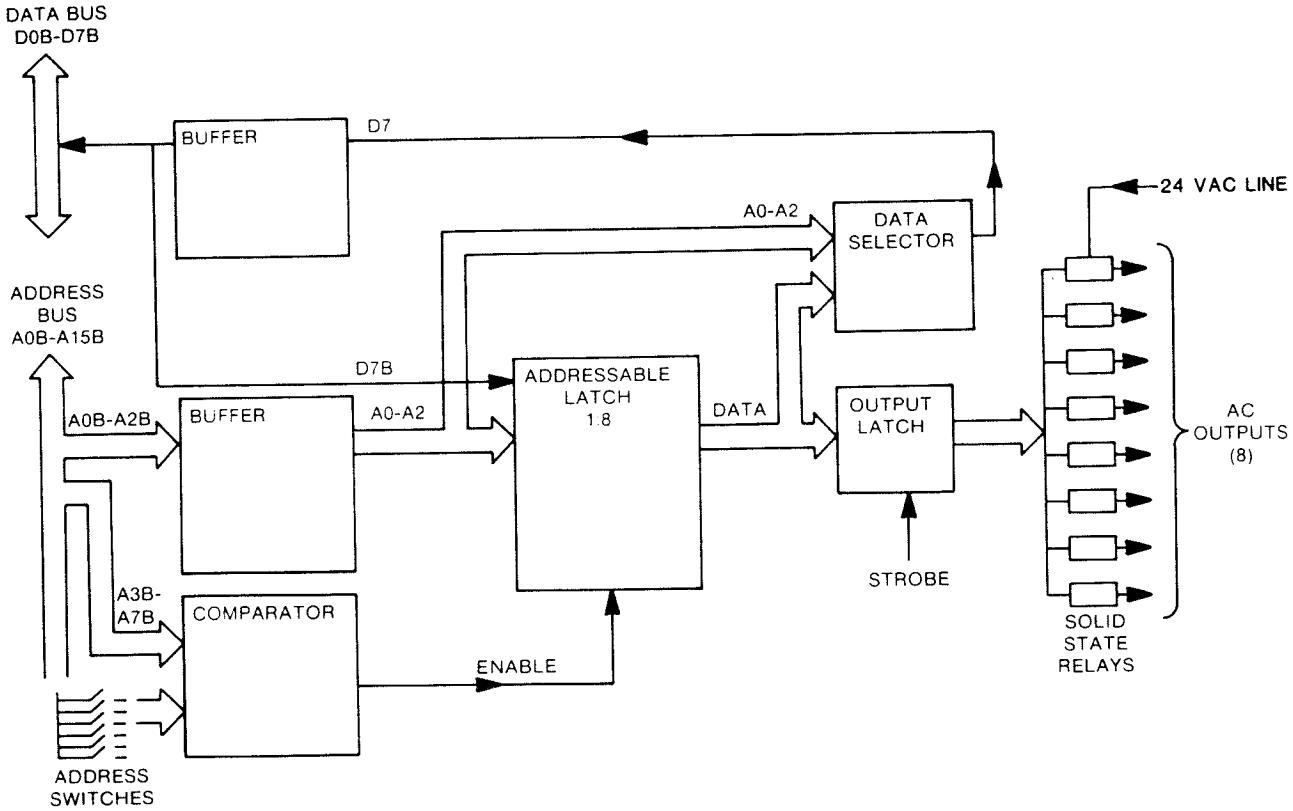

FIGURE 4. BLOCK DIAGRAM

A000218

24 VOLT-8 AC OUTPUT MODULE

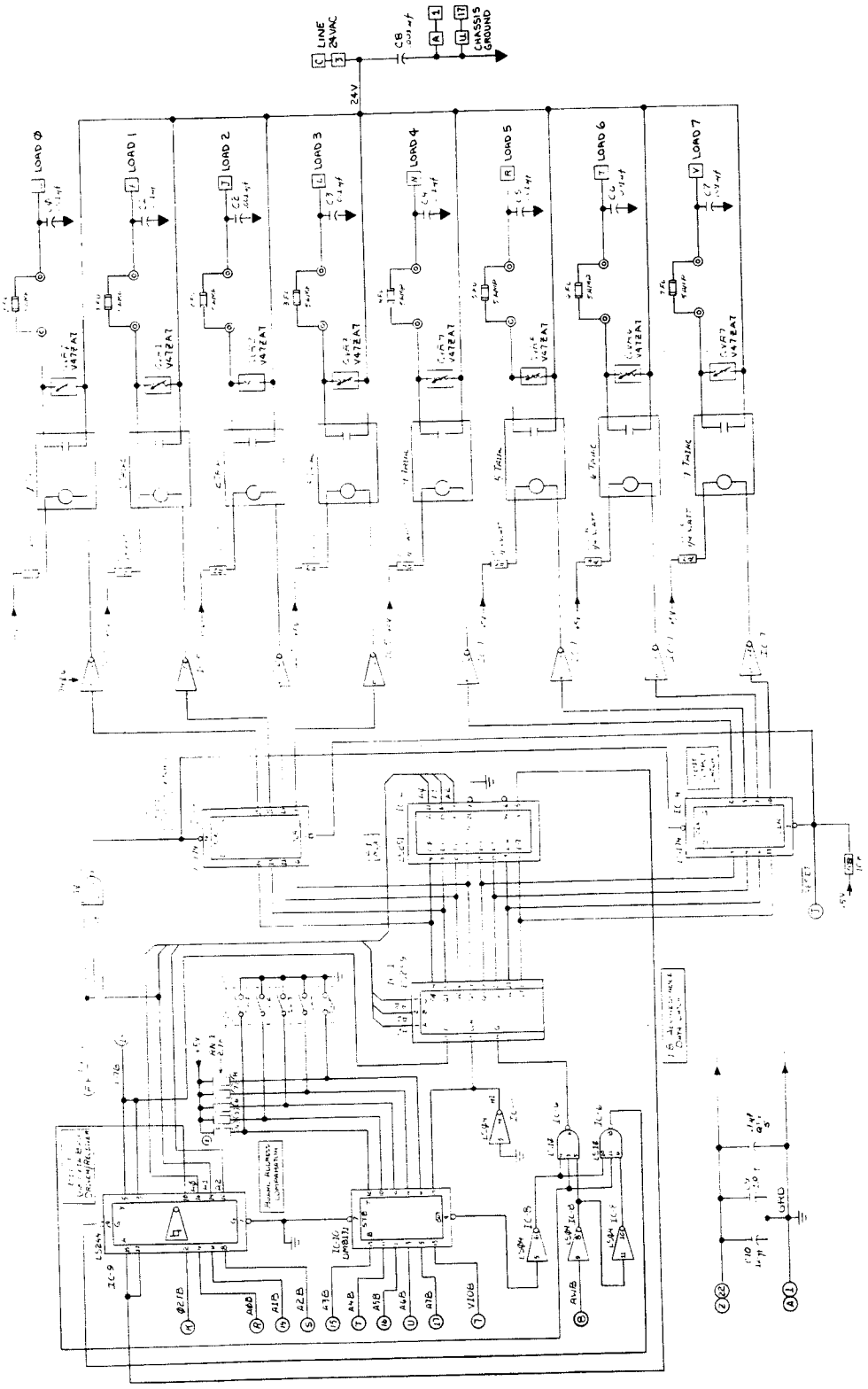

502-03173-00

FIGURE 6. MODULE SCHEMATIC

RS-232-C INTERFACE MODULE

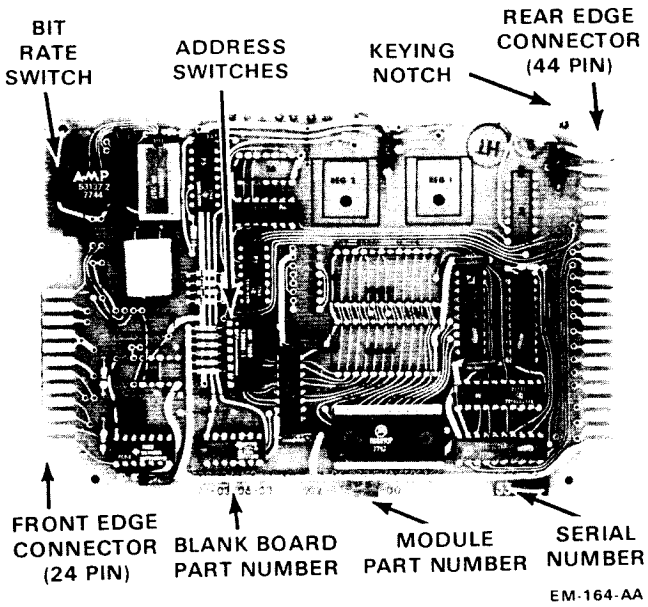

FIGURE 1. RS-232-C INTERFACE MODULE

1.0 INTRODUCTION

Each RS-232-C Interface Module, part 502-02833-20, allows the user to communicate with the system via a serial "terminal". The data rate is selectable from 50 to 19,200 bits per second in fourteen steps.

External devices are wired to the module through a 24-pin card edge connector.

The RS-232-C Interface Module must be located in the Master Rack.

2.0 ADDRESSING

Each RS-232-C Interface Module occupies four memory locations. The board-mounted Address Switches must be set for the lowest of the four addresses desired.

TABLE 1 contains the Address Switch settings for the 60 possible beginning address points.

NOTE

When using a printer or a GTEK EPROM programmer, the RS-232-C Interface Module address switch setting must be 2236.

3.0 BIT RATE SELECTION

3.1 ON-BOARD BIT RATE SWITCH

A sixteen-position, screwdriver-actuated switch is located near the front edge of the module for bit rate selection. See TABLE 2 for the various Bit Rate Switch positions and corresponding bit rates.

TABLE 1. ADDRESS SWITCH SETTINGS

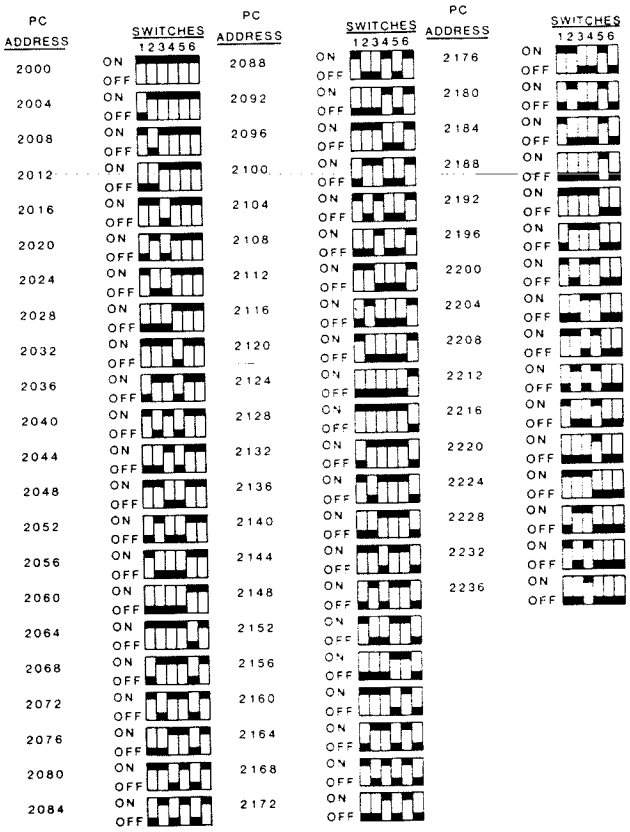

TABLE 2. BIT RATE vs SWITCH POSITION

BIT RATE	SWITCH POSITION
50	13
75	12
110	0
134.5	11
150	1
200	10
300	2
600	9
1200	4
1800	5
2400	3 OR 8
4800	6
9600	7
19200	14 OR 15

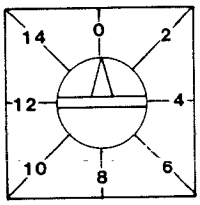

FRONT VIEW

3.2 EXTERNAL BIT RATE SWITCHES

An external switch may be connected to the module to remotely control the bit rate. If an external Bit Rate Switch is used, the board-mounted Bit Rate Switch must be set to position 0. A 24-pin card edge connector, part 401-50656-00, may be wired as shown in FIGURE 2.

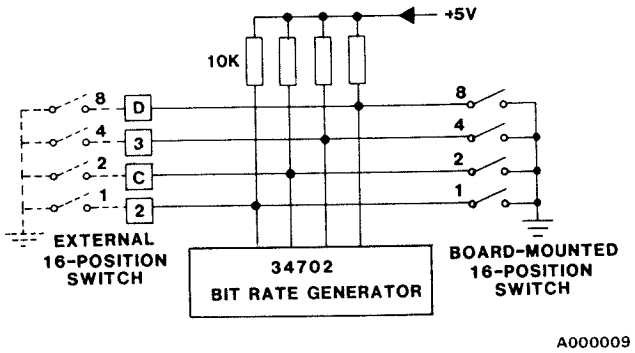

FIGURE 2. BIT RATE SWITCHES

3.3 RECEIVE BIT RATE CONNECTION

The RECEIVE bit rate is normally the same as the TRANSMIT bit rate. Therefore, a jumper is present between pins N and 12 on the card edge connector to supply the RECEIVE circuit with clocking pulses from the bit rate generator (see FIGURE 3). Some applications use a self-clocking cassette system, or other device, which supplies a separate receive bit rate clock. In this case, the jumper is deleted and the external clock source is connected to pin 12. The frequency of the external clock must be sixteen times the desired bit rate.

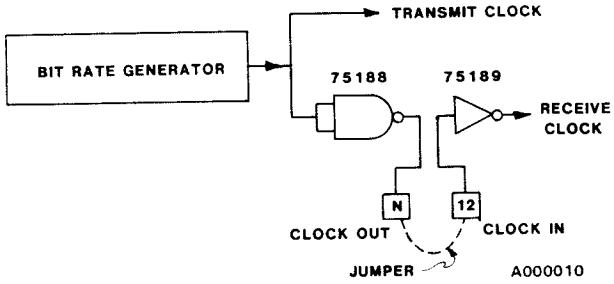

FIGURE 3. RECEIVE BIT RATE CONNECTION

4.0 TERMINAL CONNECTIONS

FIGURE 4 illustrates the circuitry and pin designations used for modem and terminal communications. Wiring is done via a 24-pin card edge connector, part 401-50656-00. Phosphor-bronze crimp contacts, with gold-over-nickel plating, are available as part 401-50460-00. "Dummy" contacts, part 401-50459-00, may be inserted into the connector at unused places for improved holding power.

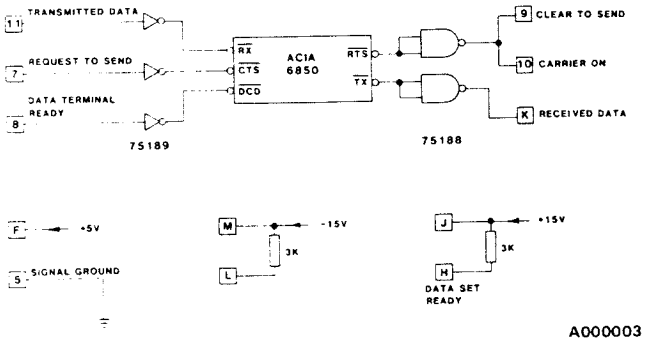

FIGURE 4. MODEM & TERMINAL CONNECTIONS

4.1 MODULE NOMENCLATURE

The nomenclature in FIGURE 4 shows the module as a modem or "data set". The communications device is designated as a "data terminal".

4.2 INTERCONNECTION CABLE

An interconnection cable typically has a 24-pin card edge connector at one end for the RS-232-C Interface Module, and a 25-pin "D" plug or socket for the terminal. See FIGURE 5 for card edge wiring. A "D" plug is available as part 401-50453-00. Pins are part 401-50451-00. A "D" socket is available as part 401-50454-00. Pins are part 401-50450-00.

The "D" connector is usually wired as follows: Pin 2, TRANSMIT DATA; Pin 3, RECEIVE DATA; Pin 7, GROUND; and Pin 20, DATA TERMINAL READY. Pins 2 and 3 may be reversed in some devices.

RS-232-C INTERFACE MODULE

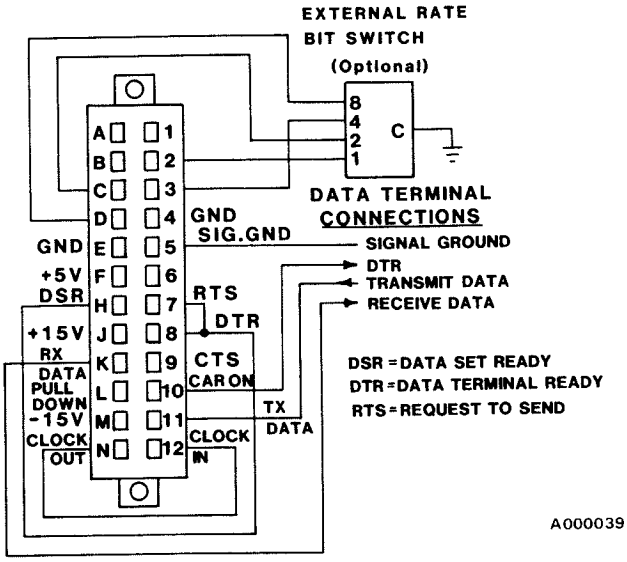

FIGURE 5. CARD EDGE CONNECTOR WIRING

5.0 INSTALLATION

IMPORTANT

ENSURE THAT POWER TO THE CARD RACK IS OFF BEFORE INSERTING OR REMOVING THIS OR ANY MICRO-COMPUTER MODULE. Failure to do so may result in permanent damage to the module.

RS-232-C Interface Modules must be installed in the Master Rack. The racks are physically keyed to prevent the module from being inserted incorrectly. Set the Address Switches per the instructions in Section 2.0. Make wire connections and fasten the card edge connector before applying power.

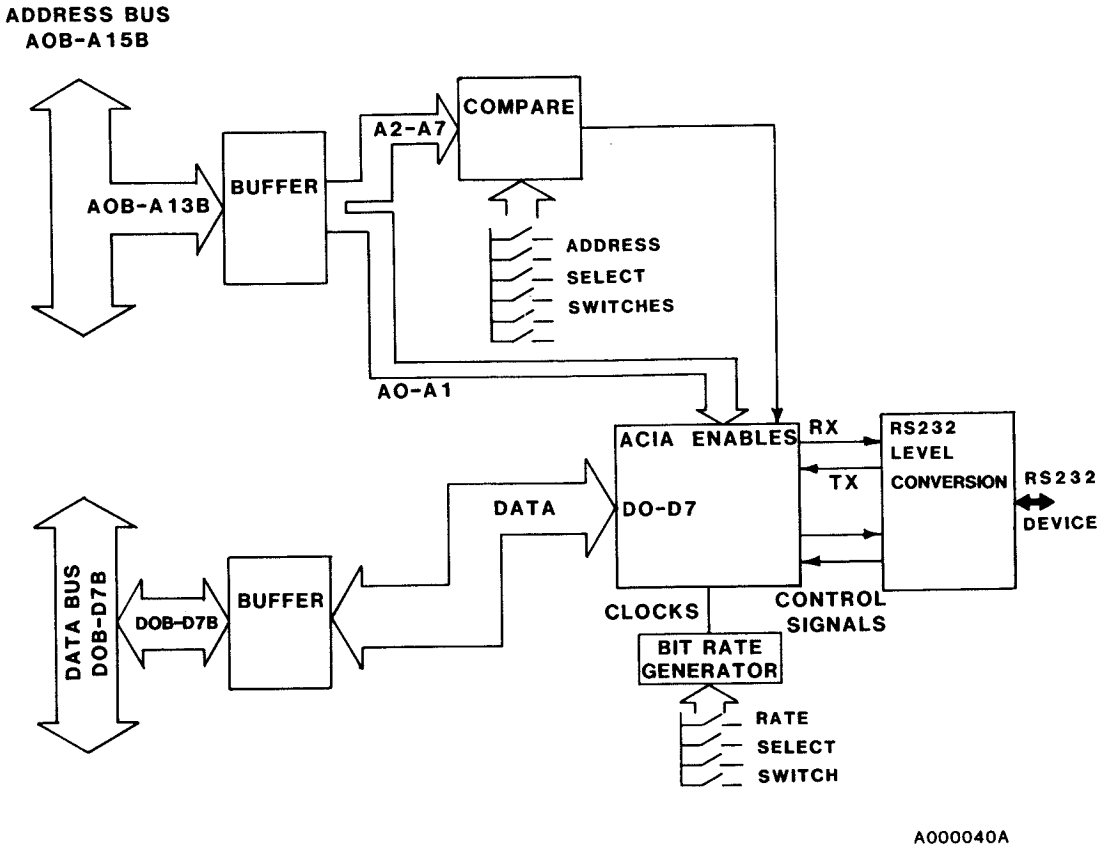

FIGURE 6. BLOCK DIAGRAM

A000040

RS-232-C INTERFACE MODULE

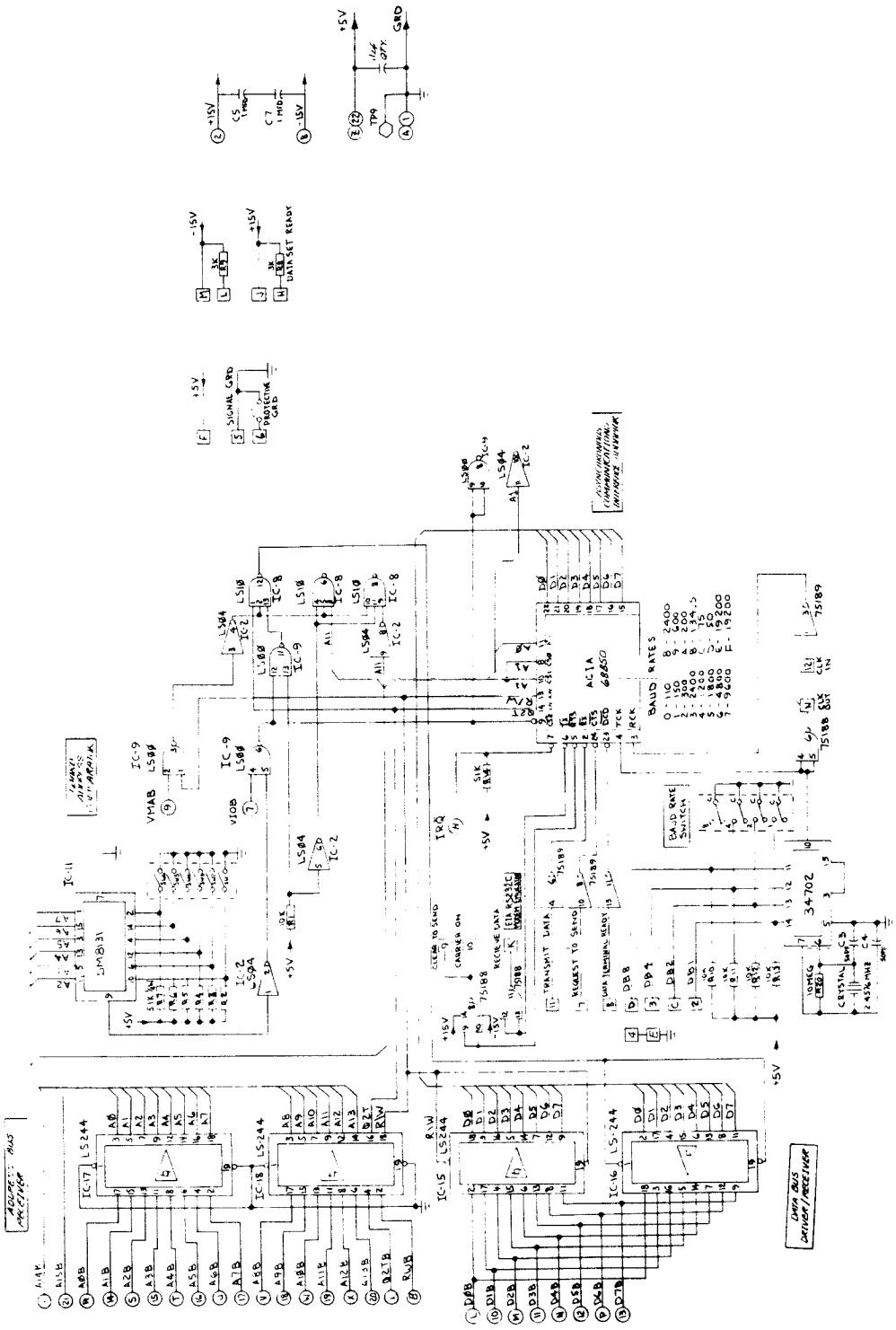

502-02833-20

FIGURE 7. SCHEMATIC

FIFO COMMUNICATIONS MODULE

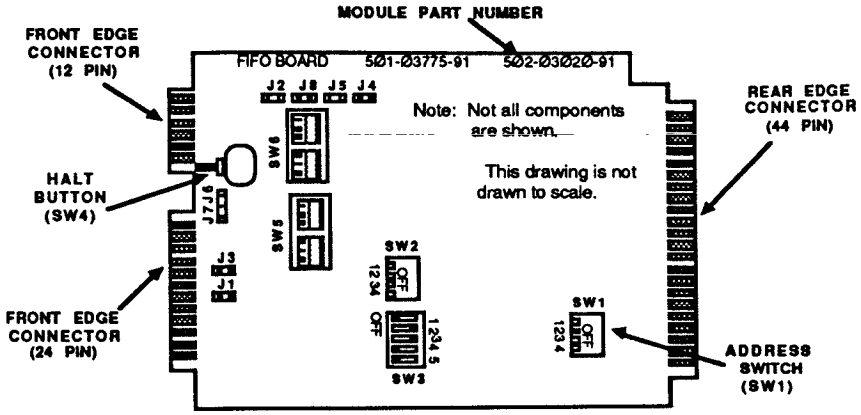

FIGURE 1. FIFO COMMUNICATIONS MODULE

1.0 INTRODUCTION

The First-In-First-Out (FIFO) Communications Module functions as an intelligent peripheral. The FIFO Module contains a 1K memory buffer. Data is exchanged between the CPU and the 1K buffer on an interrupt basis. Between interrupts, the module handles serial data transfers between the 1K buffer and the peripheral device.

The FIFO Module is used with remote I/O and communications.

2.0 HALT BUTTON

Momentarily depressing the HALT Button causes a non-maskable interrupt (NMI) to be generated. The NMI signal is used in conjunction with appropriate software as a troubleshooting aid.

3.0 MODULE-MOUNTED SWITCHES

3.1 SWITCHES SW2 & SW3

The application that the FIFO Communications Module is used in determines how Switches 2 and 3 should be set. Refer to the documentation for your application for instructions on setting Switches 2 and 3.

3.2 SWITCHES SW5 & SW6

Switches 5 and 6 enable or disable the module-mounted transformer (see Section 4.0). The switches are used as shown in Figure 2.

3.3 ADDRESS SWITCH (SW1)

Each FIFO Module occupies sixteen memory locations in the PiC. The Address Switch (SW1) must be set for the lowest of the sixteen addresses desired. Table 1 contains the Address Switch settings for the fifteen possible beginning address locations.

TABLE 1. ADDRESS SWITCH SETTINGS

PiC Address	Switches (1234)	PiC Address	Switches (1234)
2000	ON / OFF	2128	ON / OFF
2016	ON / OFF	2144	ON / OFF
2032	ON / OFF	2160	ON / OFF
2048	ON / OFF	2176	ON / OFF
2064	ON / OFF	2192	ON / OFF
2080	ON / OFF	2208	ON / OFF
2096	ON / OFF	2224	ON / OFF
2112	ON / OFF		

ON OFF ON OFF

4.0 MODULE-MOUNTED TRANSFORMER

The FIFO Communications Module contains a transformer that can be enabled or disabled by the user (see Figure 2). The transformer should be enabled if noise is a problem when communications are carried out, providing that the use of the transformer is possible with the application.

The following information must be observed when considering whether or not to use the module-mounted transformer:

1. The transformer cannot be used if communications are in the RS-232 format.
2. If a transformer is used at one end of the communications, a transformer must be used at the other end as well.

   This can be done by using two modules that contain a transformer, or by using a pulse module kit (which is a transformer) at the module that does not have a transformer mounted on it.
3. G&L supports using 76.8K baud, biphase communications.
4. Pin 5 on the 44-pin FIFO Module connector must be connected to chassis ground if the transformer is used. Run a wire from pin 5 to a screw that is in one of the threaded holes in the PiC rack.

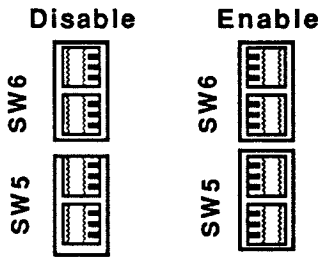

FIGURE 2. TRANSFORMER SWITCH SETTINGS

5.0 MODULE-MOUNTED JUMPERS

The FIFO Module contains eight jumpers that are set according to the application the Module is being used in. These jumpers should be correctly set when the module arrives from the G&L factory. Refer to the documentation for your application for instructions on setting the module-mounted jumpers.

Jumper 8 (J8) should be installed on the FIFO Module if RS 232 communications are being performed.

6.0 MODULE INSTALLATION

IMPORTANT

ENSURE THAT POWER TO THE PIC IS REMOVED BEFORE INSERTING OR REMOVING THIS OR ANY MICRO-COMPUTER MODULE. Failure to do so may result in permanent damage to the module.

7.0 CARD EDGE CONNECTOR

The rack is physically keyed to prevent modules from being inserted incorrectly. Make wiring connections to and fasten the card edge connector before applying power to the PiC.

A 44-pin (0.156-inch centers) card edge connector is used to make wiring connections to the FIFO Module from external devices. Figure 3 depicts proper interfacing to the card edge connector.

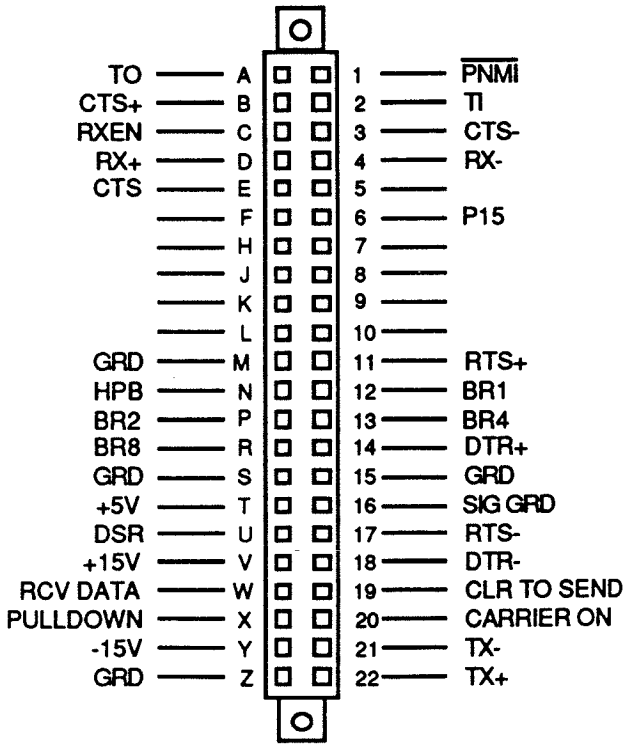

NOTE: Pin 5 must be connected to chassis ground if the module-mounted transformer is used.

FIGURE 3. CARD EDGE CONNECTOR WIRING

FIFO COMMUNICATIONS MODULE

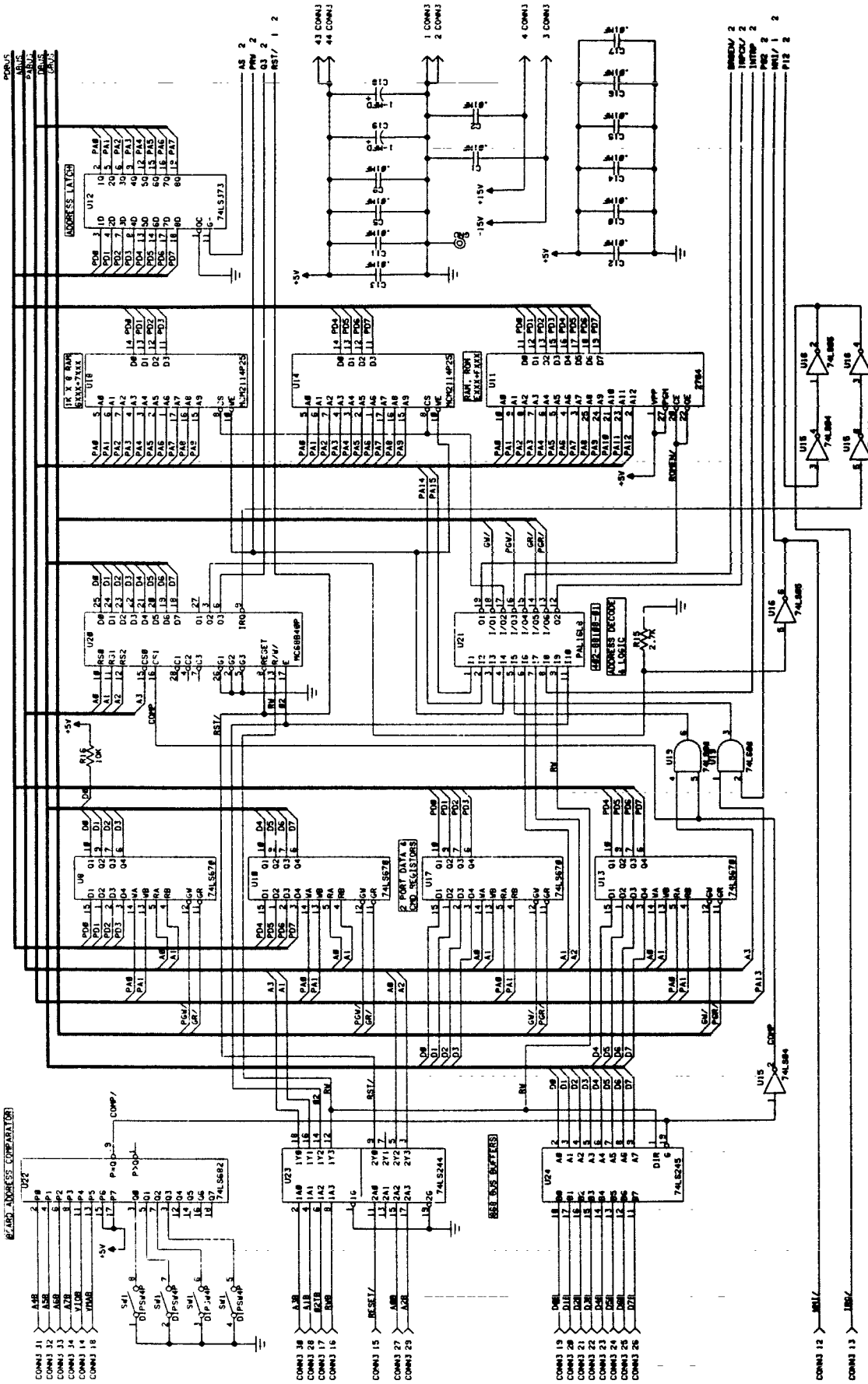

FIGURE 3.A. FIFO MODULE SCHEMATIC (PAGE 1 OF 2)

FIFO COMMUNICATIONS MODULE

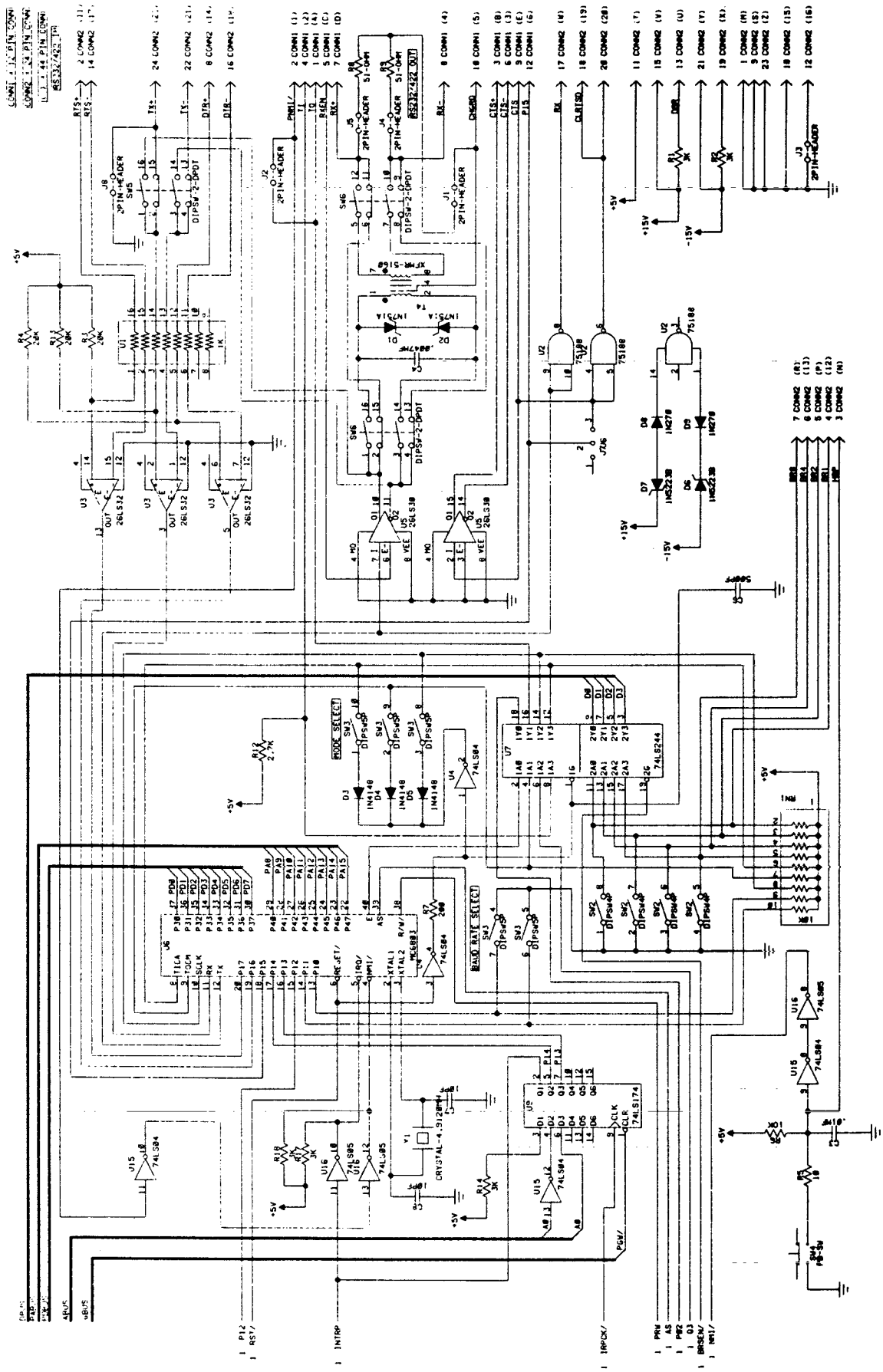

FIGURE 3.B. FIFO MODULE SCHEMATIC (PAGE 2 OF 2)

PERIPHERAL MICROCONTROLLER MODULE

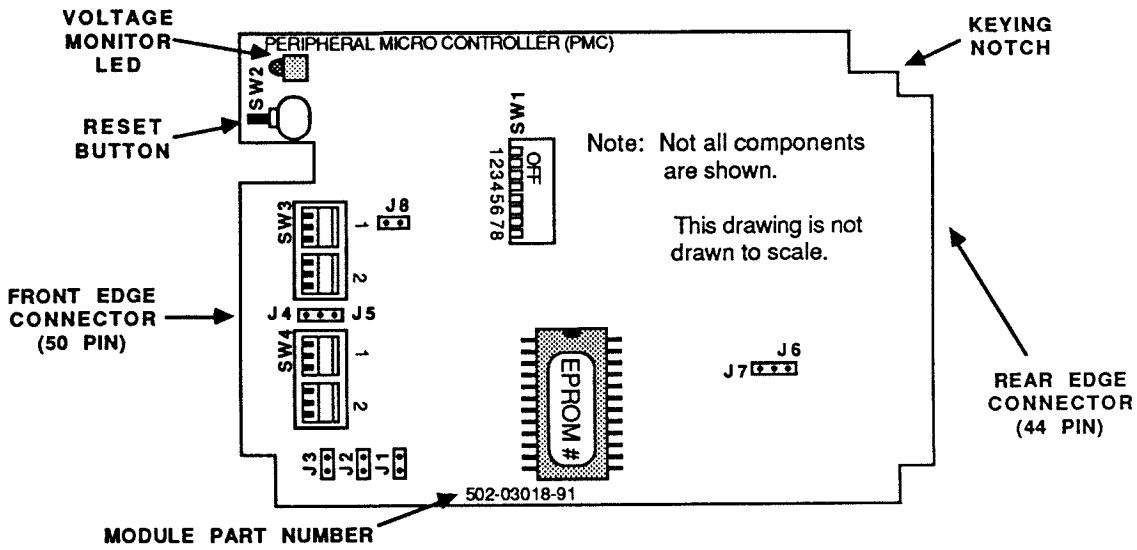

FIGURE 1. PERIPHERAL MICROCONTROLLER MODULE

1.0 INTRODUCTION

The Peripheral Microcontroller (PMC) Module functions as an independet computer. The PMC Module incorporates a CPU, up to 8K bytes of EPROM, 1.1K bytes of RAM, a Serial Communications Interface, parallel I/O, and a 16-bit timer. The PMC Module uses a 6801 microcomputer unit that is object code compatible with the 6800 and has several additional instructions.

2.0 VOLTAGE MONITOR

A voltage monitor is provided on the PMC Module to generate a RESET signal when the +5 volt supply falls below tolerance. The on-board LED illuminates when this happens and remains illuminated as long as the RESET signal persists.

3.0 MODULE-MOUNTED SWITCHES

3.1 SWITCH 1 (SW1)

Switch 1 (SW1) is a switch package consisting of eight individual switches (see Figure 1). Switches 1-3 are used to select remote stations and are connected to a port on the microcomputer. Switches 4 and 5 are used to select the baud rate. Switches 6, 7, and 8 are used to select the operating mode (memory and I/O usage) of the microcomputer IC on the PMC Module. Refer to the documentation for the Call Routine that the PMC Module is being used with for information regarding Switch 1 switch settings.

3.2 RESET BUTTON (SW2)

Momentarily depressing the RESET Button causes the CPU to initiate a restart sequence. Since the CPU is typically operated in Mode 2, the starting address of the program to be executed is fetched from the on-board EPROM.

3.3 SWITCHES 3 AND 4 (SW3 & SW4)

Switches 3 and 4 enable or disable the module-mounted transformer (see Section 4.0). The switches are used as shown in Figure 2.

4.0 MODULE-MOUNTED TRANSFORMER

The PMC Module contains a transformer that can be enabled or disabled by the user (see Figure 2). The transformer should be enabled if noise is a problem when communications are carried out, providing that the use of the transformer is possible with the application.

The following information must be observed when considering whether or not to use the module-mounted transformer:

1. The transformer cannot be used if communications are in the RS-232 format.
2. If a transformer is used at one end of the communications, a transformer must be used at the

other end as well.

This can be done by using two modules that contain a transformer, or by using a pulse module kit (which is a transformer) at the module that does not have a transformer mounted on it.

3. G&L supports using 76.8K baud, biphase communications.

4. Pin 15 on the 50-pin PMC Module card edge connector must be connected to chassis ground if the transformer is used. Run a wire from pin 15 to a screw that is in one of the threaded holes in the PiC rack.

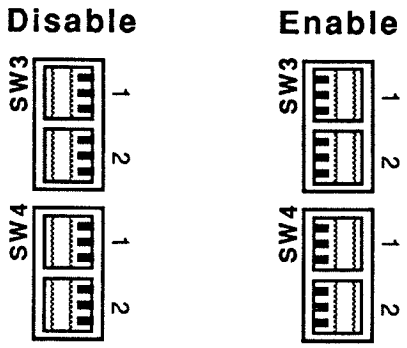

FIGURE 2. PMC TRANSFORMER SWITCH SETTINGS

5.0 MODULE-MOUNTED JUMPERS

5.1 JUMPERS 1-7

The PMC Module contains eight jumpers that are set according to the user's application. Jumpers 1-7 should be set as indicated in the documentation for the Call Routine used with the PMC Module.

The Bus Enable Jumper (J6) enables or disables the ICs that are used to drive an external bus (see Figure 3). When J6 is enabled, the PMC Module becomes a CPU, and it controls the other modules in the rack via address, data and control buses. When J6 is disabled, the PMC Module becomes a peripheral device and communicates only through the serial or parallel interfaces. The PMC Module will respond to externally generated RESET and interrupt signals.

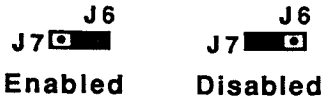

FIGURE 3. BUS ENABLE JUMPER SETTINGS

5.2 JUMPER 8

Jumper 8 (J8) should be installed on the PMC Module if RS-232 communications are being performed.

6.0 CARD EDGE CONNECTOR

A 50-pin card edge connector is used to make wiring connections to the PMC Module from external devices. Figure 4 shows wiring connections to the PMC card edge connector.

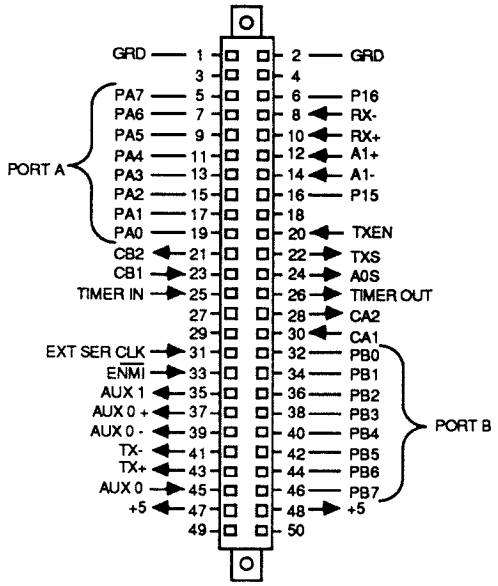

NOTE: Be sure the numbers on the card edge connector match the numbers on the PMC Module card edge.

FIGURE 4. CARD EDGE CONNECTOR WIRING

7.0 INSTALLATION

IMPORTANT

ENSURE THAT POWER TO THE PIC IS REMOVED BEFORE INSERTING OR REMOVING THIS OR ANY MICRO-COMPUTER MODULE. Failure to do so may result in permanent damage to the module.

The rack is physically keyed to prevent modules from being inserted incorrectly.

Make wiring connections to the card edge connector and fasten the card edge connector to the module before applying power to the PiC.

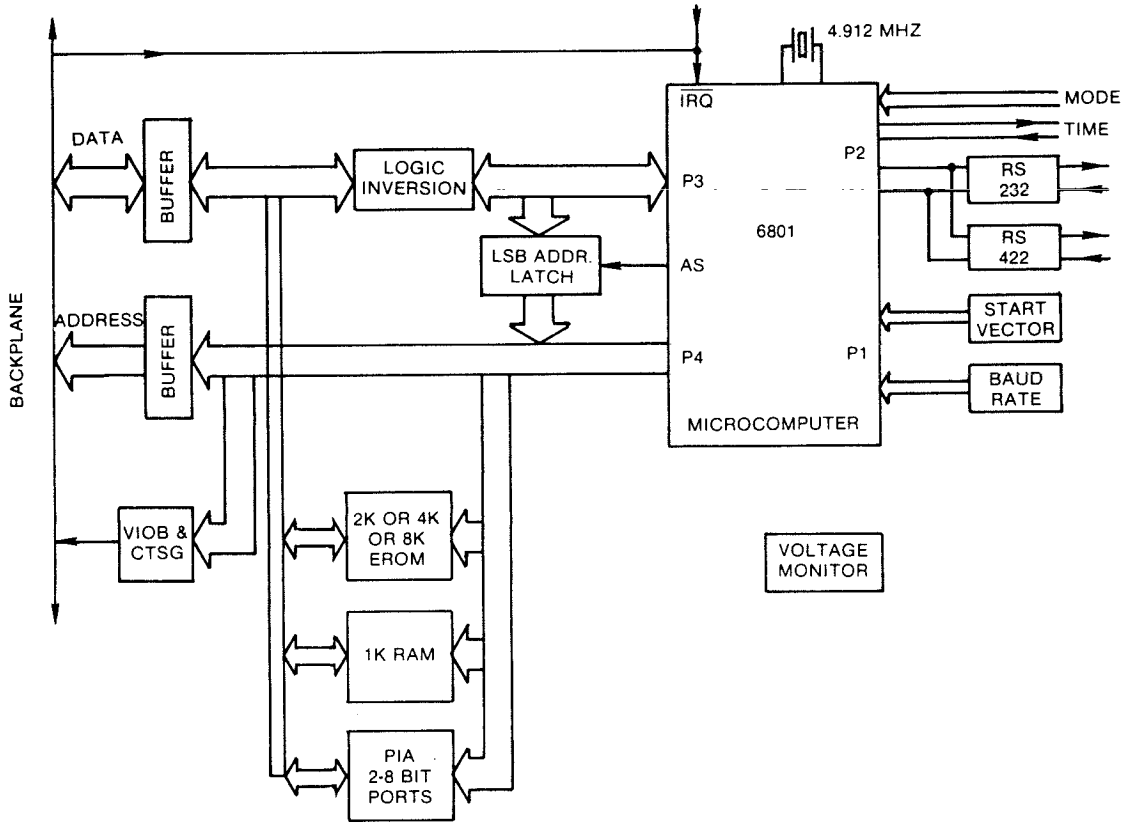

FIGURE 5. BLOCK DIAGRAM

PERIPHERAL MICROCONTROLLER MODULE

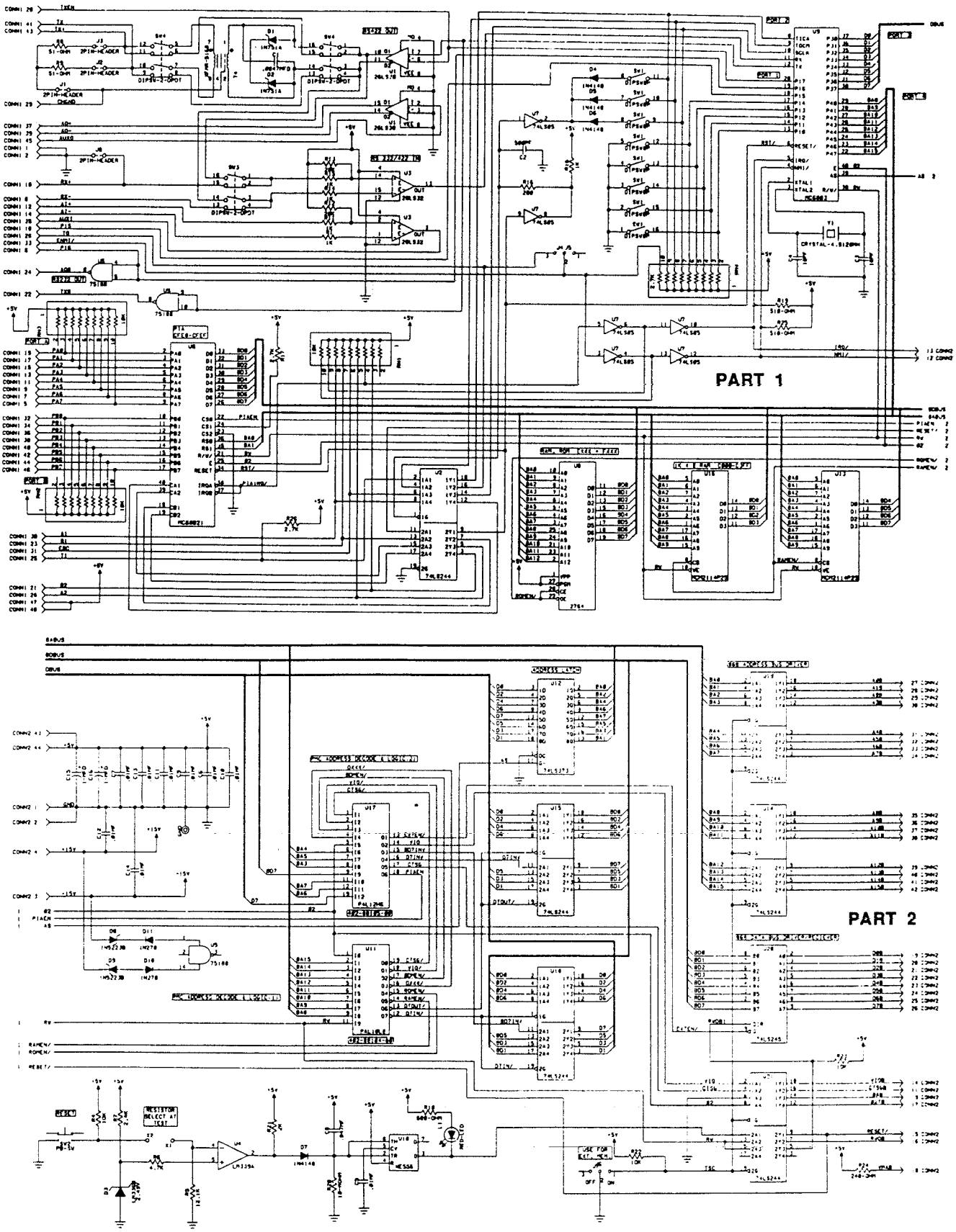

FIGURE 6. SCHEMATIC

20 mA/RS-422 CONVERTER MODULE

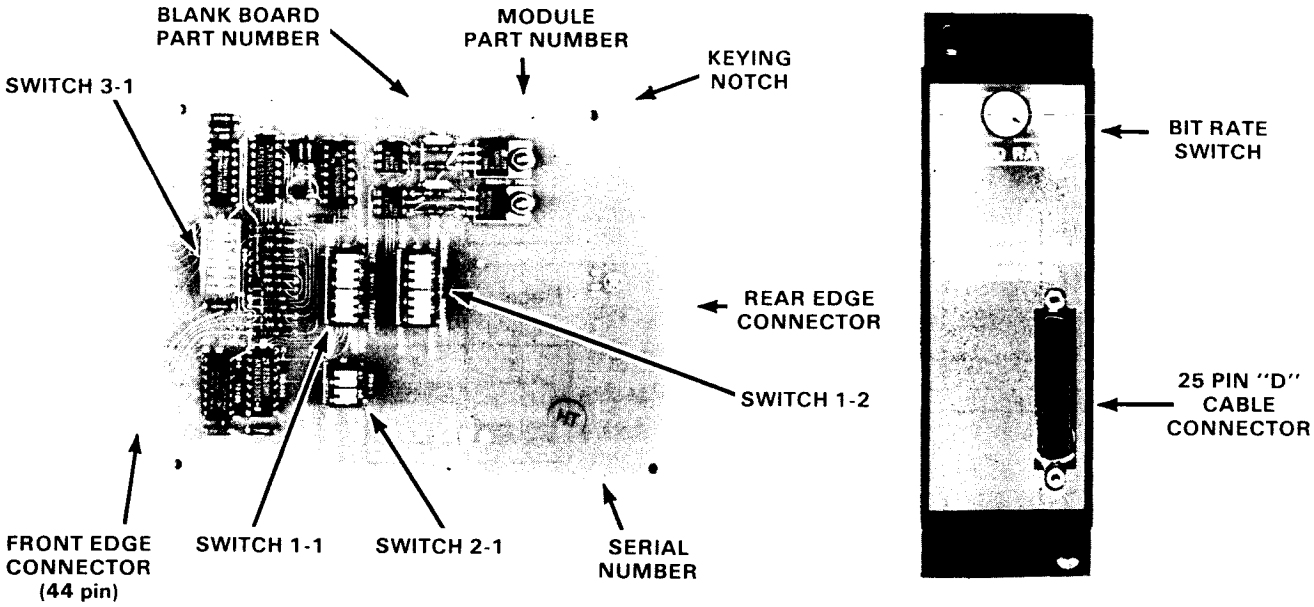

FIGURE 1. 20 mA/RS-422 CONVERTER MODULE & OPTIONAL SERIAL COMMUNICATIONS FACEPLATE

1.0 INTRODUCTION

The 20mA/422 Converter Module, part no. 502-03253-00, allows the user to convert RS-232-C type serial communications data to either 20mA current loop or RS-422 type serial communications data and vise versa. This allows the user to locate a data terminal or other device at greater distances from the PC409 than RS-232-C allows and still transmit and receive accurate serial data.

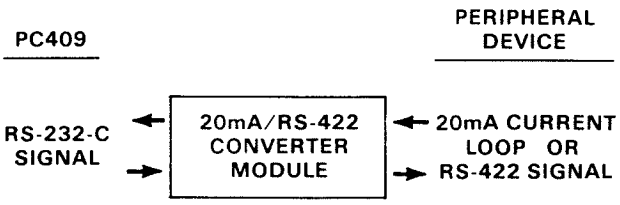

FIGURE 2. BLOCK DIAGRAM

This module will be configured in conjunction with one of the following three PC409 modules:

1) 502-02871-20 Programmer's Console Interface Module
2) 502-02833-20 RS-232-C Interface Module
3) 503-15613-00 FIFO Communications Module (for PC to PC communications)

An optional faceplate, the Serial Communications Interface Faceplate part no. 502-03266-00, connects the Converter Module to any one of the three modules listed above. It allows the user to simply connect a correctly configured cable, with a 25-pin "D" connector, from a data terminal or other device to the PC409.

2.0 SWITCH CONFIGURATIONS

There are four user configured switches on the 20mA/422 Converter Module.

2.1 SWITCH 1-1 (SW1-1)

SW1-1 is a 16-pin dip switch with two movable switches. These two switches are used to configure the transmit and receive circuits of the 20mA/422 Con-

verter Module for either the 20mA current loop or RS-422 mode.

Switch configurations for SW1-1 are shown in Figure 3.

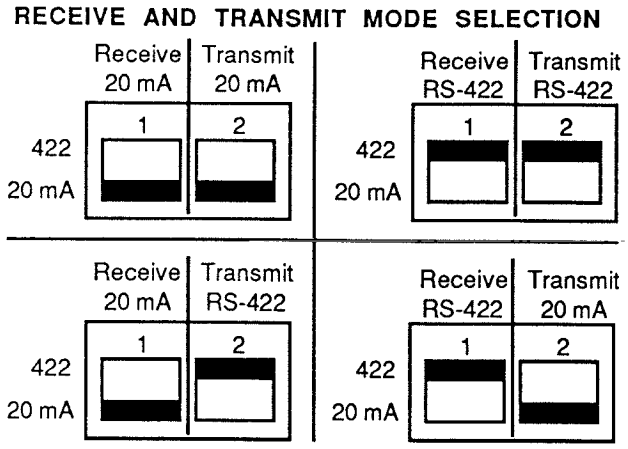

FIGURE 3. SWITCH 1-1

2.2 SWITCH 1-2 (SW1-2)

SW1-2 is a 16-pin dip switch with two movable switches. These two switches are used to configure the transmit and receive circuits of the module for either an "active" or "passive" current loop mode of operation.

In the active current loop mode, current is supplied by the 20mA/422 Converter Module. In the passive current loop mode, current is supplied by the user's data terminal or device.

Switch configurations for SW1-2 are shown in Figure 4.

2.3 SWITCH 2-1 (SW2-1)

SW2-1 is an 8-pin dip switch with two movable switches. These two switches are used to configure the module for one of the following four modes:

1) RS-422 Normal Mode - This mode is used when connecting a single RS-422 device to the 20mA/422 Converter Module.

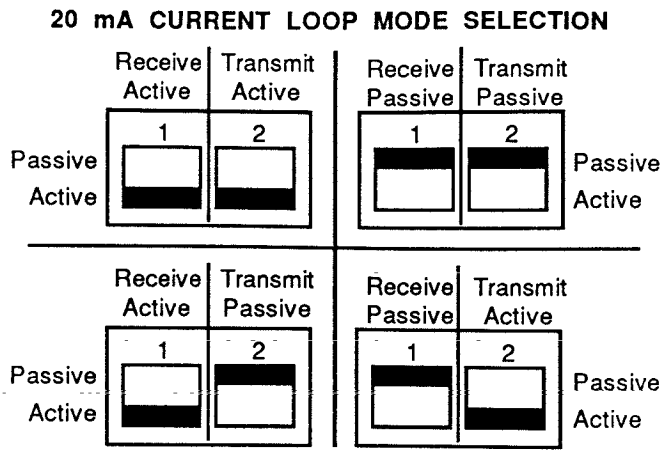

FIGURE 4. SWITCH 1-2

2) RS-422 Party Line Mode - This mode is used when wiring multiple RS-422 devices or terminals in parallel to the 20mA/422 Converter Module.

3) 20mA Normal Mode - This mode is used when connecting a single 20mA device to the 20mA/422 Converter Module.

4) 20mA Daisy Mode - This mode is used when wiring multiple 20mA current loop devices or terminals to the 20mA/422 Converter Module in series.

Switch configurations for SW2-1 are shown in Figure 5.

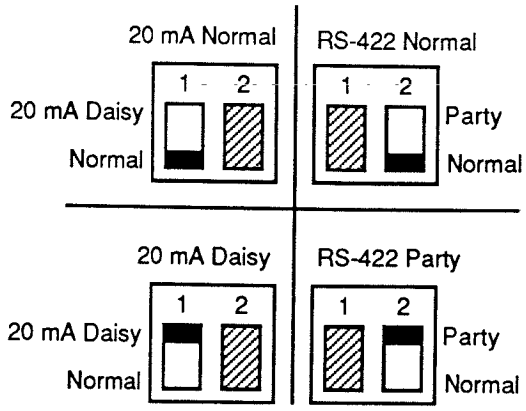

FIGURE 5. SWITCH 2-1

2.4 SWITCH 3-1 (SW3-1)

SW3-1 is a multi-purpose 16-pin dip switch. Definitions for each of the six (of the eight) switches used follows:

Switches 1,2,3 and 4 are used for RS-422 party line terminations. These switches should be closed (in circuit) on those modules used at each end of the party line. If the module is not used at the end of the party line, the switches should be open (out of circuit). The functions of the individual switches are defined below.

Switch 1 - 120 ohms between RTS+ and RTS-
Switch 2 - 120 ohms between DTR+ and DTR-
Switch 3, Switch 4 - (see NOTE)

NOTE

When operating the 20mA/RS-422 Converter Module in the 20mA mode, close switches 4 and 5 on SW3-1.

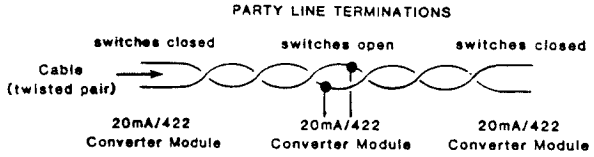

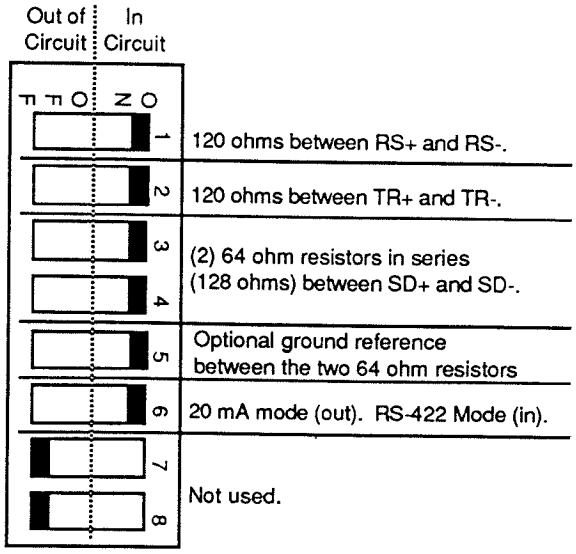

FIGURE 6. SWITCH 3-1

Switch 5 may be used in addition to switches 3 & 4 as a ground reference between the two 64 ohm resistors. With switch 5 closed, noise immunity may improve.

Switch 6 is used to configure the 20mA/422 Converter Module for either the 20mA Current Loop or the RS-422 modes. It is configured as follows:

OUT OF CIRCUIT - 20mA Current Loop mode
IN CIRCUIT - RS-422 mode

Switch configurations for SW3-1 are shown in Figure 6.

3.0 BIT RATE SELECTION

3.1 ON-BOARD BIT RATE SWITCH

BIT RATE	SWITCH POSITION
50	13
75	12
110	0
134.5	11
150	1
200	10
300	3
600	9
1200	4
1800	5
2400	3 or 8
4800	6
9600	7
19200	14 or 15

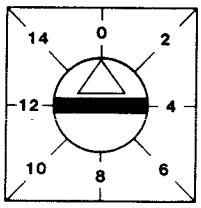

FRONT VIEW

FIGURE 7. BIT RATE vs SWITCH POSITION

Bit rate selection for the Programmer's Console Interface module and the RS-232-C Interface module is accomplished using the 16 position, screwdriver actuated switches located near the front edges of these modules. See Figure 7 for the various bit rate switch positions and corresponding bit rates.

3.2 EXTERNAL BIT RATE SWITCH

An external bit rate switch may be connected to the Programmer's Console Interface module and the RS-232-C

Interface module to remotely control the bit rate. If an external bit rate switch is used, as when using the Serial Communications Interface faceplate, the on-board bit rate switch must be set to position 0. A 24-pin card edge connector, part no. 401-50656-00, may be used to wire the external bit rate switch as shown in Figure 8.

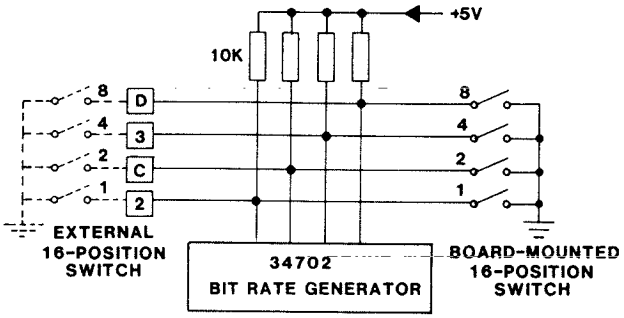

FIGURE 8. BIT RATE SWITCHES

3.3 FIFO BIT RATE SWITCH SELECTION

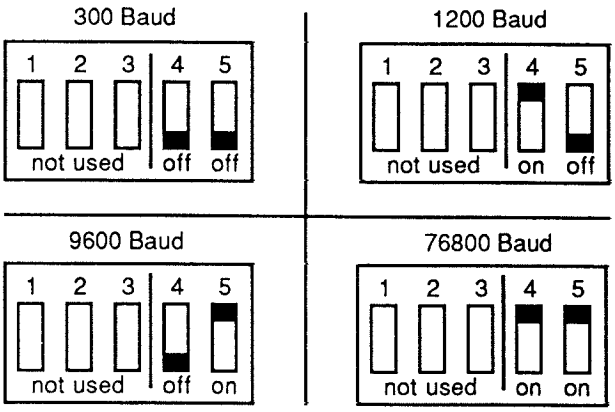

FIGURE 9. FIFO BIT RATE SELECTION

When using a FIFO Communications module in conjunction with the 20mA/422 Converter Module for PC to PC communications, the bit rate is selected by setting SW3-4 and SW3-5 on the FIFO Communications module. See Figure 9 for switch configuration and corresponding bit rates.

4.0 RS-232-C TO 20 mA CURRENT LOOP CONFIGURATIONS

The following modules may be used in conjunction with the 20mA/422 Converter Module to provide the user with a 20mA current loop configuration.

1) Programmer's Console Interface
2) RS-232-C Interface
3) FIFO Communications

IMPORTANT

When wiring external connections for a 20mA current loop configuration, do not reverse the + and - leads on the transmit and receive lines. This will result in damage to the 20mA/422 Converter Module.

4.1 CARD EDGE CONNECTOR

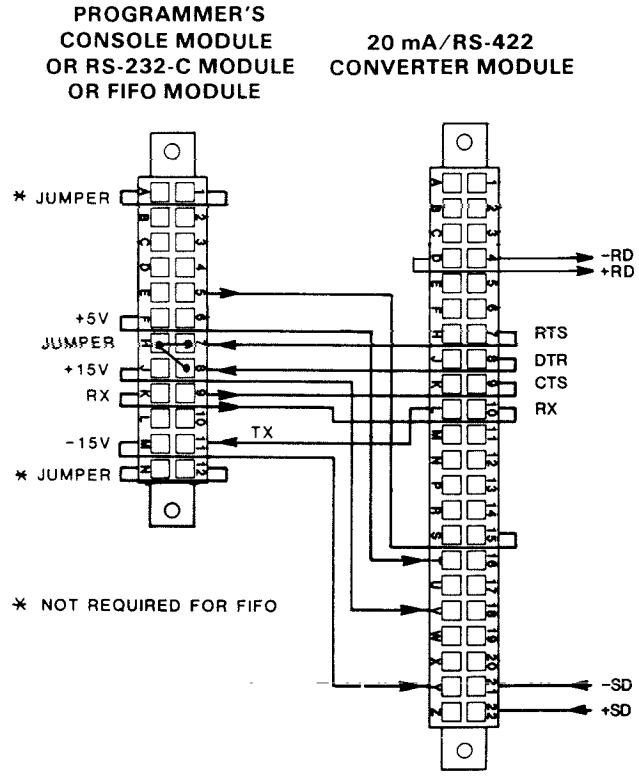

FIGURE 10. RS-232-C TO 20 mA CURRENT LOOP USING CARD EDGE CONNECTORS

A 24-pin card edge connector, part no. 401-50656-00, and a 44-pin card edge connector, part no. 401-50993-00, can be used to connect the 20mA/422 Converter Module to one of the PC409 modules discussed in the previous section. Phosphor bronze crimp contacts, with gold over nickel plating, are available as part no. 401-50460-00. "Dummy" contacts, part no. 401-50459-00, may be inserted in unused places for improved holding power.

Figure 10 illustrates the necessary connections when using card edge connectors for configuring the 20mA current loop option.

NOTE

If intending to use the external bit rate switch on the Serial Communications Interface faceplate, the following steps must be completed or the external switch will not be usable.

1) Set the rotary switch on the Programmer's Console Interface or the RS-232-C Interface to Position 0.
2) Place the BAUDRATE Jumper on the Serial Communications Interface faceplate to the "ENABLE" position.

4.2 OPTIONAL FACEPLATE CONNECTOR

If the optional Serial Communications Interface faceplate is used, the 20mA current loop option is configured as shown in Figure 11. When using the faceplate, the Converter Module must be in the Master Rack slot directly to the left of the module it will be connected to. The faceplate will then fit over the front edge connectors of both modules.

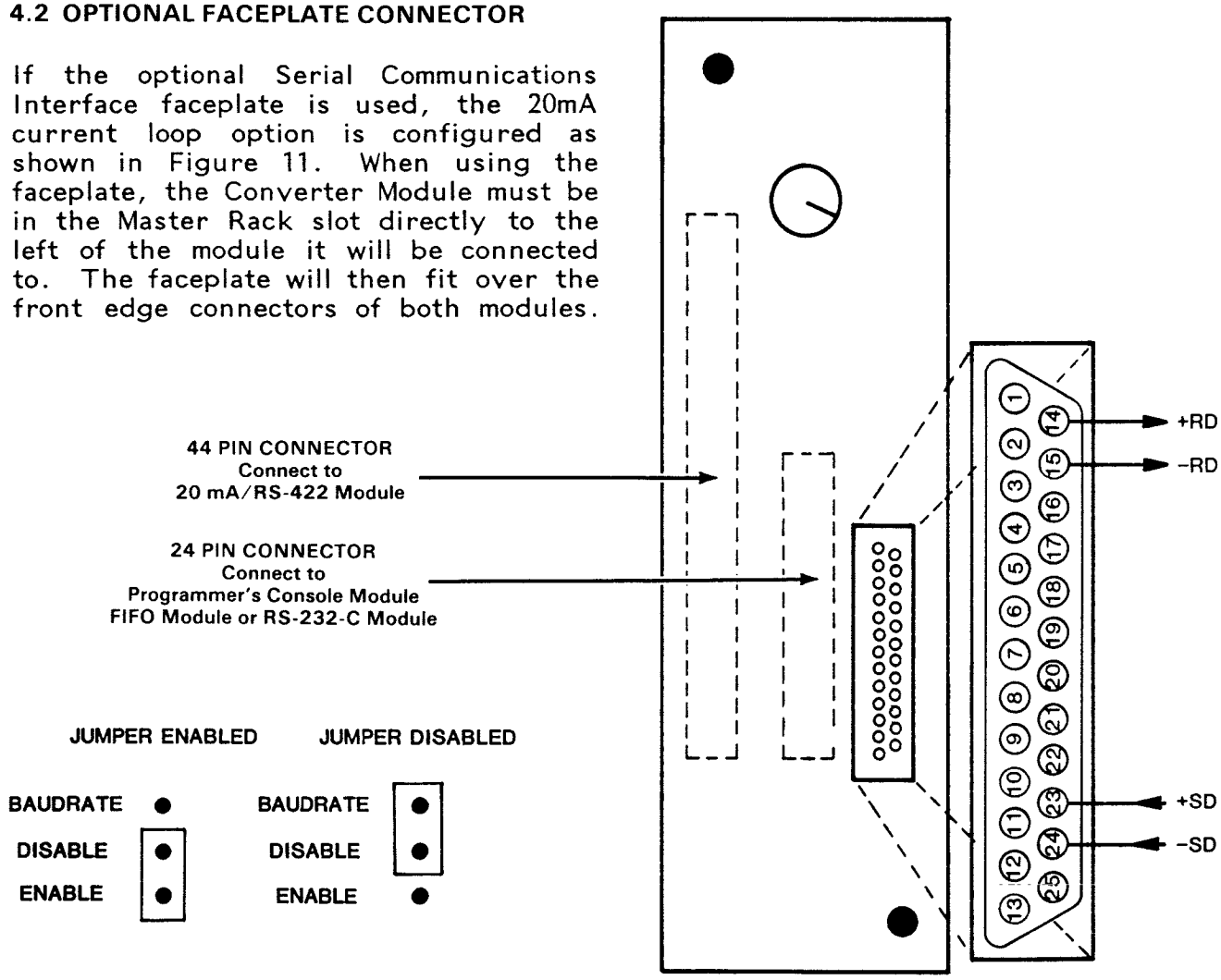

FIGURE 11. RS-232-C TO 20 mA CURRENT LOOP USING OPTIONAL FACEPLATE

5.0 RS-232-C TO RS-422 CONFIGURATIONS

The following modules may be used in conjunction with the 20mA/422 Converter Module to provide the user with an RS-422 configuration.

1) Programmer's Console Interface
2) RS-232-C Interface

NOTE

The FIFO Communications module is capable of RS-422 communications without the use of the 20mA/422 Converter Module.

5.1 CARD EDGE CONNECTOR

A 24-pin card edge connector, part no. 401-50656-00, and a 44-pin card edge connector, part no. 401-50993-00, can be used to connect the 20mA/422 Converter Module to one of the PC409 modules discussed in the previous section. Phosphor bronze crimp contacts, with gold over nickel plating, are available as part no. 401-50460-00. "Dummy" contacts, part no. 401-50459-00, may be inserted in unused places for improved holding power.

Figure 12 illustrates the necessary connections when using card edge connectors for configuring the RS-422 option.

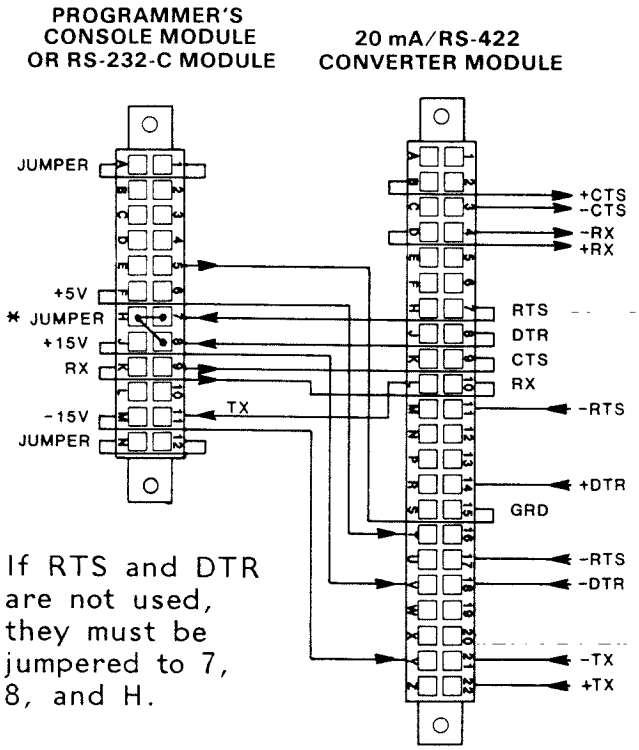

* If RTS and DTR are not used, they must be jumpered to 7, 8, and H.

FIGURE 12. RS-232-C TO RS-422 USING CARD EDGE CONNECTORS

5.2 OPTIONAL FACEPLATE CONNECTOR

If the optional Serial Communications Interface faceplate is used, the RS-422 option is configured as shown in Figure 13. When using the faceplate, the Converter Module must be in the Master Rack slot directly to the left of the module it will be connected to. The faceplate will then fit over the front edge connectors of both modules.

NOTE

If intending to use the external bit rate switch on the Serial Communications Interface faceplate, the following steps must be completed or the external switch will not be usable.

1) Set the rotary switch on the Programmer's Console Interface or the RS-232-C Interface to Position 0.

2) Place the BAUDRATE jumper on the Serial Communications Interface faceplate to the "ENABLE" position.

20mA/RS-422 CONVERTER MODULE

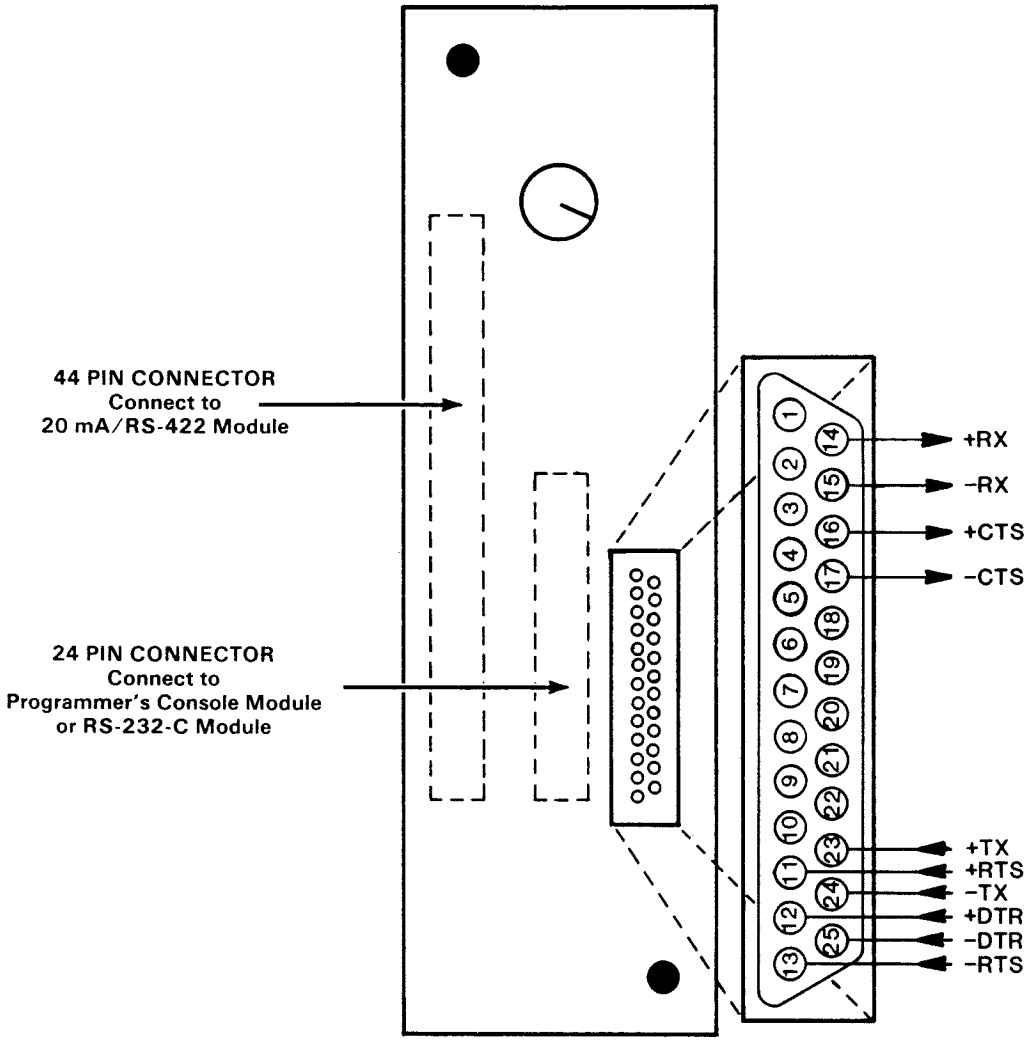

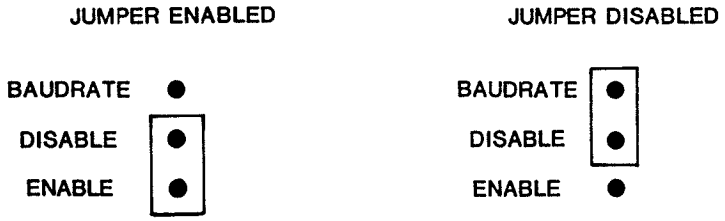

FIGURE 13. RS-232-C TO RS-422 USING OPTIONAL FACEPLATE

20mA/RS-422 CONVERTER MODULE

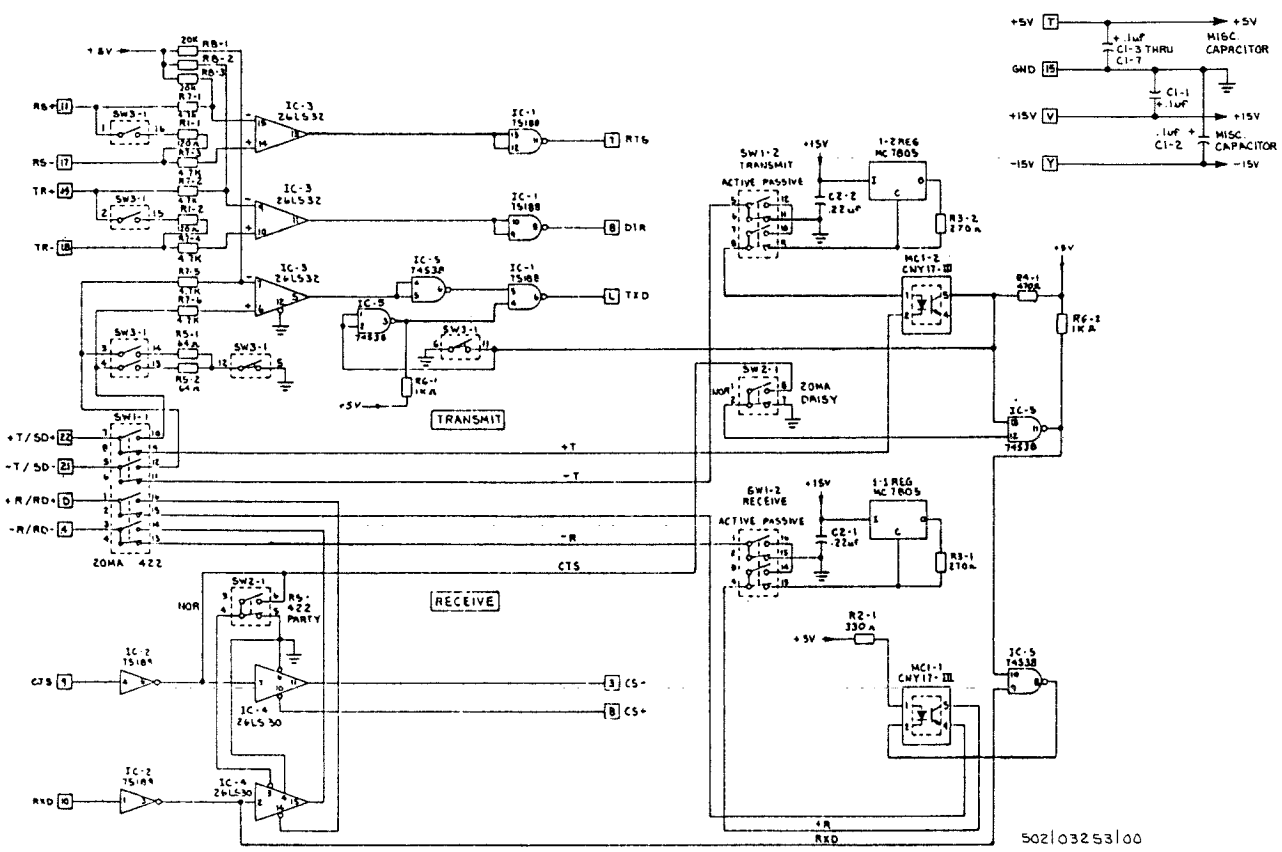

FIGURE 14. 20 mA/ RS-422 CONVERTER MODULE SCHEMATIC

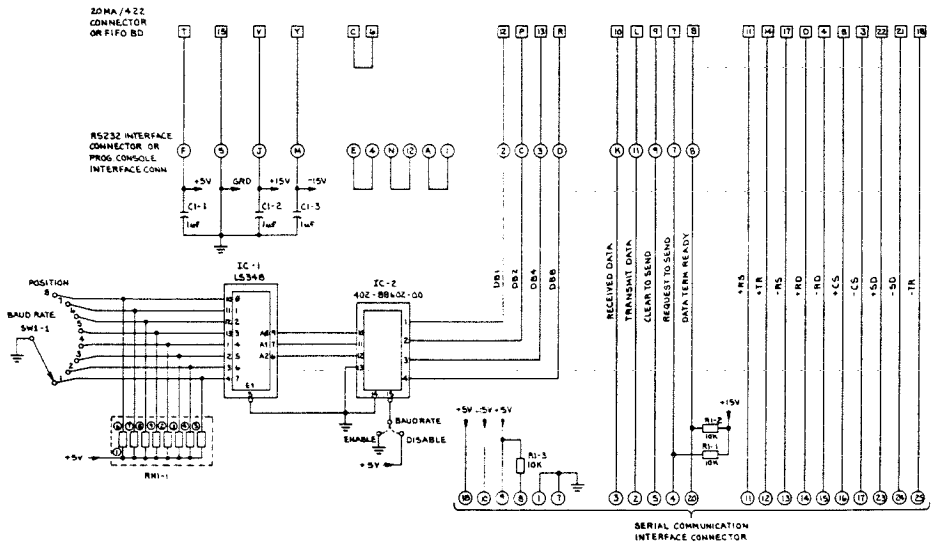

FIGURE 15. SERIAL COMMUNICATIONS INTERFACE FACEPLATE SCHEMATIC

SERIAL COMMUNICATIONS FACEPLATE

Part Number 502-03266-00

1.0 INTRODUCTION

The Serial Communications Faceplate, part no. 502-03266-00, provides a convenient interface between the G&L PiC communications modules and communications cables coming from peripheral devices. It has an on-board baud rate selector switch and a 25 pin female "D" cable connector.

This faceplate fits directly onto the front edge connectors of the following four modules:

RS-232C Interface Module
Part No. 502-02833-20.

Programmer's Console Module
Part No. 502-02871-00.

FIFO Communications Module
(for PiC to PiC communications)
Part No. 502-15613-00.

20 mA/RS-422 Converter Module
Part No. 502-03253-00

NOTE

Refer to the 20 mA/RS-422 Converter Module documentation when using the faceplate with that module.

2.0 BAUD RATE SELECTOR SWITCH

The baud rate on the RS-232C Interface Module and the Programmer's Console Module can be set by the selector switch on the front of the Serial Communications Faceplate. The baud rate on the FIFO module must be set by the internal switches on the module.

If the BAUD RATE switch is to be used, follow the next four steps.

1. Set the rotary switch on the Programmer's Console or the RS-232C module to position 0.

2. Place the BAUD RATE jumper on the back of the Serial Communications Faceplate to the ENABLE position.

3. Connect the 24 pin connector on the faceplate to the front edge connector of the module.

4. Set the BAUD RATE switch on the faceplate to the desired position.

If the BAUD RATE switch on the faceplate is not used, set the BAUD RATE jumper to the DISABLE position before connecting the faceplate to the front edge of the module.

IMPORTANT

ENSURE THAT POWER TO THE MASTER RACK IS OFF BEFORE INSERTING OR REMOVING OR ANY OTHER MICROCOMPUTER MODULE. Failure to do so may result in permanent damage to the module.

3.0 25 PIN "D" CONNECTOR

The connector on the front of the faceplate is a standard 25 pin female "D" connector typically used in serial communications. The purpose of each pin depends upon the function selected for the module connected to the faceplate.

Use pin configuration "B" if you are using a module for RS-232C communications. Use pin configuration "A" if you are using the FIFO module for RS-422 communications. Refer to the 20 mA/RS-422 Converter Module documentation when using that particular module for 20 mA or RS-422 communications.

SERIAL COMMUNICATIONS FACEPLATE

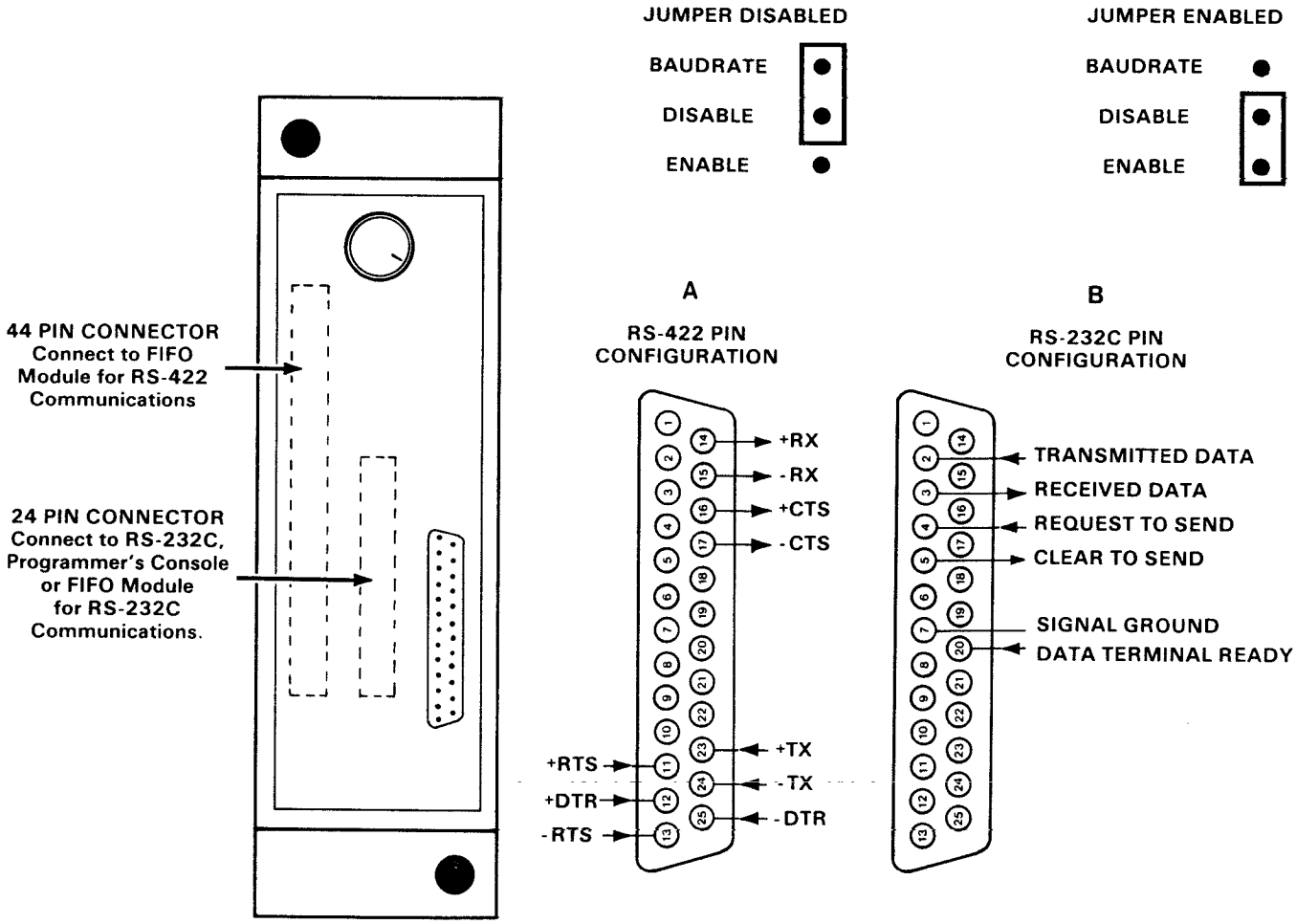

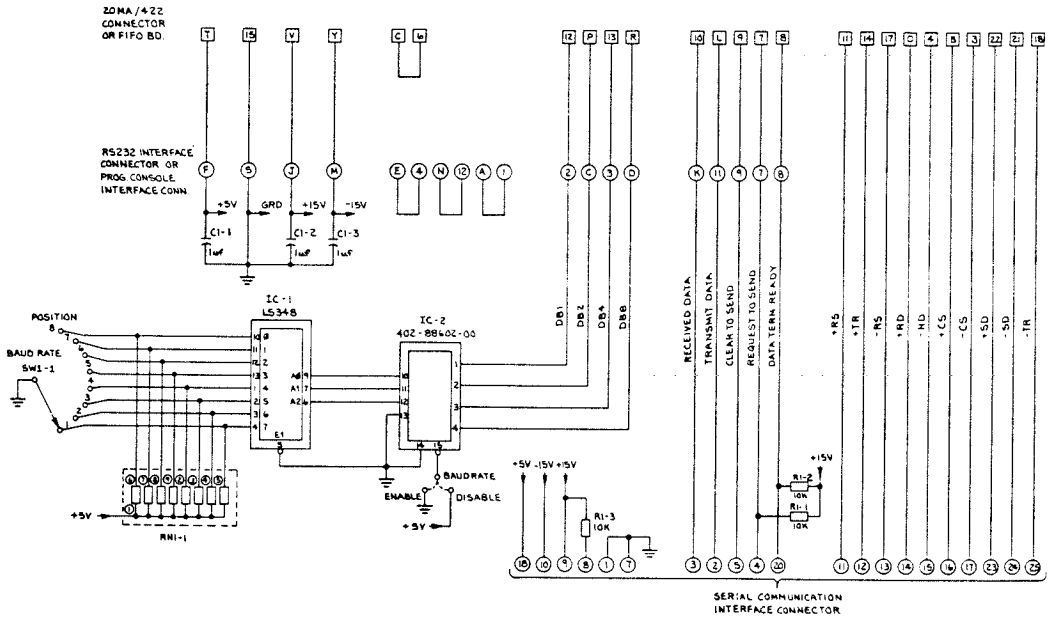

SERIAL COMMUNICATIONS FACEPLATE SCHEMATIC

VIDEO INTERFACE MODULE

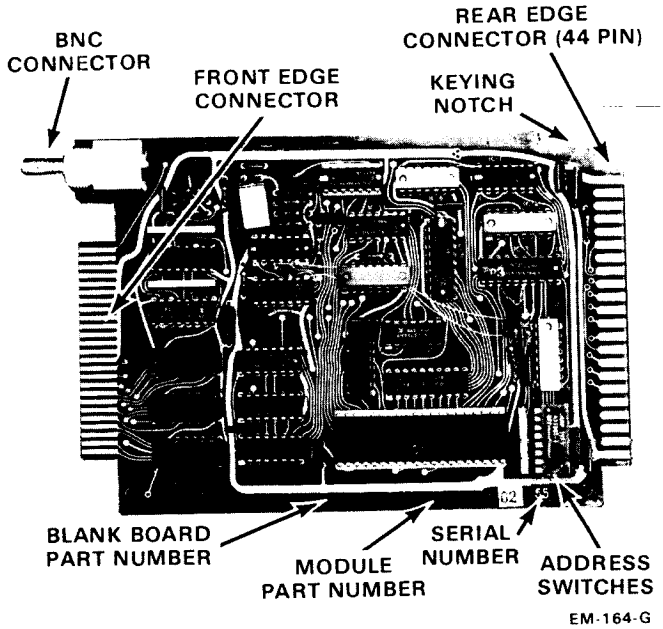

FIGURE 1. VIDEO INTERFACE MODULE

1.0 INTRODUCTION

A video display system may be constructed of a Video Interface Module, from one to four Video Memory Modules, and a standard video monitor (CRT). This combination provides the capability of displaying alphanumeric and/or graphic characters in many sizes and formats. In general, data can be arranged in 12- to 80-character lines, with 6 to 25 lines on a screen.

2.0 ADDRESSING

The Video Interface Module occupies four memory locations. The six board-mounted Address Switches must be set for the lowest of the four addresses desired. TABLE 1 contains the Address Switch settings for the 60 possible beginning address points.

Note that no two modules may occupy the same address area in the Programmable Controller. In addition, the Video Interface Module may not occupy the highest 16 addresses (2240-2255); these locations are reserved for use by fixed-address modules. The Video Interface Module may only be installed

TABLE 1. ADDRESS SWITCH SETTINGS

PC ADDRESS	SWITCHES 123456	PC ADDRESS	SWITCHES 123456	PC ADDRESS	SWITCHES 123456
2000	ON OFF	2088	ON OFF	2176	ON OFF
2004	ON OFF	2092	ON OFF	2180	ON OFF
2008	ON OFF	2096	ON OFF	2184	ON OFF
2012	ON OFF	2100	ON OFF	2188	ON OFF
2016	ON OFF	2104	ON OFF	2192	ON OFF
2020	ON OFF	2108	ON OFF	2196	ON OFF
2024	ON OFF	2112	ON OFF	2200	ON OFF
2028	ON OFF	2116	ON OFF	2204	ON OFF
2032	ON OFF	2120	ON OFF	2208	ON OFF
2036	ON OFF	2124	ON OFF	2212	ON OFF
2040	ON OFF	2128	ON OFF	2216	ON OFF
2044	ON OFF	2132	ON OFF	2220	ON OFF
2048	ON OFF	2136	ON OFF	2224	ON OFF
2052	ON OFF	2140	ON OFF	2228	ON OFF
2056	ON OFF	2144	ON OFF	2232	ON OFF
2060	ON OFF	2148	ON OFF	2236	ON OFF
2064	ON OFF	2152	ON OFF		
2068	ON OFF	2156	ON OFF		
2072	ON OFF	2160	ON OFF		
2076	ON OFF	2164	ON OFF		
2080	ON OFF	2168	ON OFF		
2084	ON OFF	2172	ON OFF		

in the Master Rack. Extension Racks are used for AC and DC Input/Output Modules.

3.0 HARDWARE INTERFACING

3.1 MODULE INTERCONNECTION

The Video Interface and Video Memory Modules are interconnected by a short 50-conductor ribbon cable. This cable mates with the front edge connectors and permits the transfer of memory addresses and data among the modules. No faceplates are available for these modules. A typical ribbon cable installation is shown in FIGURE 2.

3.2 VIDEO MONITOR INTERCONNECTION

A BNC socket is provided for making connections to a standard 75-ohm coaxial cable assembly. The video monitor should appear as a 75-ohm termination

VIDEO INTERFACE MODULE

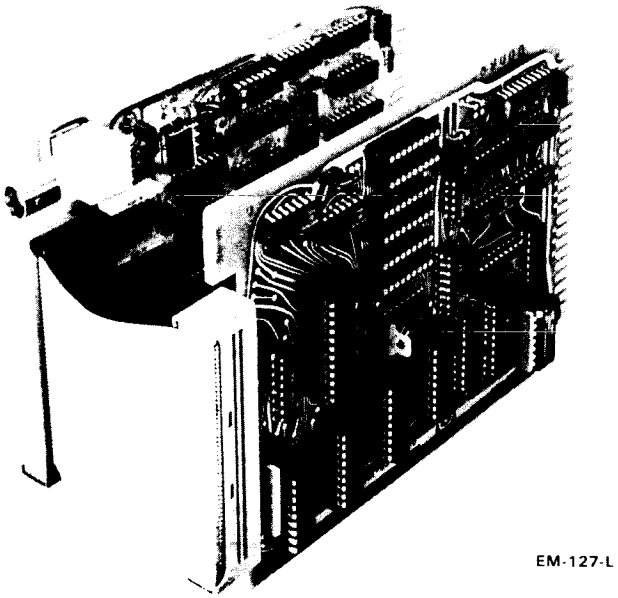

FIGURE 2. RIBBON CABLE INSTALLATION

load to the cable. Maximum cable length is dependent on several factors including the quality of the cable, the amount of electrical noise in the area, and the maximum amount of noise (snow) permitted on the video screen.

4.0 AVAILABLE VERSIONS

The Video Interface Module can be supplied in several different versions, depending on the crystal frequency. The highest crystal frequency, 12.576 MHz, allows the most characters per horizontal line (64 characters at 10 dots per character). Lower frequencies permit larger (but fewer) characters on the screen. If special requirements arise, contact the factory for assistance.

5.0 INSTALLATION

IMPORTANT

ENSURE THAT POWER TO THE CARD RACK IS OFF BEFORE INSERTING OR REMOVING THIS OR ANY MICRO-COMPUTER MODULE. Failure to do so may result in permanent damage to the module.

The Video Interface Module must be installed in the Master Rack. The rack is physically keyed to prevent modules from being inserted incorrectly. Set the Address Switches per the instructions in Section 2.0. Fasten the ribbon cable before applying power.

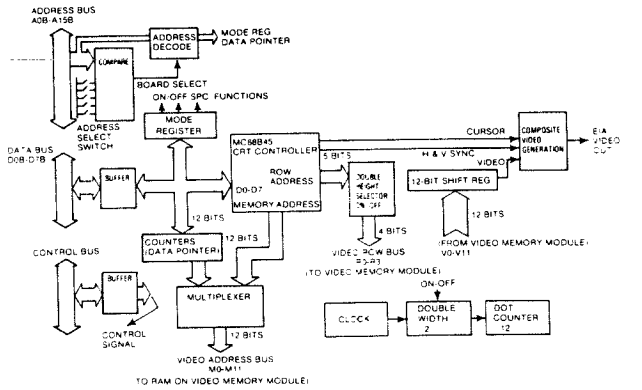

A000204

FIGURE 3. BLOCK DIAGRAM

VIDEO INTERFACE MODULE

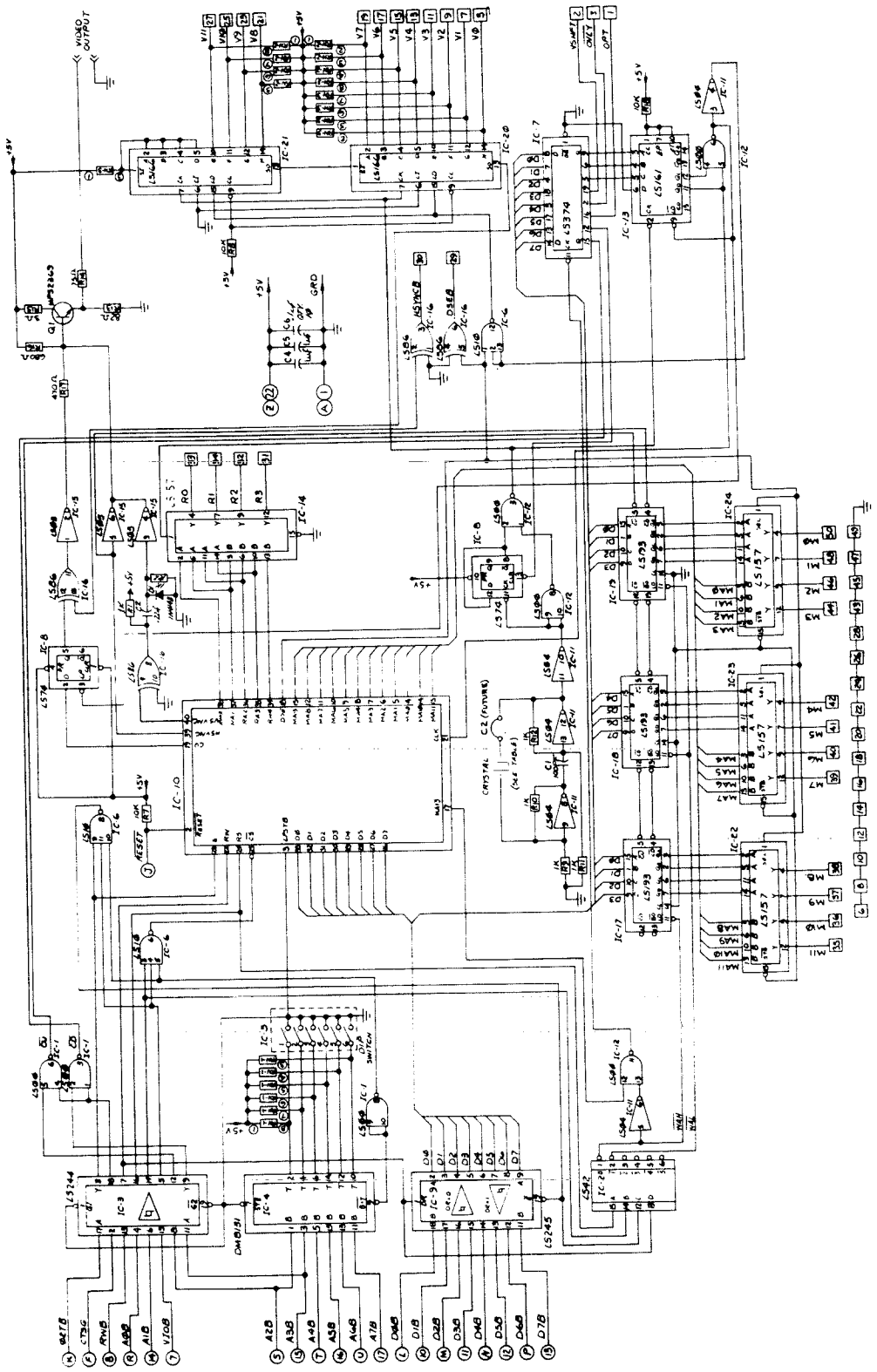

502-02904-03

FIGURE 4. SCHEMATIC

VIDEO MEMORY MODULE

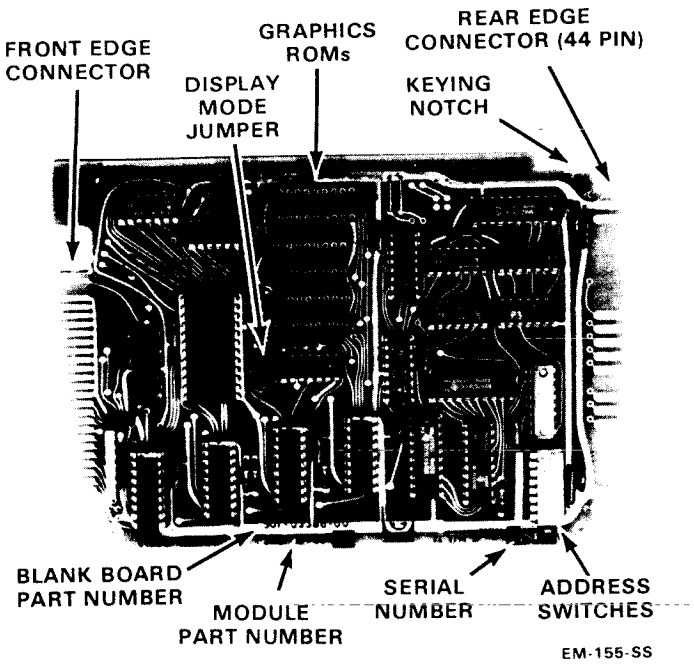

FIGURE 1. VIDEO MEMORY MODULE

TABLE 1. ADDRESS SWITCH SETTINGS

PC ADDRESS	SWITCHES 123456	PC ADDRESS	SWITCHES 123456	PC ADDRESS	SWITCHES 123456
2000	ON OFF	2088	ON OFF	2176	ON OFF
2004	ON OFF	2092	ON OFF	2180	ON OFF
2008	ON OFF	2096	ON OFF	2184	ON OFF
2012	ON OFF	2100	ON OFF	2188	ON OFF
2016	ON OFF	2104	ON OFF	2192	ON OFF
2020	ON OFF	2108	ON OFF	2196	ON OFF
2024	ON OFF	2112	ON OFF	2200	ON OFF
2028	ON OFF	2116	ON OFF	2204	ON OFF
2032	ON OFF	2120	ON OFF	2208	ON OFF
2036	ON OFF	2124	ON OFF	2212	ON OFF
2040	ON OFF	2128	ON OFF	2216	ON OFF
2044	ON OFF	2132	ON OFF	2220	ON OFF
2048	ON OFF	2136	ON OFF	2224	ON OFF
2052	ON OFF	2140	ON OFF	2228	ON OFF
2056	ON OFF	2144	ON OFF	2232	ON OFF
2060	ON OFF	2148	ON OFF	2236	ON OFF
2064	ON OFF	2152	ON OFF		
2068	ON OFF	2156	ON OFF		
2072	ON OFF	2160	ON OFF		
2076	ON OFF	2164	ON OFF		
2080	ON OFF	2168	ON OFF		
2084	ON OFF	2172	ON OFF		

1.0 INTRODUCTION

A video display system may be constructed of a Video Interface Module, one to four Video Memory Modules, and a standard video monitor (CRT). This combination provides the user the capability of displaying alphanumeric and/or graphic characters in many sizes and formats. In general, data can be arranged in 12- to 80- character lines, with 6 to 25 lines on a screen.

2.0 ADDRESSING

Each Video Memory Module occupies four memory locations. The six board-mounted Address Switches must be set for the lowest of the four addresses desired. TABLE 1 contains the Address Switch settings for the 60 possible beginning address points.

Note that no two modules may occupy the same address area in the Programmable Controller. In addition, the Video Memory Module may not occupy the highest 16 addresses (2240-2255); these locations are reserved for use by fixed-address modules. The Video Memory Module may only be installed in the Master Rack. Extension Racks are used for AC and DC Input/Output Modules.

3.0 HARDWARE INTERFACING

The Video Interface and Video Memory Modules are interconnected by a short 50-conductor ribbon cable. This cable mates with the front edge connectors and permits the transfer of memory addresses and data among the modules. No faceplates are available for these modules. A typical ribbon cable installation is shown in FIGURE 2.

4.0 OPTIONAL CAPABILITIES

4.1 GRAPHICS CHARACTERS

In addition to the 128 standard alphanumeric characters, up to 64 graphics (per Video Memory Module) may

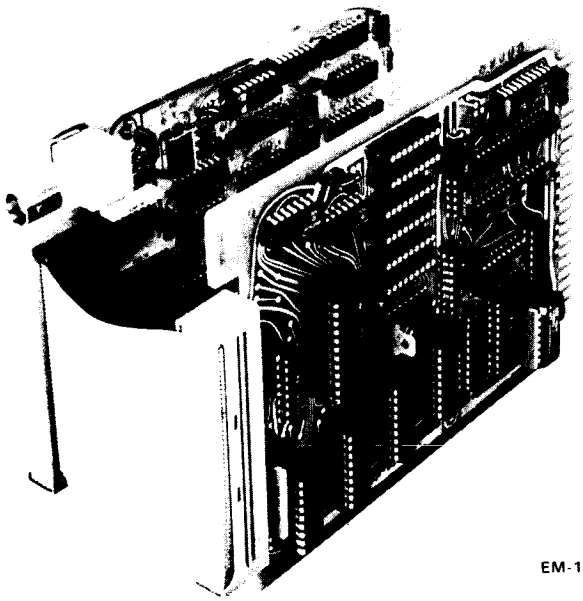

FIGURE 2. RIBBON CABLE INSTALLATION

be added. These characters are stored in three programmed ROM's which are inserted into sockets on the Video Memory Module. Contact the factory for programming worksheets and details.

4.2 DISPLAY MODES

4.2.1 ONE VIDEO MEMORY MODULE

If one module is used, the 3-position jumper is placed in the OFF position. Under software control, there may be either one image (using any of the 192 possible characters), or two overlaying images, consisting of one all-alphanumeric and one all-graphic image.

4.2.2 TWO/FOUR VIDEO MEMORY MODULES

Additional display mode possibilities exist when the number of Video Memory Modules increases:

1. The additional modules may be used to permit overlaying several graphic character sets.

2. The additional modules may be used to increase the amount of character storage available. By using additional modules in this manner, several "pages" of video data could be stored for quick retrieval.

5.0 INSTALLATION

IMPORTANT

ENSURE THAT POWER TO THE CARD RACK IS OFF BEFORE INSERTING OR REMOVING THIS OR ANY MICRO-COMPUTER MODULE. Failure to do so may result in permanent damage to the module.

Video Memory Modules must be installed in the Master Rack. The rack is physically keyed to prevent modules from being inserted incorrectly. Set the Address Switches per the instructions in Section 2.0. Fasten the ribbon cable before applying power.

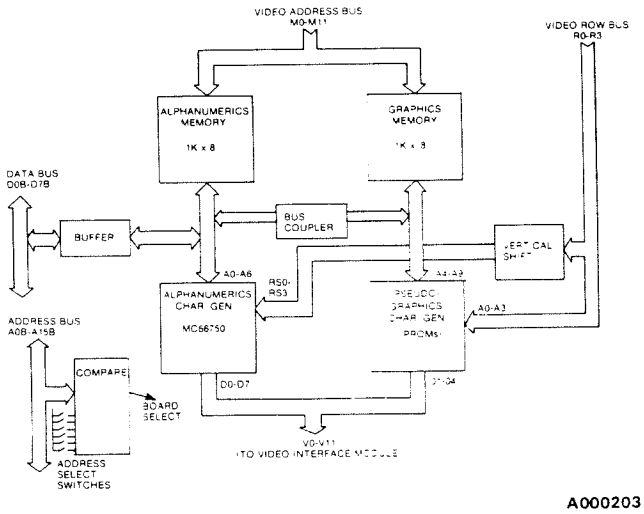

FIGURE 3. BLOCK DIAGRAM

VIDEO MEMORY MODULE

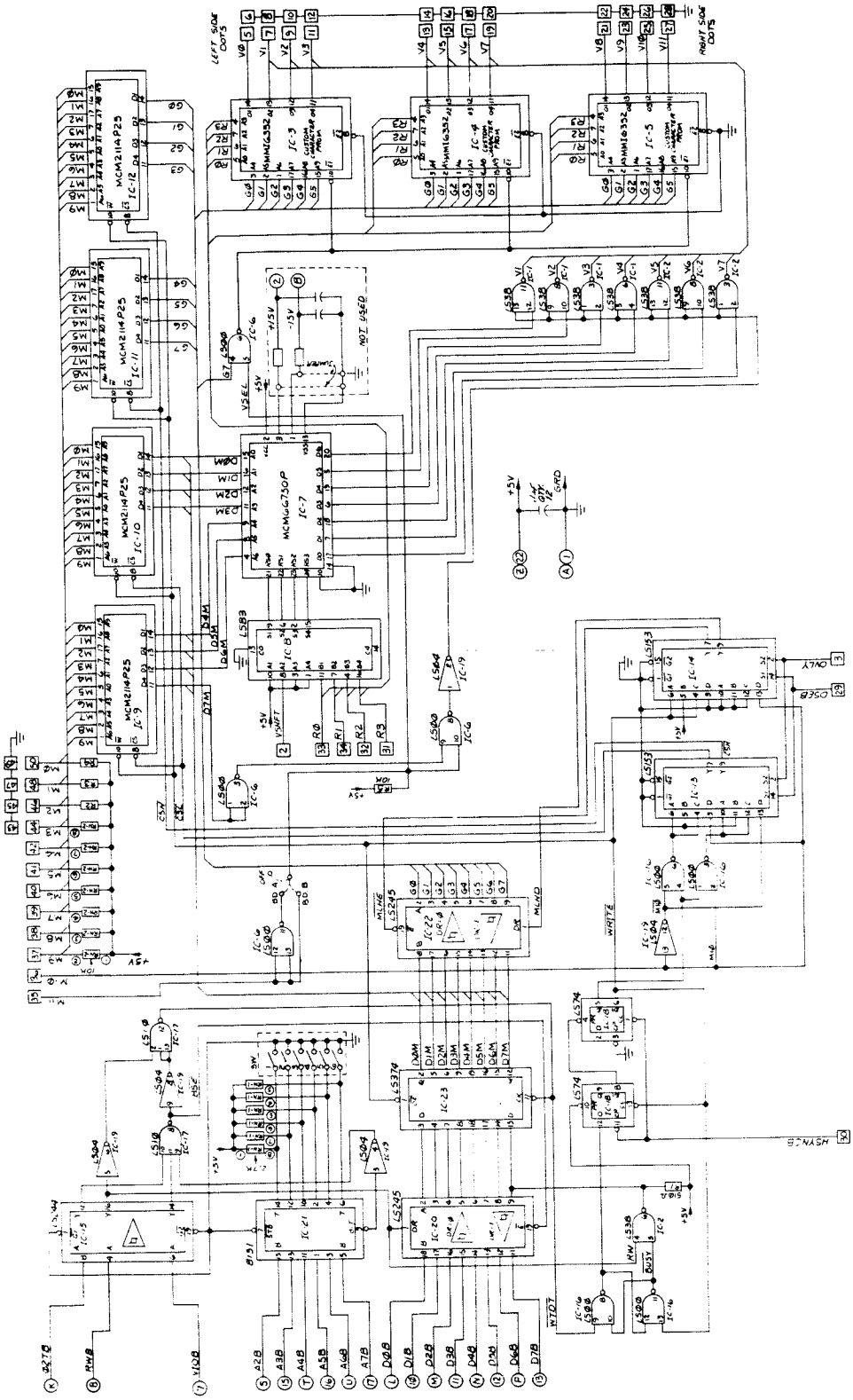

FIGURE 4. SCHEMATIC

MICROPROCESSOR DIGITIZING MODULE

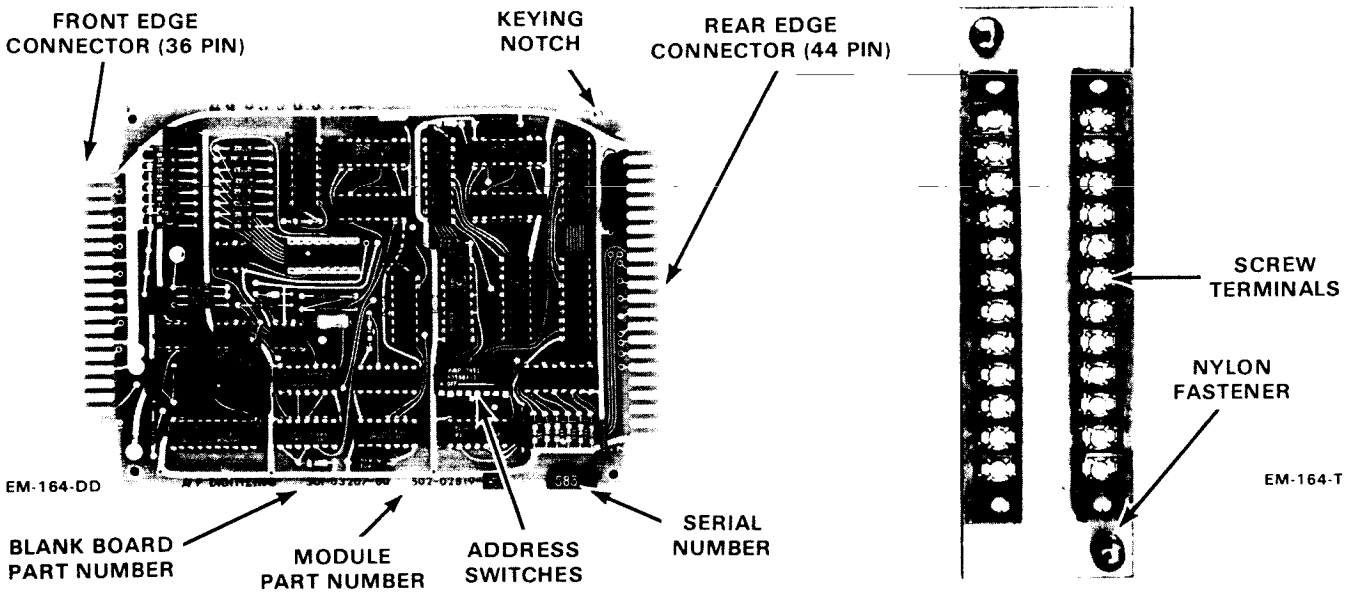

FIGURE 1. MICROPROCESSOR DIGITIZING MODULE & OPTIONAL FACEPLATE

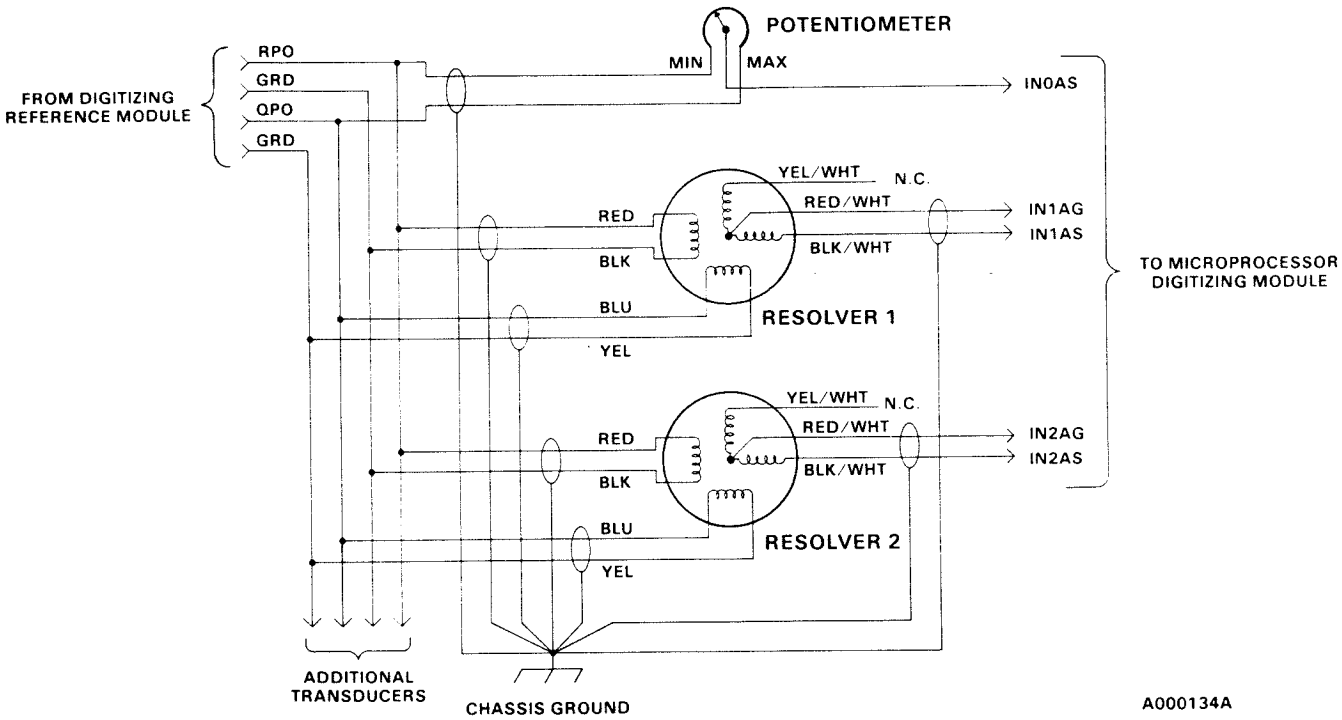

FIGURE 2. TYPICAL TRANSDUCER WIRING

1.0 INTRODUCTION

The uP (microprocessor) Digitizing Module, part number 502-02819-00 contains circuitry to convert feedback signals from phase-type position measurement transducers into binary values. This module has the ability to "digitize" up to eight transducers. The companion Digitizing Reference Module generates synchronization signals used in the digitizing process and must be wired to the uP Digitizing Module.

External devices are connected to the module through either a 36-pin card edge connector or a uP Digitizing Faceplate, part number 502-03202-00. The latter option permits convenient wiring to compression screw terminals.

2.0 INSTALLATION

The uP Digitizing Module may only be installed in the Master Rack. Extension Racks are used for AC and DC Input/Output Modules.

The rack is physically keyed to prevent the modules from being inserted incorrectly. Set the Address and Filter switches per the instructions in Section 3.0 and 5.0 respectively.

IMPORTANT

ENSURE THAT POWER TO THE RACK IS OFF BEFORE INSERTING OR REMOVING THIS OR ANY OTHER MICROCOMPUTER MODULE. Failure to do so may result in permanent damage to the module.

Figure 2 illustrates typical resolver and potentiometer connections. Shielded cable, such as Belden 8762S, should be used for transducer wiring. The cable shields should be connected to chassis ground at the PiC end and left unconnected at the transducer end. Refer to the shielding instructions in Section 3.

The Digitizing Reference and uP Digitizing Modules should be interconnected with short lengths (4") of #20 blue wire. Make wiring connections to and fasten the card edge connectors or faceplates before applying power.

3.0 ADDRESSING

The uP Digitizing Module occupies four memory locations. The six board-mounted Address switches must be set for the lowest of the four addresses desired. Table 1 contains the Address switch settings for the 60 possible beginning address points.

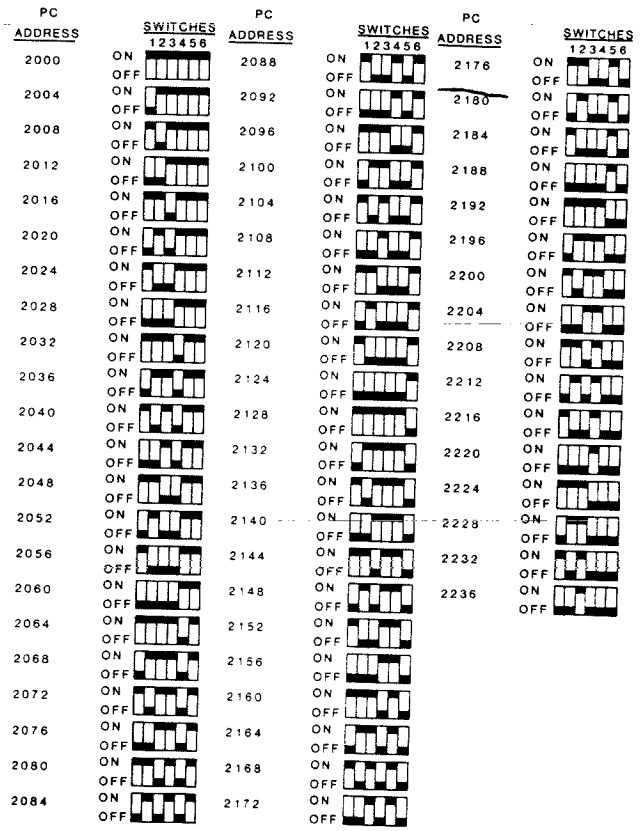

TABLE 1. ADDRESS SWITCH SETTINGS

NOTE

Switches 7 and 8 are not part of the addressing scheme and must be set per the instructions in Section 5.0

4.0 HARDWARE INTERFACING

The uP Digitizing Module interfaces with measurement transducers and the companion Digitizing Reference Module through either a card edge connector or an optional faceplate connector. The module will accept analog feedback signals from up to eight transducers.

NOTE

This module may be used with up to eight transducers for open loop systems. However, for closed loop systems, only two transducers per module are permitted. For systems using coordinated motion, only one transducer per module is permitted.

4.1 CARD EDGE CONNECTOR

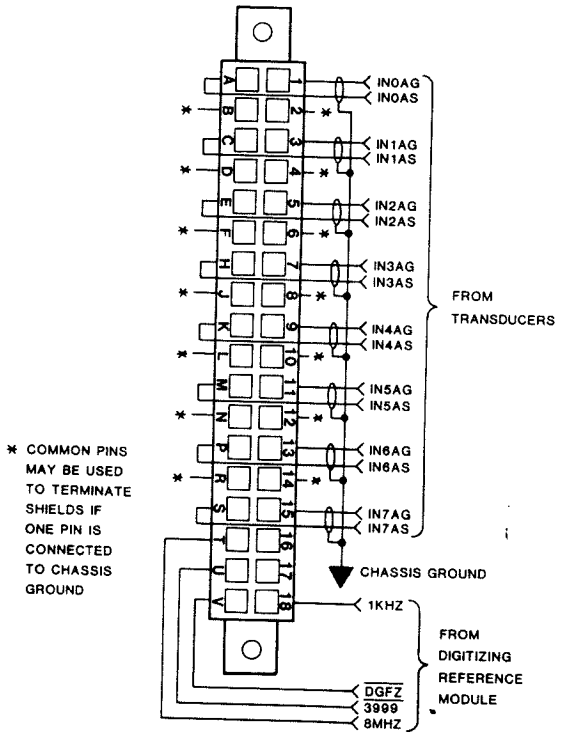

FIGURE 3. CARD EDGE CONNECTOR WIRING

A 36-pin card edge connector, part number 401-50657-00, may be used to make wiring connections from the module to external devices. Phosphor-bronze crimp contacts, with gold-over-nickel plating, are available as part number 401-50460-00. "Dummy" contacts, part number 401-50459-00, may be inserted into the connector at unused places to provide a tighter grip between the connector and the module card edge.

4.2 FACEPLATE

The up Digitizing Faceplate, part number 502-03202-00, allows wiring connections to be conveniently made to compression screw terminals.

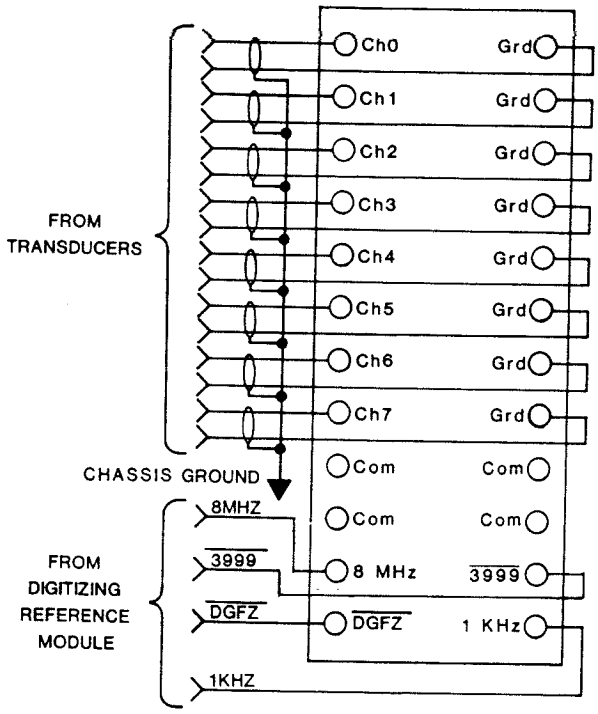

FIGURE 4. FACEPLATE CONNECTOR WIRING

5.0 NOISE FILTER

An active filter is available to reduce noise that may be picked up in an Inductosyn® 1 system. This filter is placed in or out of the circuit via two of the switches in the Address switch group. See Figure 5.

---

1 Inductosyn® is a registered trademark of Farrand Industries, Inc.

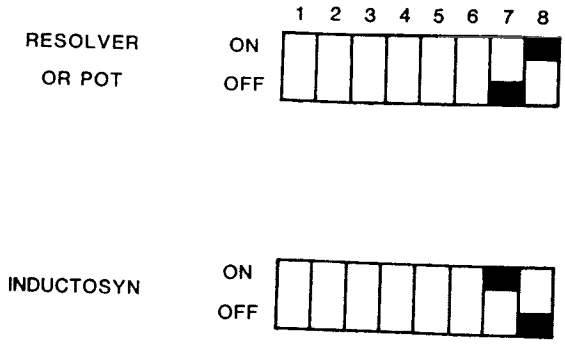

FIGURE 5. FILTER SWITCH SETTINGS

DIGITIZING REFERENCE MODULE

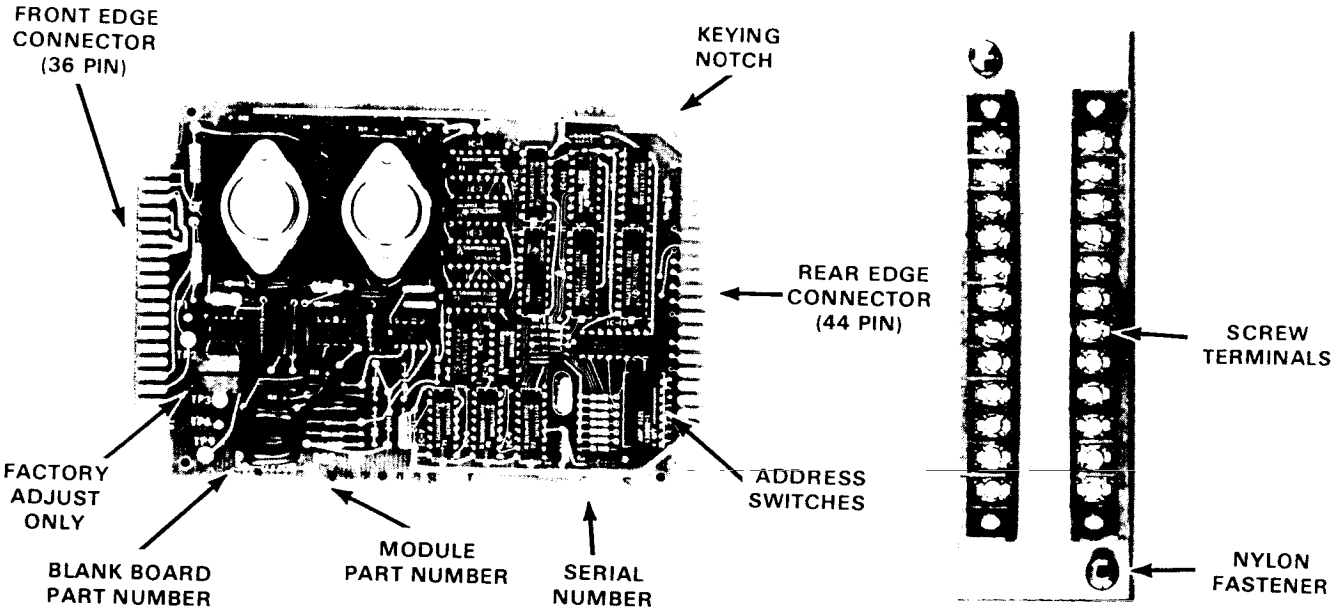

FIGURE 1. DIGITIZING REFERENCE MODULE & OPTIONAL FACEPLATE

EM-164-CC

1.0 INTRODUCTION

The Digitizing Reference Module, part number 502-02820-01, contains circuitry to generate the accurate Reference and Quadrature signals used to drive position measurement transducers. Synchronization signals are also generated for the companion Microprocessor Digitizing Module.

External devices are wired to the module through either a 36-pin card edge connector or a Digitizing Reference Faceplate (part number 502-03203-00), shown in FIGURE 1. The latter option permits convenient wiring to compression screw terminals.

2.0 ADDRESSING

NOTE

Switch 8 of the Address switches opens or closes the on-board clock circuit and is used for factory testing of the module. Switch 8 must be left in the ON position or the module will be inoperative.

TABLE 1. ADDRESS SWITCH SETTINGS

PIC ADDRESS	SWITCHES 1 2 3 4 5 6 7 8	PIC ADDRESS	SWITCHES 1 2 3 4 5 6 7 8	PIC ADDRESS	SWITCHES 1 2 3 4 5 6 7 8
2000	ON OFF	2088	ON OFF	2176	ON OFF
2004	ON OFF	2092	ON OFF	2180	ON OFF
2008	ON OFF	2096	ON OFF	2184	ON OFF
2012	ON OFF	2100	ON OFF	2188	ON OFF
2016	ON OFF	2104	ON OFF	2192	ON OFF
2020	ON OFF	2108	ON OFF	2196	ON OFF
2024	ON OFF	2112	ON OFF	2200	ON OFF
2028	ON OFF	2116	ON OFF	2204	ON OFF
2032	ON OFF	2120	ON OFF	2208	ON OFF
2036	ON OFF	2124	ON OFF	2212	ON OFF
2040	ON OFF	2128	ON OFF	2216	ON OFF
2044	ON OFF	2132	ON OFF	2220	ON OFF
2048	ON OFF	2136	ON OFF	2224	ON OFF
2052	ON OFF	2140	ON OFF	2228	ON OFF
2056	ON OFF	2144	ON OFF	2232	ON OFF
2060	ON OFF	2148	ON OFF	2236	ON OFF
2064	ON OFF	2152	ON OFF		
2068	ON OFF	2156	ON OFF		
2072	ON OFF	2160	ON OFF		
2076	ON OFF	2164	ON OFF		
2080	ON OFF	2168	ON OFF		
2084	ON OFF	2172	ON OFF		

DIGITIZING REFERENCE MODULE

The digitizing Reference Module occupies four memory locations. The six board-mounted address switches must be set for the lowest of the four addresses desired. TABLE 1, contains the switch settings for the 60 possible beginning address points.

3.0 HARDWARE INTERFACING

The Digitizing Reference Module interfaces with the measurement transducers and the companion Microprocessor Digitizing Module through either a card-edge connector or an optional faceplate connector. The module will drive 16 potentiometers or brushless resolvers.

3.1 CARD EDGE CONNECTOR

A 36-pin card-edge connector, part 401-50657-00, may be used to wire the module to external devices. Phosphor bronze crimp contacts, with gold-over-nickel plating, are available as part 401-50460-00. "Dummy" contacts, part 401-50459-00, may be inserted into the connector at unused places for improved holding power.

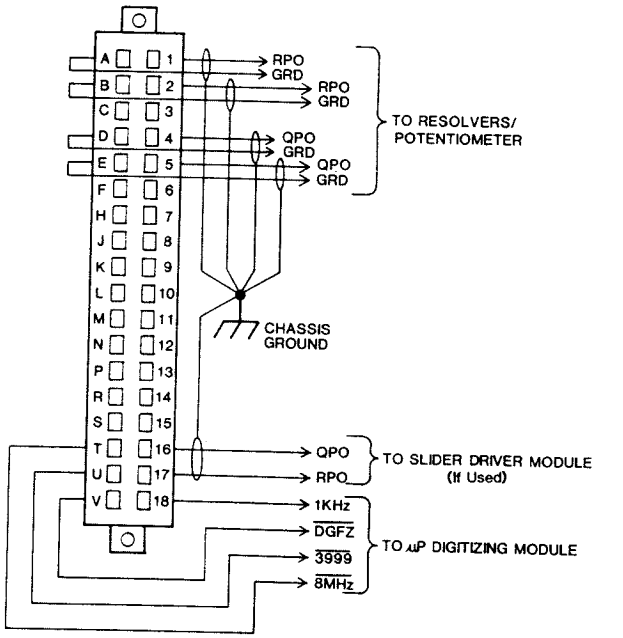

FIGURE 2. CARD EDGE CONNECTOR WIRING

3.2 FACEPLATE CONNECTOR

The Faceplate Connector allows wiring to be conveniently made to compression screw terminals.

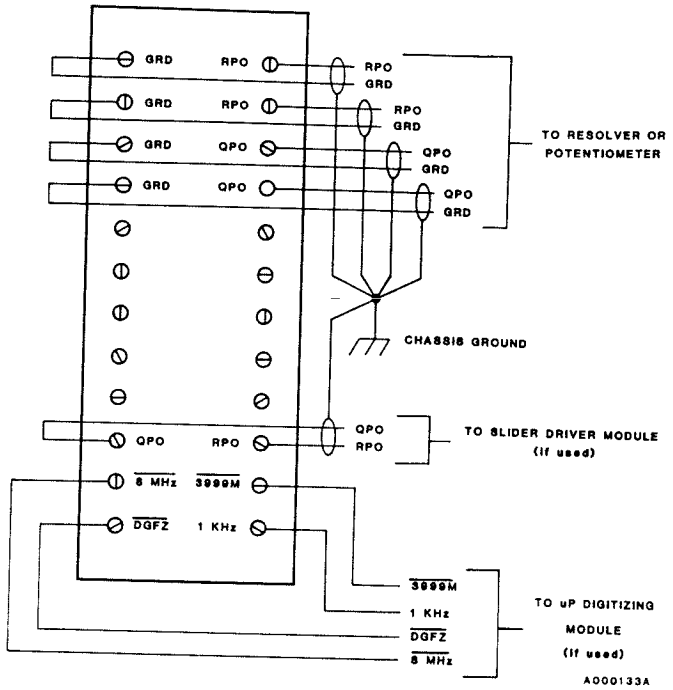

FIGURE 3. FACEPLATE CONNECTOR WIRING

4.0 INSTALLATION

IMPORTANT

ENSURE THAT POWER TO THE CARD RACK IS OFF BEFORE INSERTING OR REMOVING THIS OR ANY MICRO-COMPUTER MODULE. Failure to do so may result in permanent damage to the module.

The Digitizing Reference Module may only be installed in the Master Rack. Expansion Racks are used for AC and DC Input/Output Modules.

The rack is physically keyed to prevent modules from being inserted incorrectly. Set the Address Select switches per the instructions in Section 2.0. FIGURE 6 illustrates typical resolver and potentiometer connections. Shielded cable, such as Belden 8762S, should be used for transducer wiring.

DIGITIZING REFERENCE MODULE

The cable shield should be connected to chassis ground at the PC end, and left unconnected at the transducer end. The Digitizing Reference and Microprocessor Digitizing Modules should be interconnected with short lengths (4") of #20 blue wire. Wire and fasten the card edge connector or faceplate before applying power.

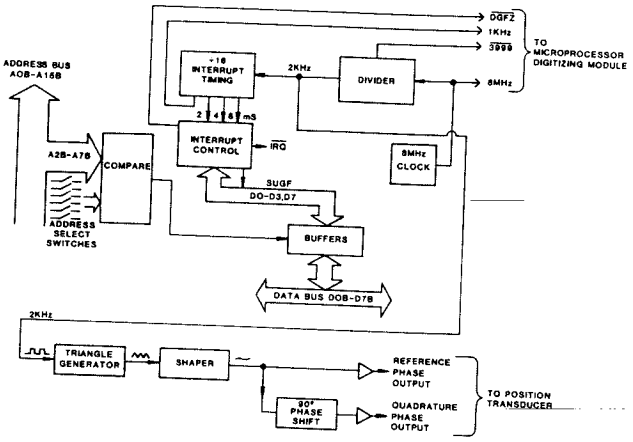

FIGURE 5. BLOCK DIAGRAM

B000130

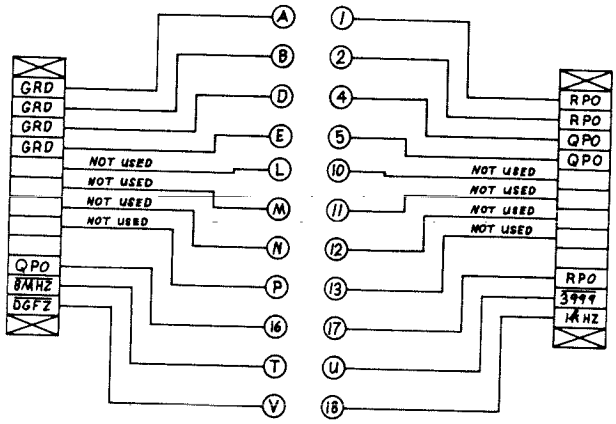

FIGURE 6 FACEPLATE SCHEMATIC

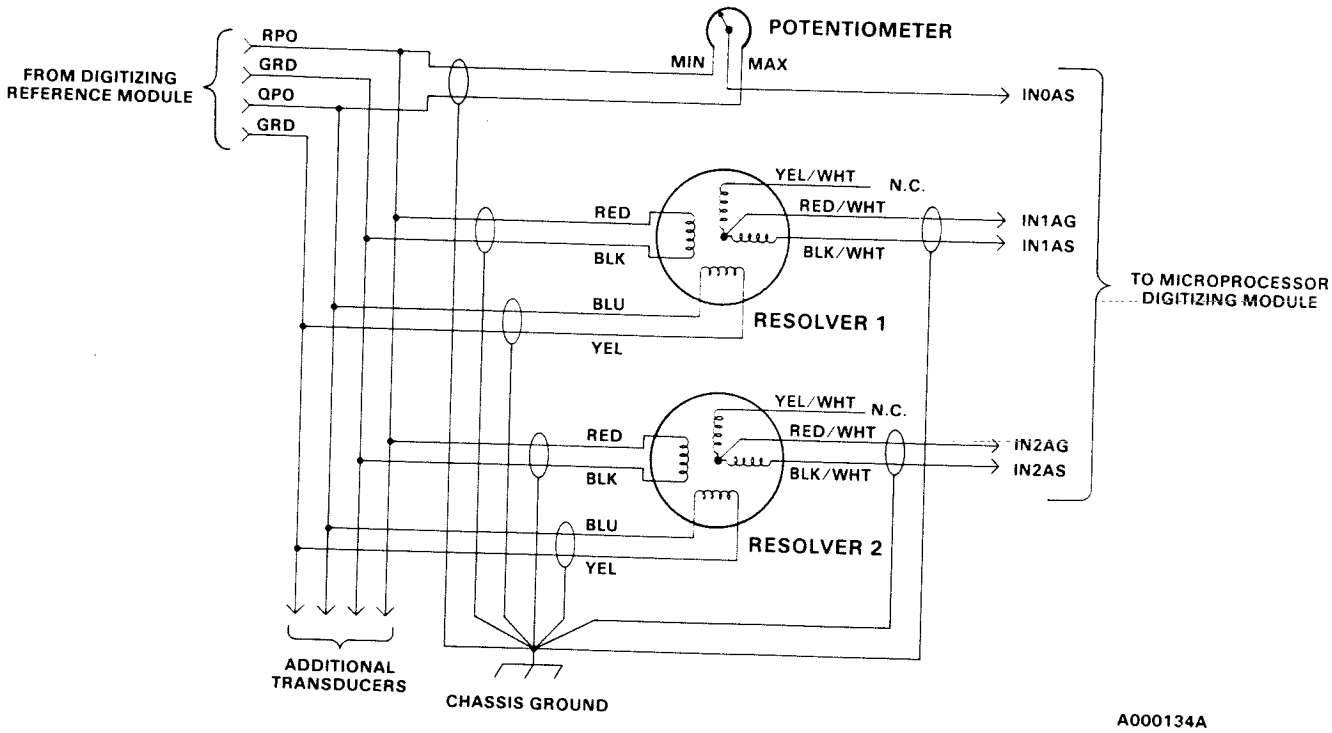

A000134A

FIGURE 4. TYPICAL TRANSDUCER WIRING

5.0 RECOMMENDED RESOLVERS

The brushless resolvers listed here are typical of those that can be used with the PiC's 2KHz Phase Digitizing Modules.

- Harowe - 11BRW300-F-1/10
  Note: This resolver is sold by G&L under the part number 501-98409-00.
- Clifton - 11BHW-OIE/A004
- Kearfott - CR41095059

Virtually any resolver, brush or brushless, can be used with 2KHz phase digitizing providing it conforms to the specifications listed in Sections 5.1 and 5.2. However, G&L recommends brushless resolvers for greater reliability and longer life.

5.1 GAIN (Transformation Ratio)

G&L recommends a gain (also referred to as the transformation ratio) of at least 50%. A gain of less than 50% may result in a Loss of Feedback error. However, the gain may be as high as 140%.

The Digitizing Reference Module produces a voltage of approximately 15 volts (peak to peak). Resolvers with a 50% gain will have an output of approximately 7.5 volts DC (peak to peak). The maximum allowable output from any resolver used with the PiC is approximately 21 volts peak to peak (140%).

5.2 RESOLUTION

The resolver should have a resolution of approximately 10 minutes (one sixth of one degree) or greater.

RESOLVER/INDUCTOSYN DRIVER MODULE

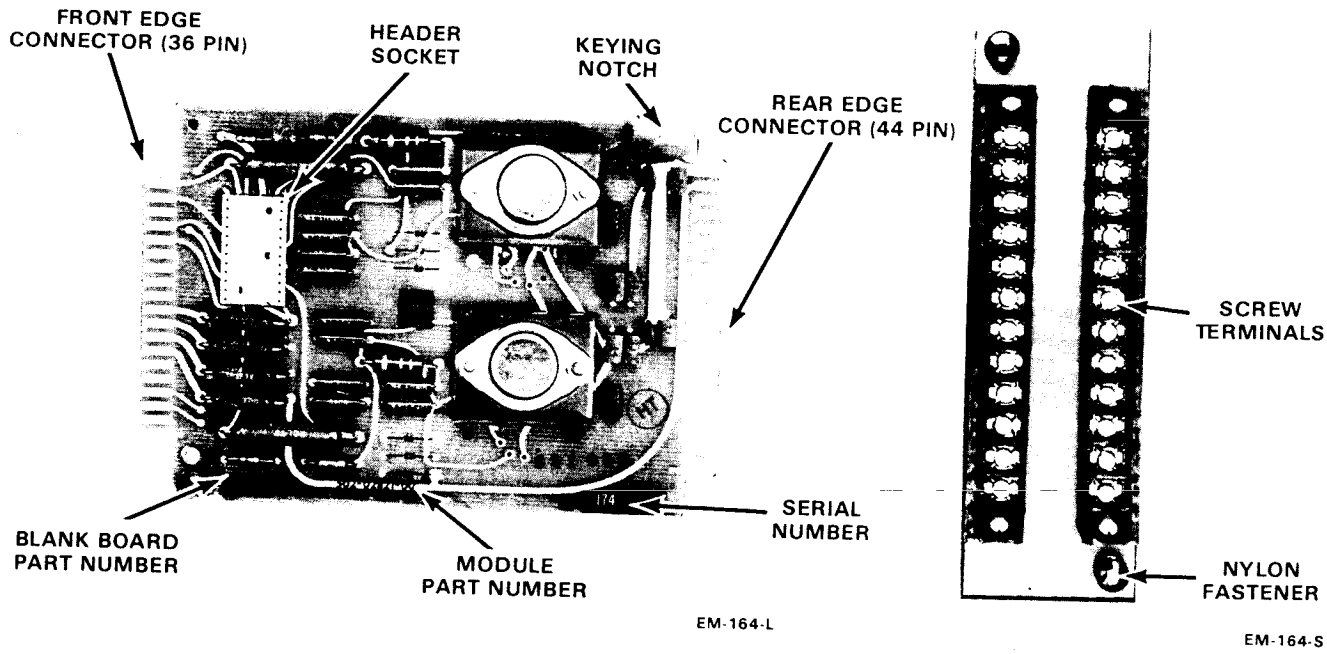

FIGURE 1. DRIVER MODULE & OPTIONAL FACEPLATE

1.0 INTRODUCTION

The Resolver/Inductosyn Driver Module contains circuitry to provide extra drive capability for additional resolvers or for Inductosyn sliders. The Resolver/Inductosyn Driver Module may also be used to provide extra drive from the D/A Converter Module.

External devices are connected to the module through either a 36-pin card edge connector or a Resolver/Inductosyn Driver Faceplate. The latter option permits wiring connections to be made to compression screw terminals.

2.0 HARDWARE INTERFACING

The Resolver/Inductosyn Driver Module interfaces with the measurement transducers and the companion Digitizing Reference Module. The Resolver/Inductosyn Driver Module will drive up to sixteen resolvers in the voltage drive mode (in addition to the sixteen resolvers driven by the Digitizing Reference Module), and up to two Inductosyn sliders in the current drive mode.

2.1 CARD EDGE CONNECTOR

A 36-pin card edge connector may be used to connect the module to external devices. Phosphor bronze crimp contacts, with gold-over-nickel plating, are available. "Dummy" contacts may be inserted into the connector at unused places for improved holding power.

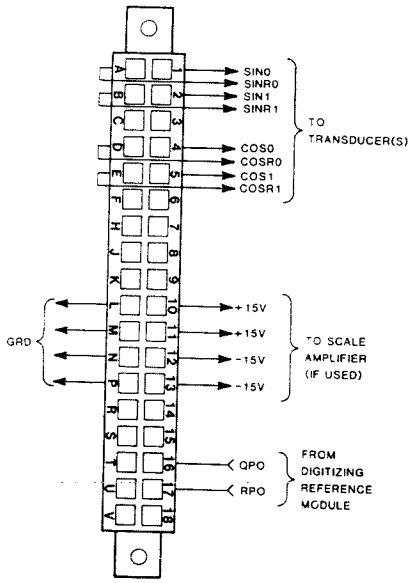

FIGURE 2. CARD EDGE CONNECTOR WIRING

2.2 FACEPLATE CONNECTOR

The Faceplate Connector allows wiring connections to be conveniently made to compression screw terminals.

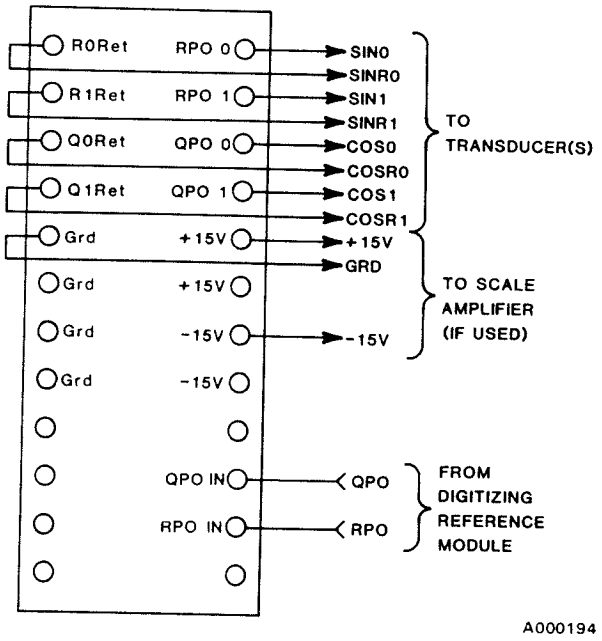

FIGURE 3. FACEPLATE CONNECTOR WIRING

3.0 INSTALLATION

IMPORTANT

ENSURE THAT POWER TO THE CARD RACK IS OFF BEFORE INSERTING OR REMOVING THIS OR ANY MICRO-COMPUTER MODULE. Failure to do so may result in permanent damage to the module.

The Resolver/Inductosyn Driver Module may only be installed in the Master Rack. Expansion Racks are used for AC and DC Input/Output Modules. The rack is physically keyed to prevent modules from being inserted incorrectly.

If only resolvers are to be driven, install Patch Plug 502-02749-52 on the module. The resolvers may be driven from either channel 0 (SIN 0 & COS 0) or channel 1 (SIN 1 & COS 1), or both.

If one Inductosyn slider and up to sixteen resolvers are to be driven, install Patch Plug 502-02749-62 on the module. The slider must be connected to channel 0, and the resolvers must be connected to channel 1.

If two Inductosyn sliders are to be driven, install Patch Plug 502-02749-50 on the module. Connect one slider to channel 0, and the other to channel 1.

Make wiring connections to and fasten the card edge connector or faceplate before applying power.

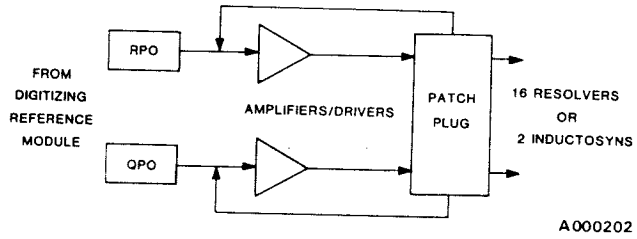

FIGURE 4. BLOCK DIAGRAM

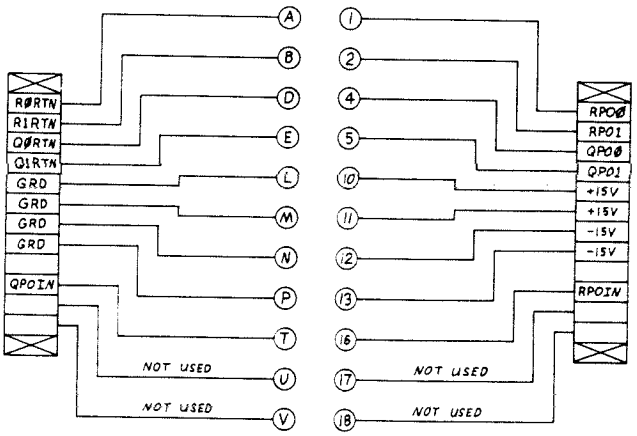

FIGURE 5. FACEPLATE SCHEMATIC

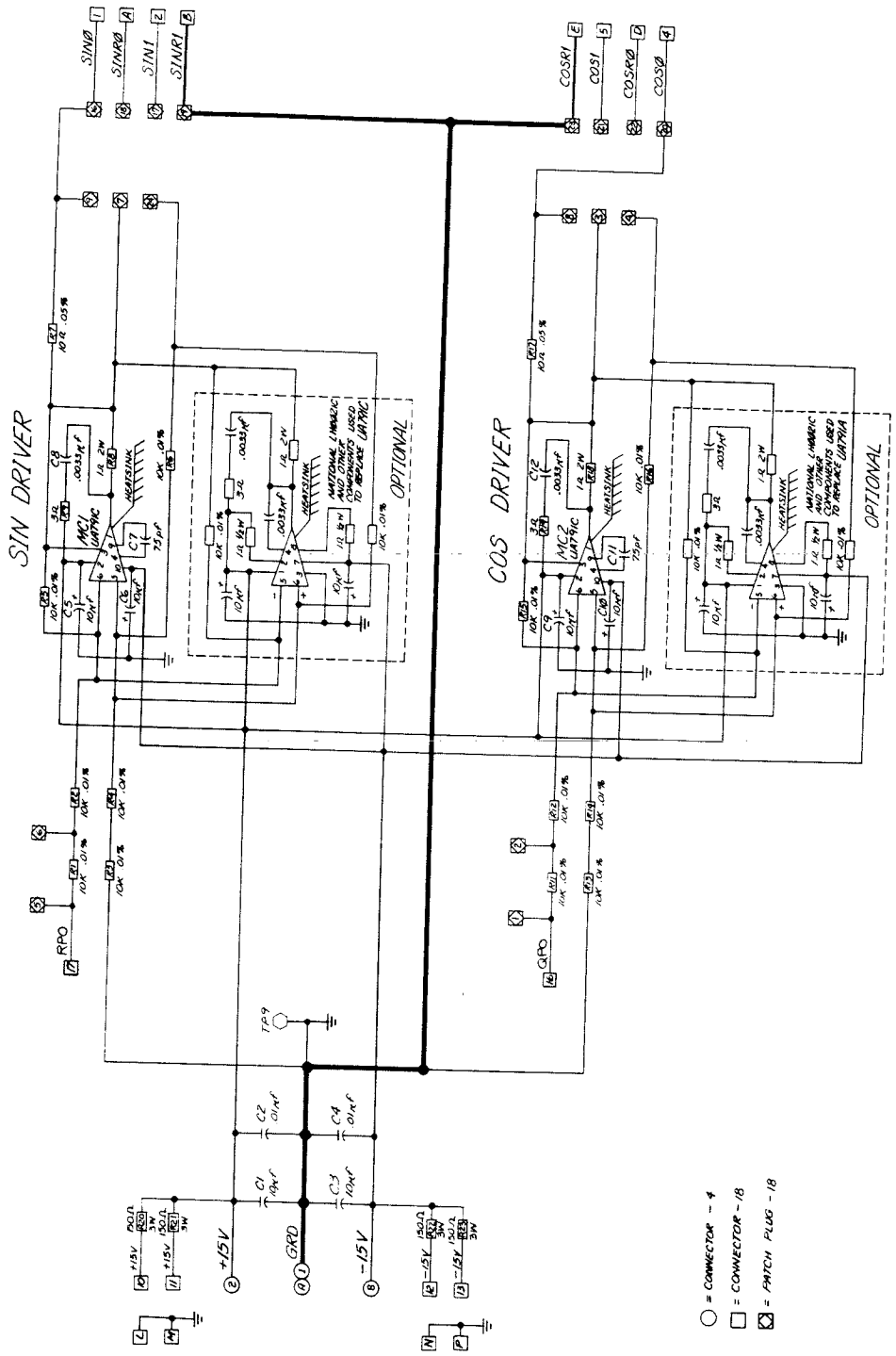

502-02821-00

FIGURE 6. RESOLVER/INDUCTOSYN DRIVER MODULE SCHEMATIC

ENCODER MODULE

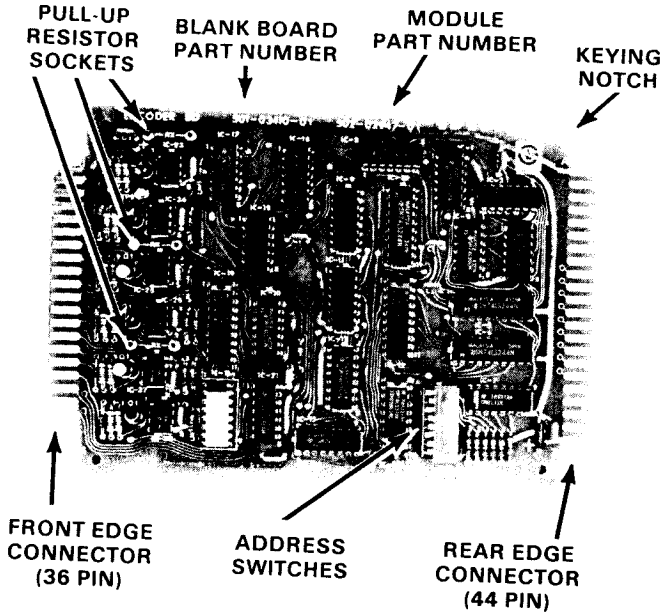

FIGURE 1. ENCODER MODULE

1.0 INTRODUCTION

The Encoder Module (part number 502-02947-01) contains circuitry to convert feedback signals from an incremental encoder into binary values. Incremental encoders are position measurement transducers that provide displacement information in a square wave format.

NOTE

Encoder signals that are in a sine wave format must be shaped into a square wave format before being fed into the Encoder Module.

Encoders are connected to the Encoder Module through a 36-pin edge connector.

2.0 COUNTER

Square waves from the encoder are recorded by a 16-bit up/down counter. If the encoder is properly phased, a square wave that corresponds to clockwise rotation of the encoder will cause the counter to increment. Also, a square wave that corresponds to counterclockwise rotation of the encoder will cause the counter to decrement.

Encoder Call Routines are available that monitor and manipulate the counter.

3.0 ENCODER SELECTION

Feedback signals from either pulse or quadrature type encoders may be monitored by the Encoder Module. Jumpers must be inserted into specified pins on the front edge connector to select the type of encoder being employed. Jumper wiring is explained in Section 3.1.1 and Section 3.2.4.

Incremental encoders have three channels, channel A, channel B and index. For encoders with differential drivers, each channel has two signals, inverted and non-inverted. The Encoder Module will compare the non-inverted signals to the inverted signals to ensure the validity of the signals. A signal is recognized as valid only when the non-inverted and inverted signals are recognized by the Encoder Module as being opposite. For encoders with single-ended drivers, each channel has only the non-inverted signal. Single-ended drivers do not have the noise immunity advantages obtained with differential drivers. Therefore, incremental encoders with single-ended drivers are not recommended for transmission beyond 10 feet. Section 5.0 describes encoder connections for encoders that have single-ended drivers and differential drivers.

NOTE

The use of encoders with differential drivers is strongly recommended in all applications.

3.1 PULSE INCREMENTAL ENCODER

Figure 2 depicts the channel A, channel B and index outputs of a pulse type encoder. When the encoder shaft rotates in a clockwise direction, a continuous pulse train is present on channel A and no signal (a logic 0) is present on channel B. When the encoder shaft rotates in a counterclockwise direction, a continuous pulse train is present on channel B and no signal (a logic 0) is present on channel A. A logic 0 is present on both channels

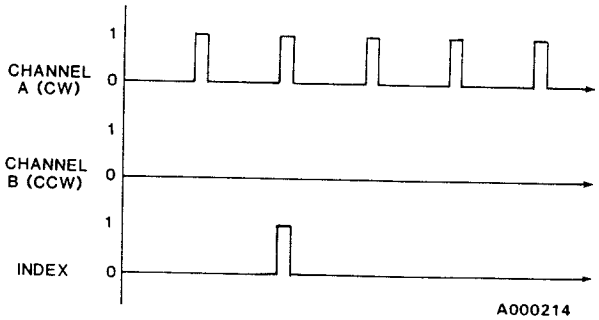

FIGURE 2. PULSE ENCODER OUTPUT

when the encoder shaft is stationary. A pulse is present on the index output once per revolution of the encoder. Figure 2 depicts a pulse type encoder that is rotating in a clockwise direction.

The frequency of channel A and channel B varies according to the resolution (counts/revolution) of the encoder and the revolutions/second. For example; if an encoder has a resolution of 2,000 counts/revolution and the shaft is being rotated at 10 revolutions/second, the frequency of the input to the Encoder Module will be 20,000 counts/second. The maximum input frequency that can be accommodated by the Encoder Module from a pulse type encoder is 100,000 counts/second. The width of the square wave must be greater than two microseconds.

3.1.1 JUMPER WIRING FOR A PULSE TYPE ENCODER

When a pulse type encoder is connected to the Encoder Module, the front edge connector must have pin 13 jumpered to pin A and pin 1 jumpered to pin P.

3.2 QUADRATURE INCREMENTAL ENCODER

Figure 3 depicts the channel A, channel B and index outputs of a quadrature type encoder. A continuous square wave signal is present on channel A and channel B whenever the encoder shaft rotates at a constant speed. Channel A leads channel B by 90 degrees when the encoder shaft rotates in the clockwise direction. Channel A lags channel B by 90 degrees when the encoder shaft rotates in the counterclockwise direction. An on-off signal is present on the index output once per revolution of the encoder. Figure 3 depicts a quadrature type encoder that is rotating in a clockwise direction.

The frequency of channel A and channel B varies according to the resolution (counts/revolution) of the encoder and the revolutions/second. For example; if an encoder has a resolution of 2,000 counts/revolution and the shaft is being rotated at 10 revolutions/second, the frequency of the input to the Encoder Module is 20,000 revolutions/second. The maximum frequency that can be accommodated by the Encoder Module from a quadrature type encoder is 50,000 counts/second.

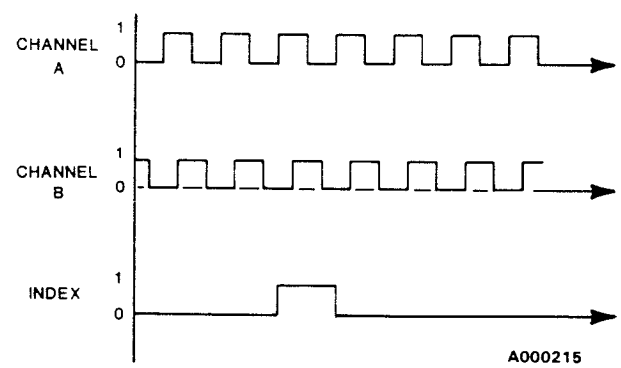

FIGURE 3. QUADRATURE ENCODER OUTPUT

The resolution of the encoder can be varied by selecting either the X2 mode or X4 mode of operation (see Section 3.2.2 and Section 3.2.4). Jumper

wiring for mode selection is explained in Section 3.2.4.

The Encoder Module must be placed in either the X1, X2, or X4 Mode when used to monitor a quadrature type incremental encoder. The desired mode is selected by inserting jumpers between the specified pins on the front edge connector.

3.2.1 X1 MODE

In the X1 Mode, the resolution of the encoder is equal to the specified frequency of the encoder. The counter on the Encoder Module will count the number of off-to-on transitions of channel A. Figure 4 depicts the operation of the X1 Mode.

3.2.2 X2 MODE

In the X2 Mode, the resolution of the encoder is equal to the specified frequency of the encoder times two. The counter on the encoder module will count the number of off-to-on and on-to-off transitions of channel A. Figure 4 depicts the operation of the X2 Mode.

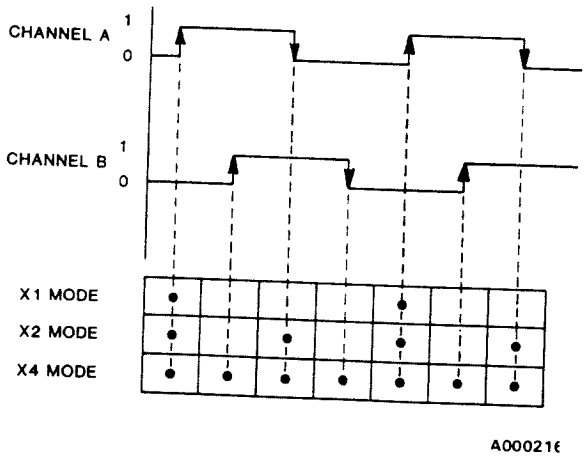

FIGURE 4. QUADRATURE MODES

3.2.3 X4 MODE

In the X4 Mode, the resolution of the encoder is equal to the specified frequency of the encoder times four. The counter on the Encoder Module will count the number of off-to-on transitions of channel A and channel B. Also, the number of on-to-off transitions of channel A and channel B will be counted. Figure 4 depicts the operation of the X4 Mode.

3.2.4 JUMPER WIRING FOR A QUADRATURE TYPE ENCODER

X1 MODE: Jumper Pin 1 to Pin P.

X2 MODE: Jumper Pin 13 to Pin A.

X4 MODE: No jumpers required.

4.0 ADDRESSING

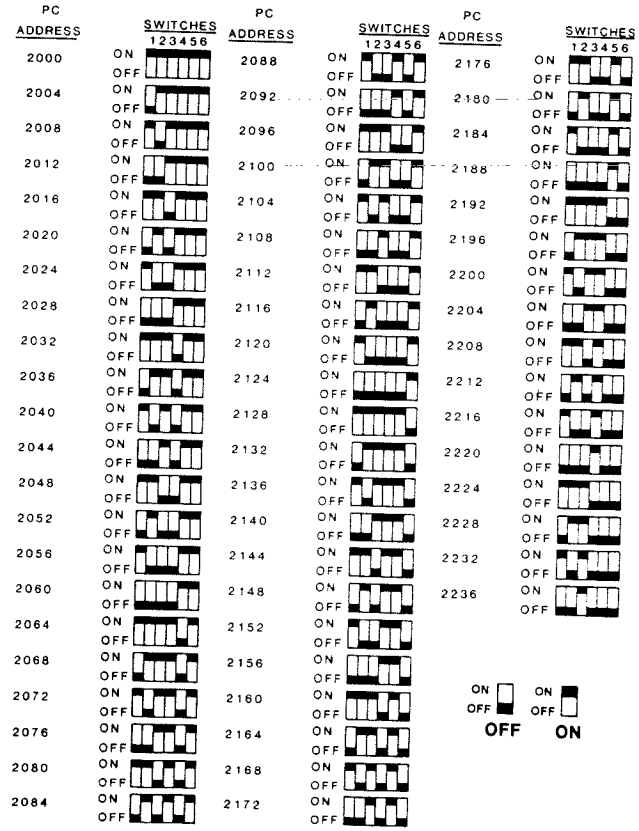

TABLE 1. ADDRESS SWITCH SETTINGS

ENCODER MODULE

The Encoder Module occupies four memory locations. The eight board-mounted Address Switches must be set for the lowest of the four addresses desired. Table 1 contains the Address Switch settings for the 60 possible beginning address points. Switches 7 and 8 are not used and may be ignored.

5.0 HARDWARE INTERFACING

The Encoder Module interfaces with an encoder through a 36-pin card edge connector. The type of driver on the encoder determines how the encoder will be connected. Figure 5 shows the card edge connections corresponding to an encoder with a single-ended driver, an encoder with a differential current driver, and an encoder with a differential voltage driver. Section 5.4 lists typical drivers used in specific applications.

NOTE

In addition to the card edge wiring shown in Figure 5, jumpers corresponding to the type of encoder, pulse or quadrature, must be inserted. Section 3.1.1 specifies jumper placement for pulse type encoder. Section 3.2.4 specifies jumper placement for quadrature type encoders.

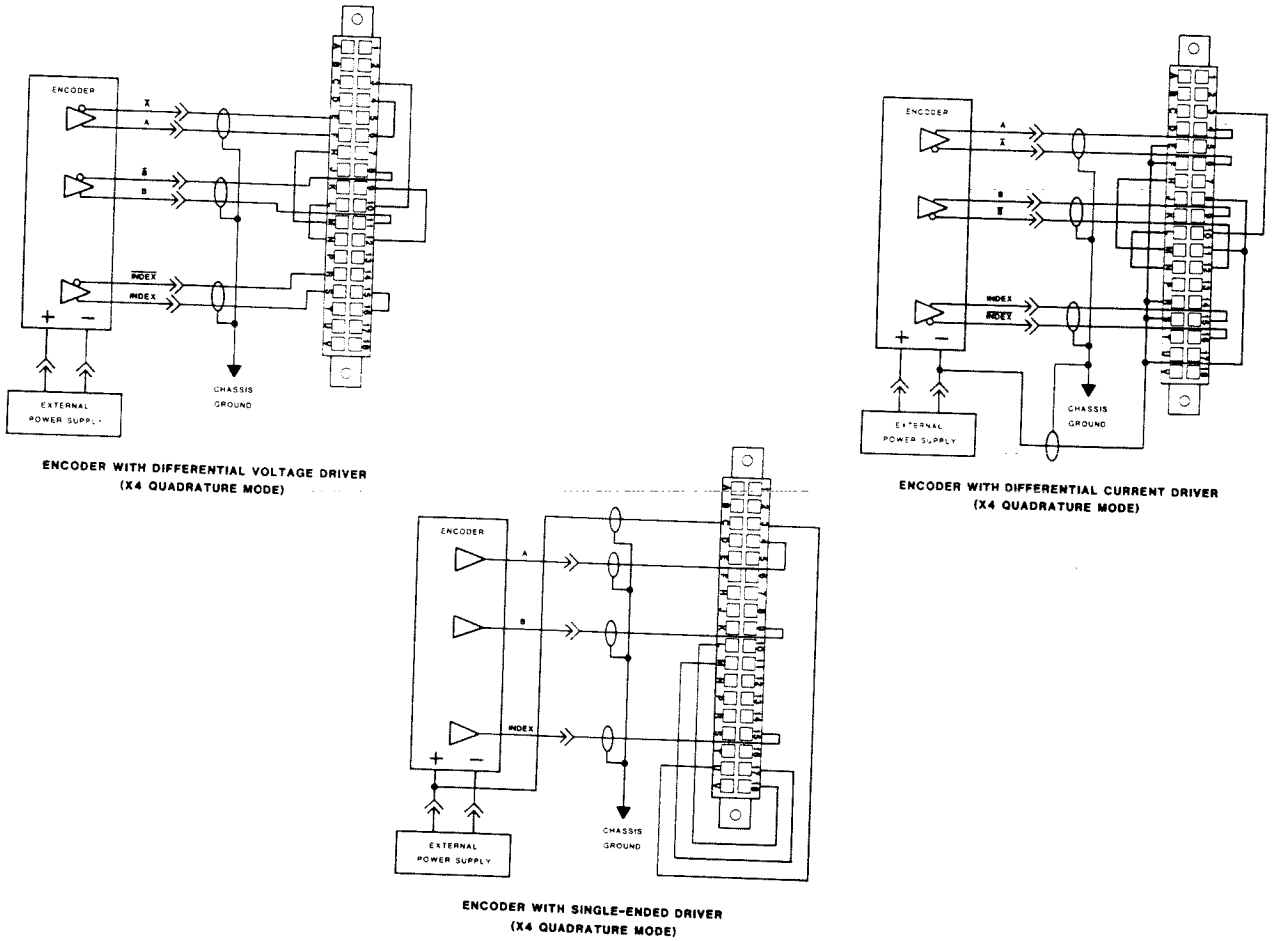

FIGURE 5. CARD EDGE CONNECTOR WIRING

5.1 REVERSING CHANNEL POLARITY

In reference to an encoder with a differential driver, a clockwise rotation of the encoder normally causes the 16-bit counter to count up. A clockwise rotation can make the counter count down if the polarity of channel A or channel B (not both) is reversed. The polarity of a channel can be reversed by exchanging the connections of the non-inverted signal wire and the inverted signal wire of the same channel (i.e. A exchanged with $\overline{A}$ or B exchanged with $\overline{B}$).

5.2 REVERSING INDEX POLARITY

When the polarity of index is reversed, index position as indicated by a logic 0, rather than a logic 1. The polarity of index can be reversed for an encoder with differential voltage or current driver by jumpering pin K to pin 3 rather than pin 10 to pin 3. The polarity of index can be reversed for an encoder with a single - ended driver by jumpering pin 7 to pin 3 instead of pin U to pin 3.

5.3 CURRENT LIMITS

IMPORTANT

Information received by the Encoder Module is optically isolated. The optical isolator can tolerate a maximum current of 60 mA. If the encoder can supply more than 60 mA to the Encoder Module, a resistor must be placed in series to limit current to 60 mA or less.

5.3.1 SINGLE-ENDED DRIVER ENCODER

When an encoder with a single-ended driver is used, pull-up resistors must be connected to the appropriate sockets on the Encoder Module to keep the signal current within the module limits. The current must be kept between 10 mA (the minimum required for the module to operate correctly) and 60 mA (the maximum value the optical isolators on the module can accomodate). The following formula is used to figure the proper pull-up resistor value:

$$60 \text{ mA} > (Es - 2.5)/Rx \geq 10 \text{ mA}$$

Es is the voltage of the external power supply. 2.5 is a constant reflecting the voltage drop inherent in the module design. Rx is the value of the pull-up resistor.

5.3.2 DIFFERENTIAL DRIVER ENCODER

When an encoder with a differential driver is used, the signal current from the encoder must be between 10 mA and 60 mA. The signal current for typical differential drivers is well within this limit. However, when signal current can exceed 60 mA, the current must be limited. This is accomplished by connecting a resistor in series with one of the two connecting wires from channel A (A or $\overline{A}$), channel B (B or $\overline{B}$), and Index (Index or $\overline{\text{Index}}$). Channel A, channel B, and Index should all have a limiting resistor of equal value in one of the wires connecting them to the Encoder Module. The resistance required is dependent on the output level of the encoder being used.

5.4 TYPICAL DRIVERS

The following is a partial listing of typical drivers used in the various encoder applications:

Typical Differential Current Driver: 75110.

Typical Differential Voltage Drivers: 75183, 8830, 75114, 9614, 7513.

Typical Single-Ended Driver: 7406.

6.0 INSTALLATION

The Encoder Module must be installed in the Master Rack. The rack is physically keyed to prevent modules from being inserted incorrectly. Set the Address Switches per the instructions in Section 4.0. Fasten the front edge connector before applying power.

IMPORTANT

ENSURE THAT POWER TO THE CARD RACK IS OFF BEFORE INSERTING OR REMOVING THIS OR ANY MICRO-COMPUTER MODULE. Failure to do so may result in permanent damage to the module.

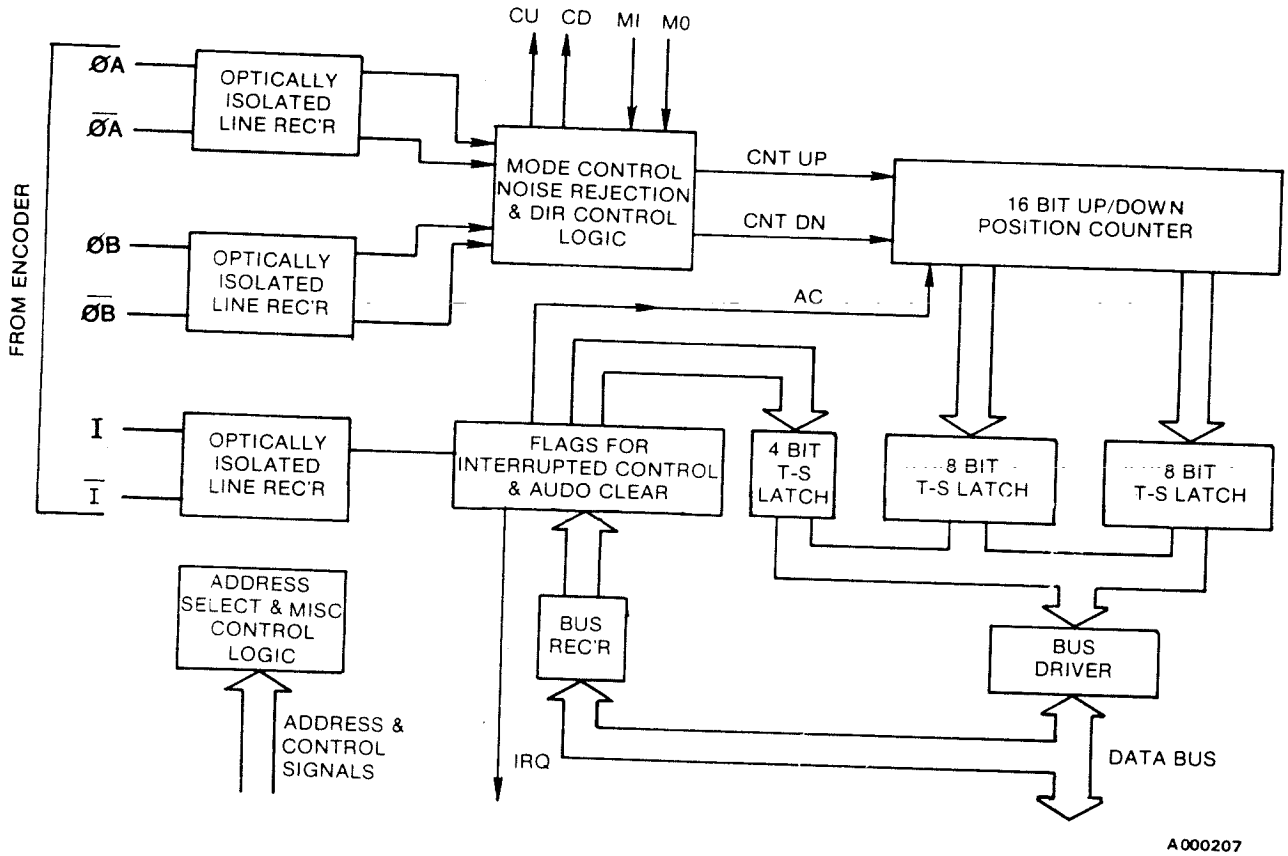

FIGURE 6. BLOCK DIAGRAM

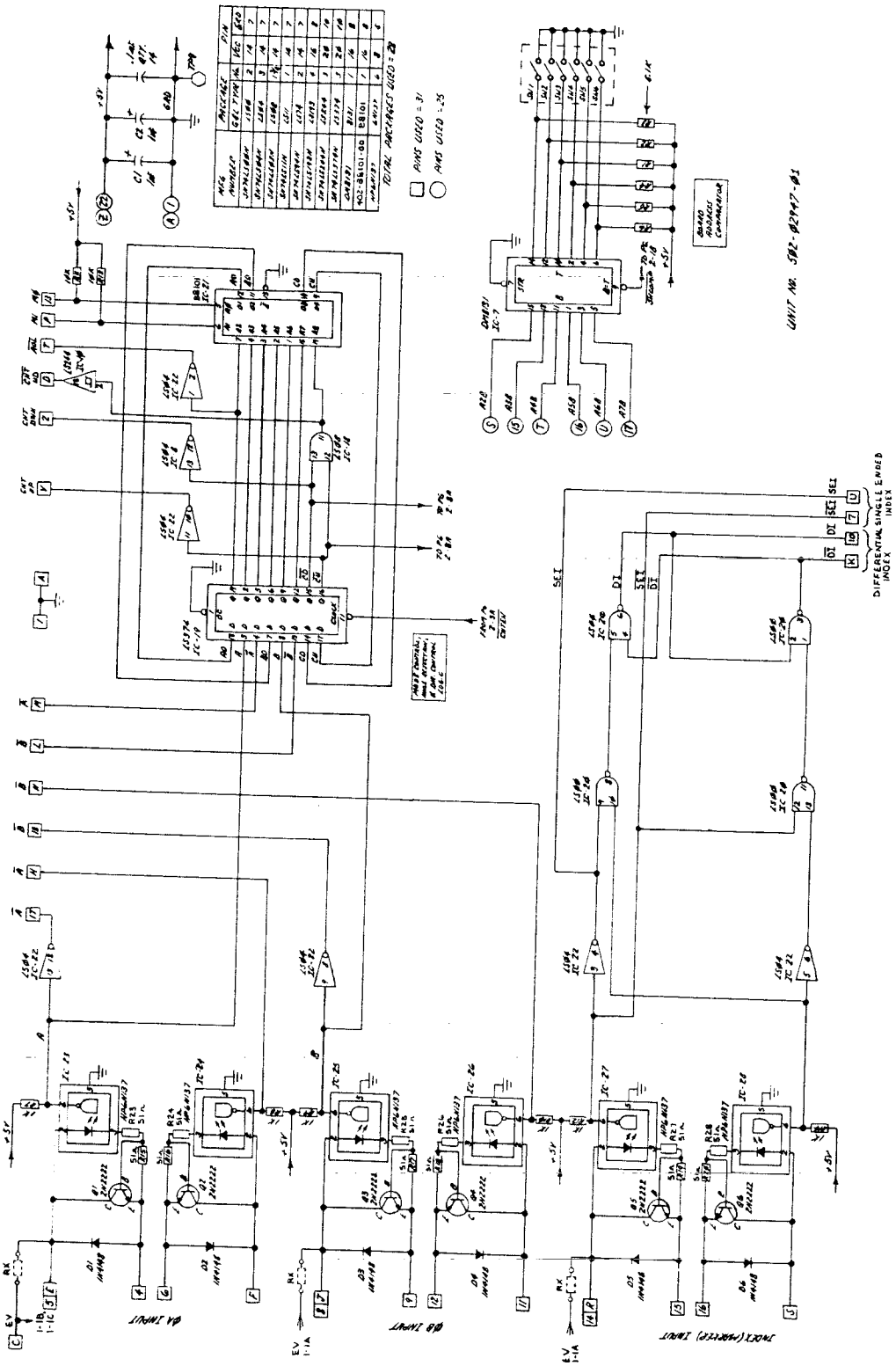

FIGURE 7. MODULE SCHEMATIC

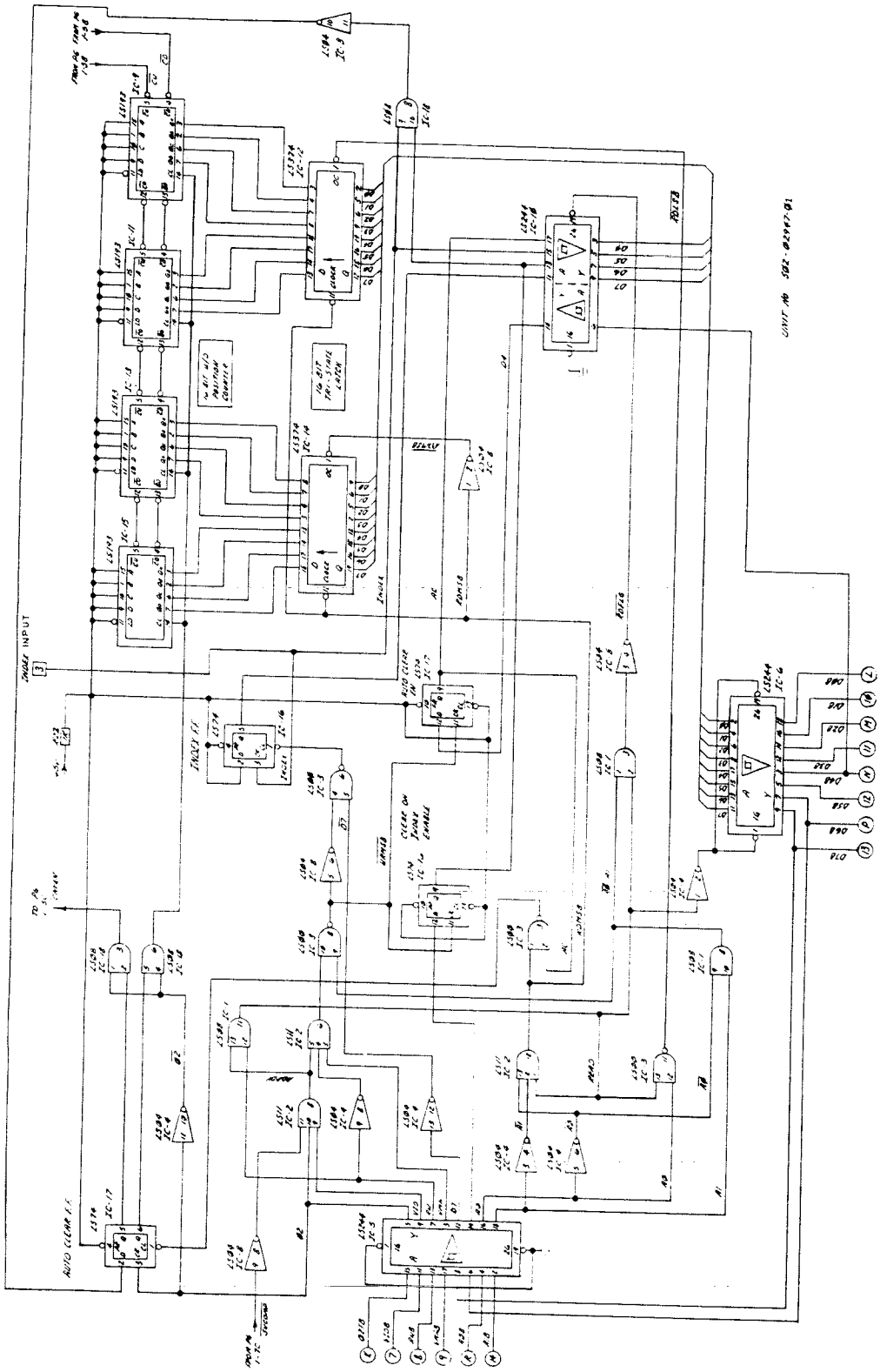

FIGURE 7. MODULE SCHEMATIC

HIGH-SPEED ENCODER MODULE

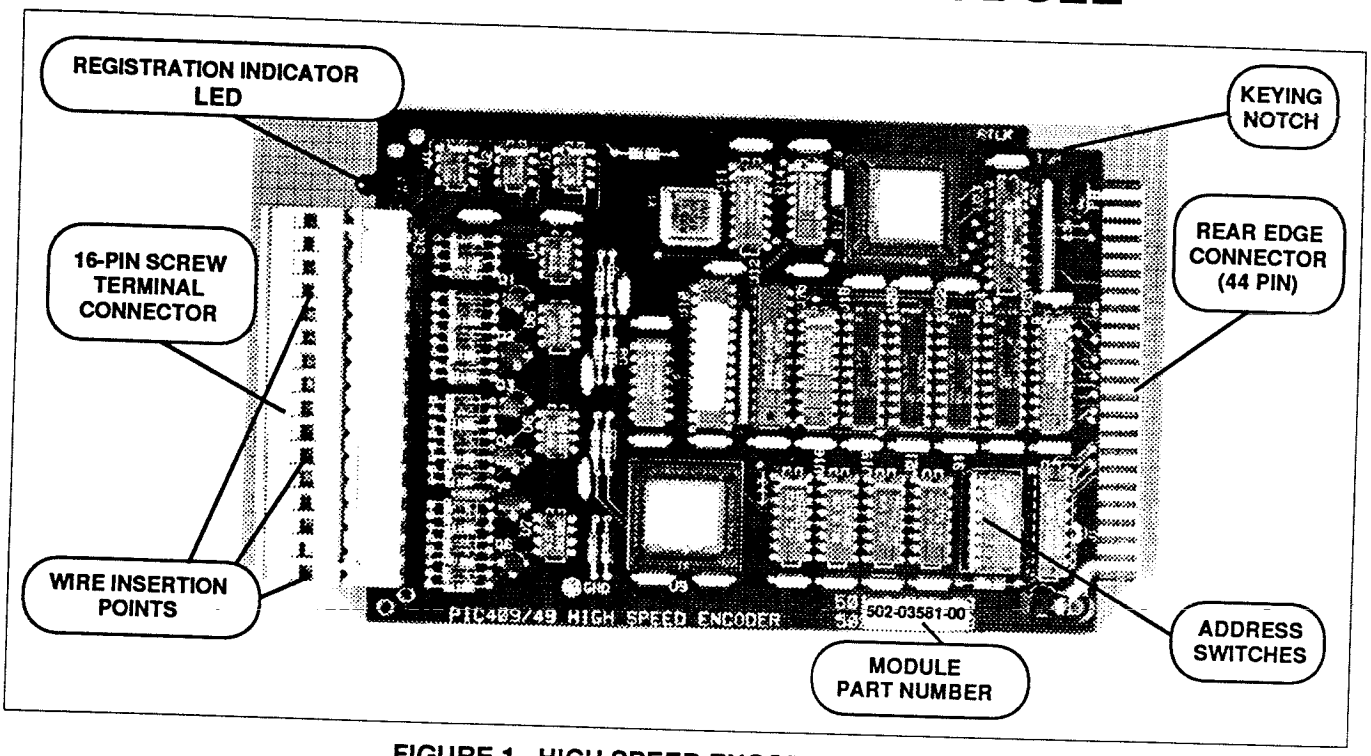

FIGURE 1. HIGH SPEED ENCODER MODULE

1.0 INTRODUCTION

The High-Speed Encoder Module, part number 502-03581-00, contains circuitry to convert feedback signals from an incremental encoder into binary values. Incremental encoders are position measurement transducers that typically provide position information in a square wave format.

Encoder signals that are in a sine wave format must be shaped into a square wave format before being fed into the High-Speed Encoder Module.

The maximum input frequency is 250 KHz. There is a maximum counter frequency of 1 MHz when operating the module in the X4 mode.

With the High-Speed Encoder Module, a position can be latched based on a registration input.

2.0 PIN CONNECTIONS

Encoders are connected to the High-Speed Encoder Module through a 16-pin screw terminal plug-in connector, part number 401-53820-00, which is attached to the module. (See figure 1 above.) Connecting wires are inserted on the right hand side. Figure 2 lists the pin connections for each of the 16 screw connections.

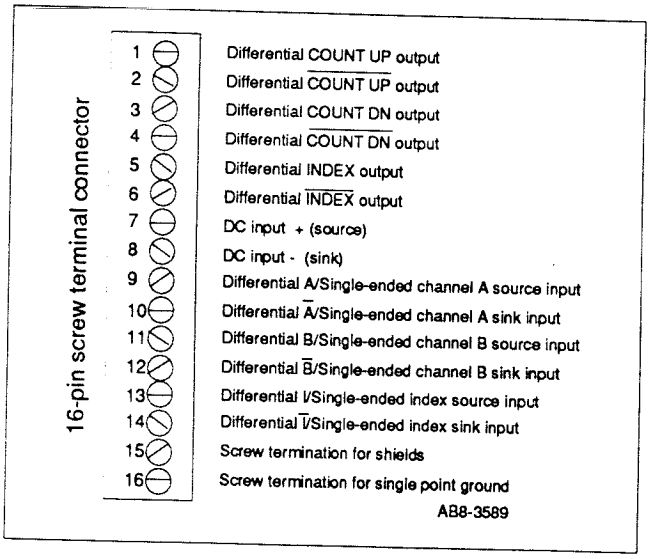

FIGURE 2. 16-PIN CONNECTIONS

The first six pins are outputs to be used with the Digital Cam Output Module only. Twisted pair wires should be used for these interconnections and 100 ohm resistors should be used to terminate each end of the twisted pair. For further information, refer to the Digital Cam Output Module write-up.

Pins 7 and 8 are used for a switched DC input when using registration. (See section 5.3.) The pins must be wired according to the polarity shown (+ on pin 7, - on pin 8).

The remaining pins are used for receiving signals from an encoder. For the best noise immunity, the encoder should have differential outputs for its channel A, channel B, and index signals.

If an encoder with single-ended outputs is used, the connections depend upon the driver. With a TTL or open-collector driver, the encoder outputs A, B, and I should be connected to pins 10, 12, and 14 respectively. The 5V side of the encoder's power supply should be connected to pins 9, 11, and 13. (Shown in figure 6.) With a low impedence source driver, encoder outputs A, B, and I, should be wired to pins 9, 11, and 13 respectively. Pins 10, 12, and 14 should be connected to the 0 V line of the encoder's power supply.

Pins 9 & 10, 11& 12, and 13 & 14 are input pairs. They each have the following characteristics:

Maximum voltage to turn on=3.2VDC @ 6mA
Maximum voltage allowed = 30VDC
Internally, current limited to 14mA (typical)

Pins 15 and 16 are shield termination pins and are internally connected. (See the High-Speed Encoder Module schematic in figure 9.) They provide a location for connecting the shields of the cables from the encoder. One of these pins should be connected to the system's single point ground or chassis ground. It is recommended that pin 16 be connected to single point ground.

3.0 COUNTER

Square waves from the encoder are recorded by a 16-bit up/down counter. If the encoder is properly phased, a square wave that corresponds to the positive rotation of the encoder will cause the counter to increment. A square wave that corresponds to the negative rotation of the encoder will cause the counter to decrement.

Encoder Call Routines are available that monitor and manipulate the counter.

4.0 INCREMENTAL ENCODER SELECTION

Incremental encoders have three channels, channel A, channel B, and index. For encoders with differential drivers, each channel has two outputs which form a sink/source pair. The High-Speed Encoder Module will compare the outputs to ensure the validity of the signals. A signal is recognized as valid only when one output is sourcing and the other output is sinking current. When the signal logic level changes, the output polarity changes. Loss of feedback (LOFB) detection is possible with differential encoders.

For encoders with single-ended drivers, each channel has only one output with respect to 0V. Single-ended drivers do not have the noise immunity advantages obtained with differential drivers. Therefore, incremental encoders with single-ended drivers are not recommended for transmission beyond 10 feet.

NOTE

The use of encoders with differential drivers is strongly recommended in all applications.

Feedback signals from either pulse or quadrature type incremental encoders may be monitored by the High-Speed Encoder Module.

4.1 PULSE INCREMENTAL ENCODER

Figure 3 depicts the channel A (the positive rotation channel), channel B (the negative rotation channel), and index signals of a pulse type encoder. When the encoder shaft rotates in a positive direction as shown, a continuous pulse train is present on channel A and no signal (a logic 0) is present on channel B. When the encoder shaft rotates in a negative direction, a continuous pulse train is present on channel B. When the encoder shaft is stationary, no pulse train is present on either channel. A pulse is present on the index output once per revolution of the encoder.

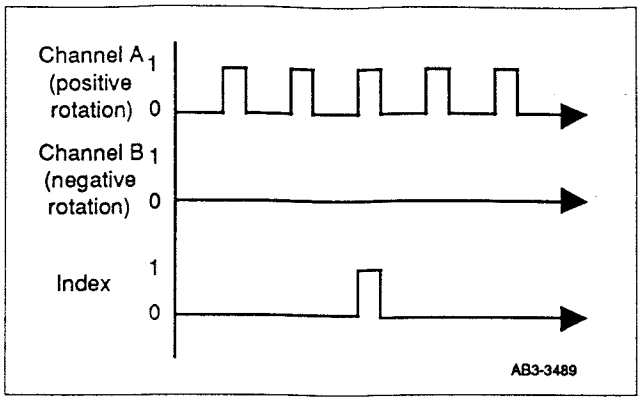

FIGURE 3. PULSE ENCODER SIGNALS

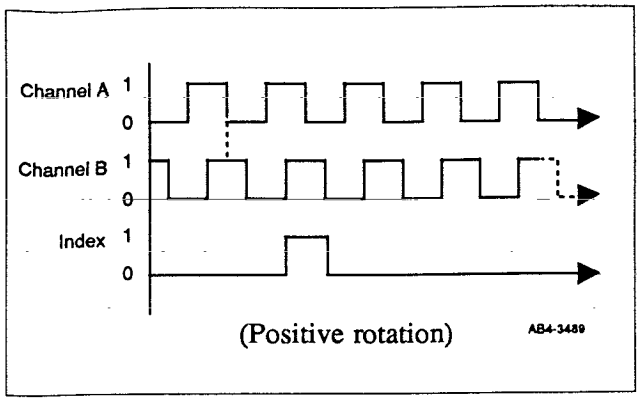

FIGURE 4. QUADRATURE ENCODER SIGNALS

The frequency of channel A and channel B varies according to the resolution (pulses/revolution) and the speed (revolutions/second) of the encoder. For example, if an encoder has a resolution of 2,000 pulses/revolution and the shaft is being rotated at 10 revolutions/second, the frequency of the input to the High-Speed Encoder Module will be 20,000 pulses/second.

The maximum input frequency that can be accommodated by the High-Speed Encoder Module from a pulse type encoder is 250,000 pulses/second. The width of the pulse must be greater than 500 nanoseconds. (.5 µsec)

4.2 QUADRATURE INCREMENTAL ENCODER

Figure 4 depicts channel A, channel B, and index outputs of a quadrature type encoder. A continuous square wave signal is present on channel A and channel B whenever the encoder shaft rotates at a constant speed. Channel A leads channel B by 90 degrees (±45°) when the encoder shaft rotates in the positive direction. Channel A lags channel B by 90 degrees (±45°) when the encoder shaft rotates in the negative direction. An on-off signal is present on the index output once per revolution of the encoder. Figure 4 depicts a quadrature type encoder that is rotating in a positive direction.

The frequency of channel A and channel B varies according to the resolution (lines/revolution) and the speed (revolutions/second) of the encoder. For example, if an encoder has a resolution of 2,000 lines/revolution and the shaft is being rotated at 10 revolutions/second, the frequency of the input to the High-Speed Encoder Module is 20,000 lines/second.

The maximum input frequency is 250KHz. The maximum counter frequency that can be accommodated by the High-Speed Encoder Module from a quadrature type encoder is:

MODE	MAXIMUM COUNTER FREQUENCY
X1	250,000
X2	500,000
X4	1,000,000

The High-Speed Encoder Module must be placed in either the X1, X2, or X4 mode when used to monitor a quadrature type incremental encoder. The desired mode is selected via software.

Figure 5 illustrates the X1, X2, and X4 modes for quadrature encoders.

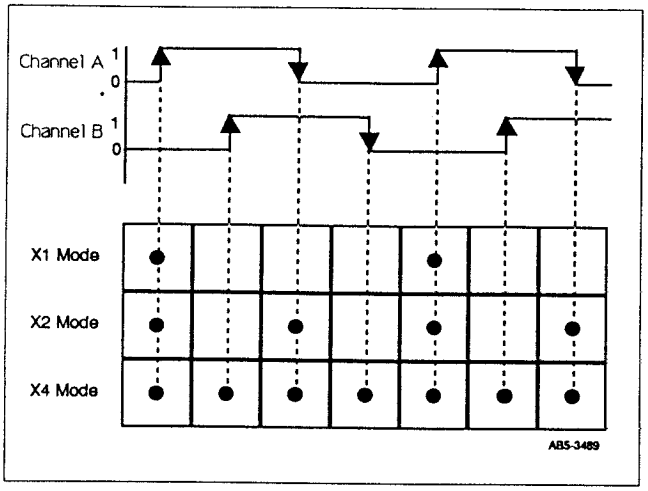

FIGURE 5. QUADRATURE MODES

X1 MODE

In the X1 mode, the counts/revolution of the encoder is equal to the lines/revolution of the encoder. The counter on the High-Speed Encoder Module will count the number of off-to-on transitions of channel A.

X2 MODE

In the X2 mode, the counts/revolution of the encoder is equal to the lines/revolution of the encoder times two. The counter on the High-Speed Encoder Module will count the number of off-to-on and on-to-off transitions of channel A.

X4 MODE

In the X4 mode, the counts/revolution of the encoder is equal to the lines/revolution of the encoder times four. The counter on the High-Speed Encoder Module will count the number of off-to-on transitions of both channel A and channel B and the number of on-to-off transitions of both channel A and channel B.

5.0 ADDRESSING

The High-Speed Encoder Module occupies four memory locations. The eight board-mounted address switches must be set for the lowest of the four addresses desired. Table 1 contains the address switch settings for the 60 possible beginning address points. Switches seven and eight are not used and may be ignored.

When using Software Solutions, only the addresses within the dashed box in table 1 are available.

IMPORTANT

Always check the module switches to be sure you know which position is off and which position is on before setting the address.

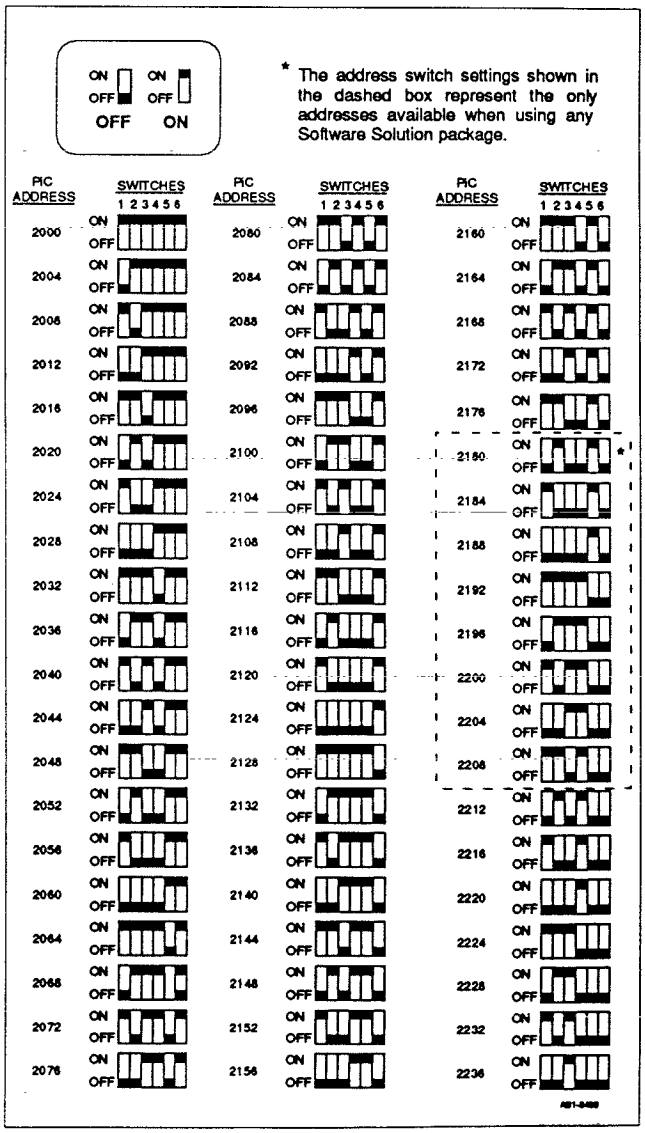

TABLE 1. ADDRESS SWITCH SETTINGS

6.0 HARDWARE INTERFACING

The High-Speed Encoder Module interfaces with an encoder through a 16-pin connector. The type of driver on the encoder determines how the encoder will be connected. Figure 6 shows the connections corresponding to an encoder with a single-ended driver and an encoder with a differential voltage driver.

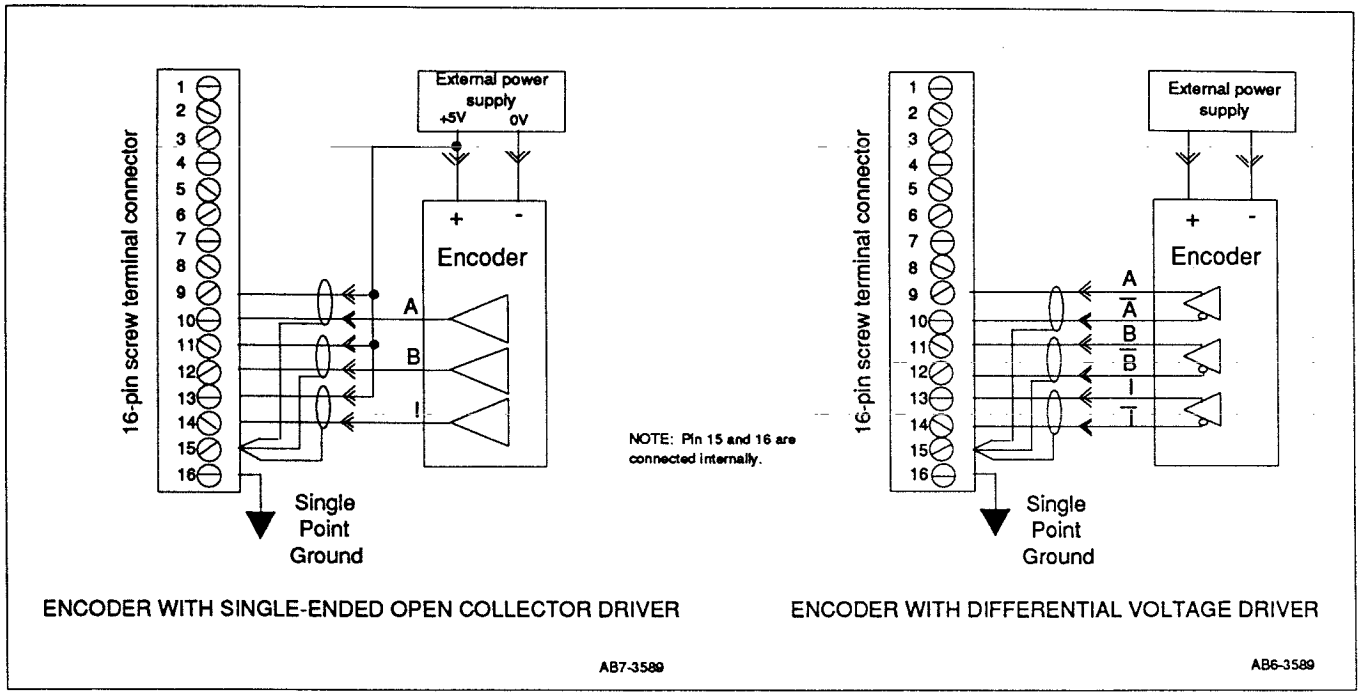

FIGURE 6. 16-PIN CONNECTIONS WITH SINGLE-ENDED AND DIFFERENTIAL DRIVERS

Typical drivers used in various encoder applications include:

Drivers	Types
Differential voltage	75183 8830 75114 9614 7513
Single-ended open collector	7406

6.1 DIRECTION SENSE

The direction of a differential encoder can be reversed by exchanging A and A\ with B and B\.

The direction of a single-ended encoder can be reversed by exchanging A with B.

6.2 INDEX POLARITY

The High-Speed Encoder Module utilizes the positive edge of an index signal rather than utilizing the logic level. Because of this, an encoder can indicate the presence of an index marker with either a logic 1 or a logic 0 signal. There is no need to reverse index polarity.

6.3 DC INPUT (USED WITH REGISTRATION)

With the High-Speed Encoder Module, the user has the capability of latching a position based on a registration input to the DCIN+ and DCIN- connections (pins 7 and 8 in figure 2). The selection of the registration mode is

done in software. An external registration switch is connected to pins 7 and 8. (See the block diagram in figure 8.)

The DCIN characteristics are listed below.

Maximum voltage (guaranteed on)	14VDC
Minimum voltage (guaranteed off)	5VDC
Maximum voltage allowed	30VDC
Typical input impedance	2.7K

The optically isolated DC input circuit has a maximum on/off time of 50 microseconds. Because of this fast response time, special care should be taken in routing external wires to it to provide noise immunity. As shown in figure 7, it is recommended that shielded twisted pair wiring be used.

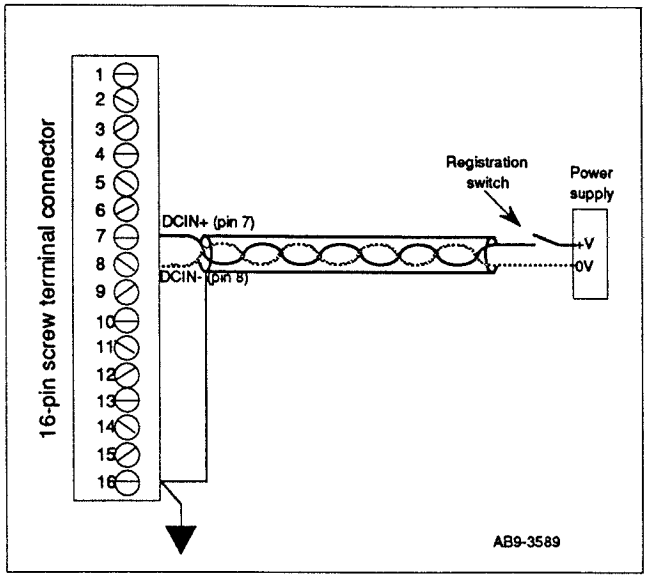

FIGURE 7. DCIN CONNECTION USING TWISTED PAIR WIRING

Figure 8 shows a block diagram of the High-Speed Encoder Module.

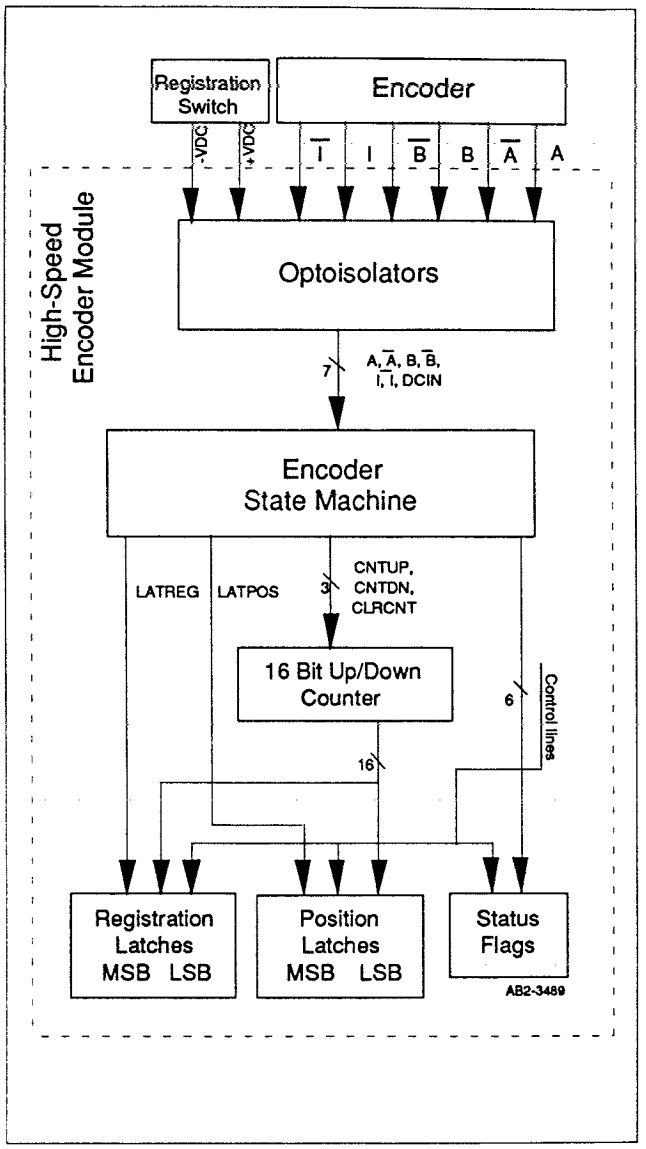

FIGURE 8. BLOCK DIAGRAM

7.0 INSTALLATION IN RACK

The High-Speed Encoder Module must be installed in the Master Rack of the PiC. The rack is physically keyed to prevent modules from being inserted incorrectly. Set the address switches. (See section 4.0.) Make the necessary connections to the 16-pin connector before applying power.

IMPORTANT

Ensure that power to the rack is off before inserting or removing this or any micro-computer module. Failure to do so may result in permanent damage to the module.

The High-Speed Encoder Module schematic is shown in figure 9.

HIGH-SPEED ENCODER MODULE

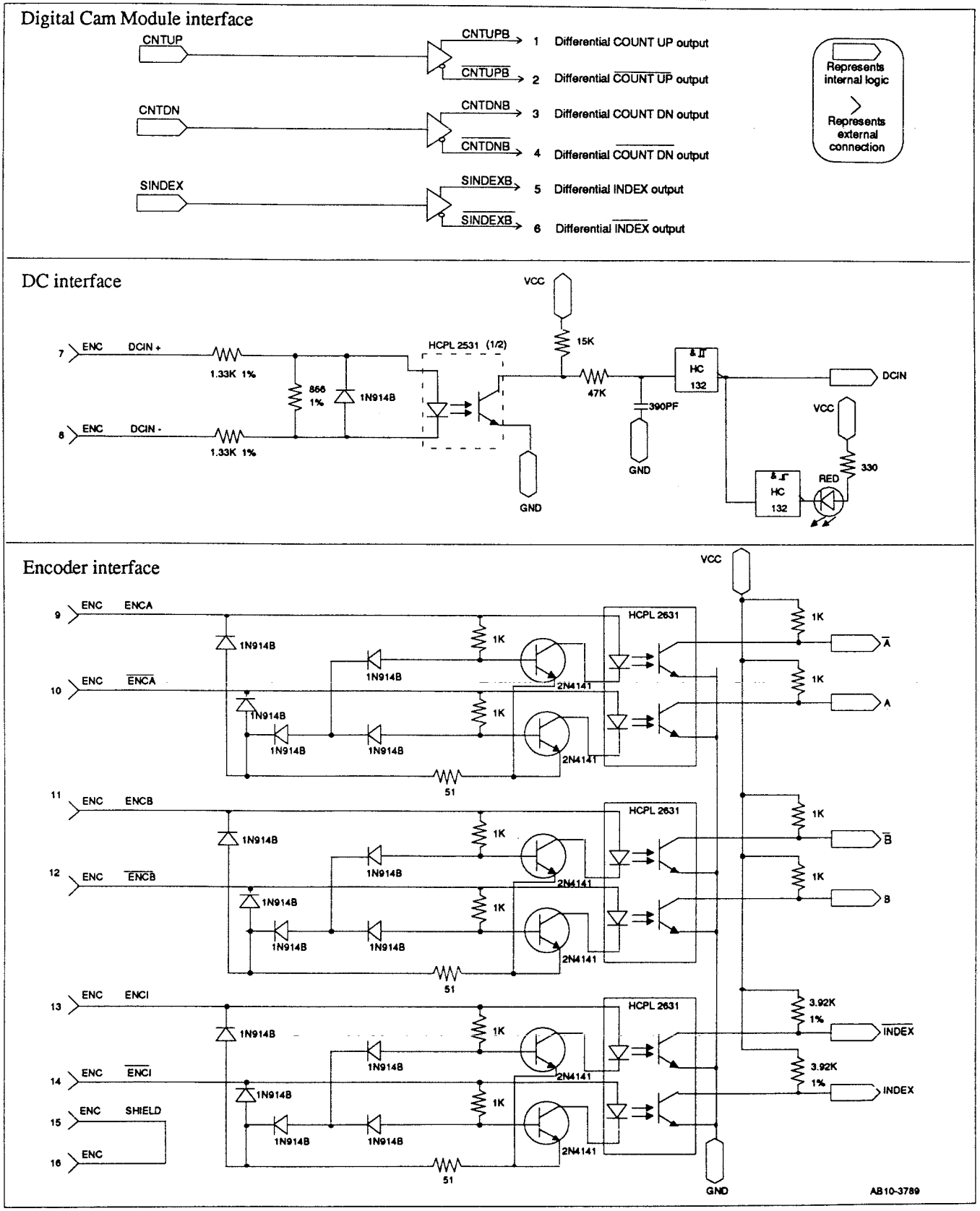

FIGURE 9. HIGH SPEED ENCODER MODULE SCHEMATIC

DATA ACQUISITION MODULE

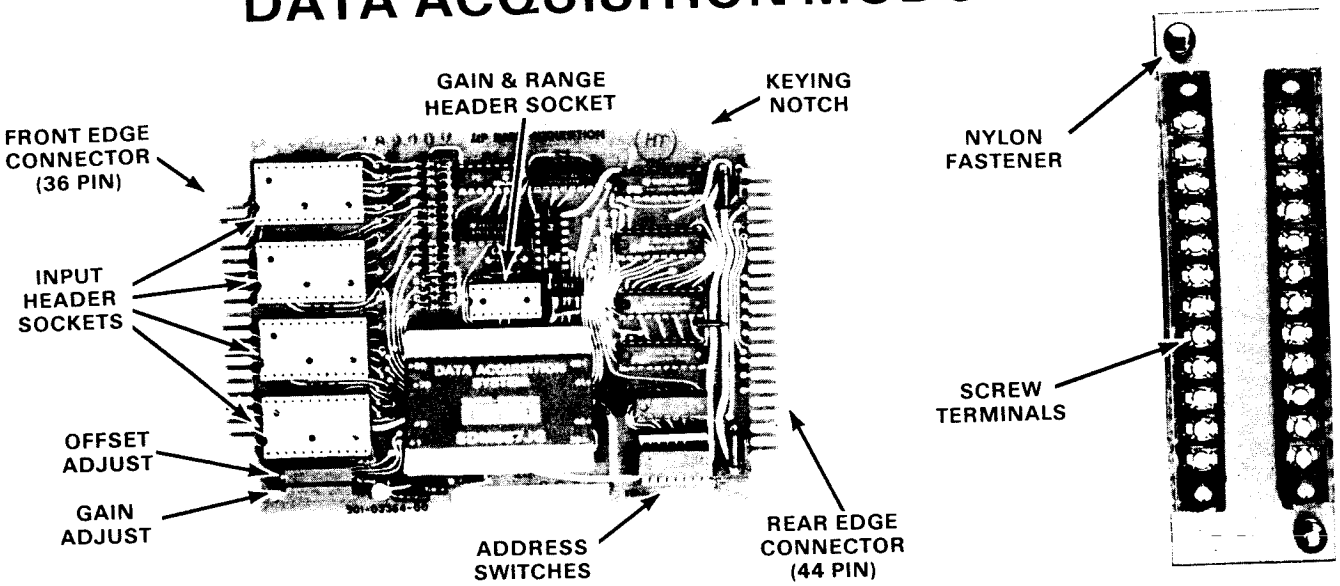

FIGURE 1. DATA ACQUISITION MODULE & OPTIONAL FACEPLATE

1.0 INTRODUCTION

Each Data Acquisition Module (part number 502-02907-20) converts eight analog input levels to digital format for processing by the CPU. Gain control and voltage scaling capabilities enable the module to accept a wide range of analog input levels. The Data Acquisition Module is capable of accepting negative and positive input signals. The presence of the maximum negative input signal results in -2,048 counts, while the presence of the maximum positive input signal results in +2,047 counts. Contained in the module are a socket for gain and range select components, sockets for headers with input conditioning components, a twelve-bit data acquisition device with built-in A/D converter and multiplexing circuitry, and gain and offset potentiometers. Current variations may be used as the input signal through the use of current to voltage conversion components, allowing the use of a 20mA loop standard, for example.

2.0 ADDRESSING

Each Data Acquisition Module occupies four memory locations. The first six Address Switches must be set for the lowest of the four addresses desired. Table 1 contains the Address Switch settings for the 60 possible beginning address points. Data Acquisition Modules may only be installed in the Master Rack.

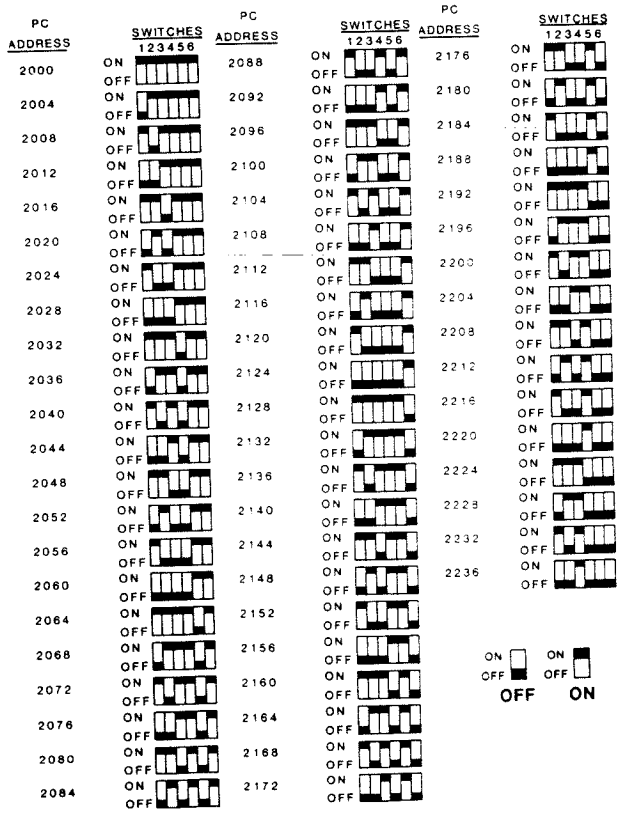

TABLE 1. ADDRESS SWITCH SETTINGS

3.0 SELECTION OF INPUT SIGNAL LEVELS

The key to successful use of the Data Acquisition Module is to keep in mind that the Burr-Brown SDM-857 contains an A/D converter that is internally preceded by an Instrumentation Amplifier (IA) with a minimum gain of two. The output of the IA serves as the input to the A/D converter. Thus, the effect of the IA gain on the input signal to the module must be considered when determining the level of input signal to the A/D converter.

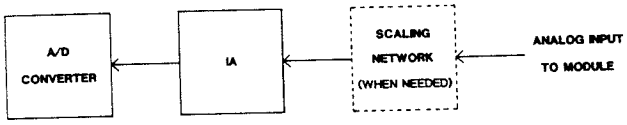

NOTE

For maximum feedback accuracy, precision resistors (±.1%) with a minimum temperature coefficient (<100 PPM/degree C) should be used when configuring the Data Acquisition Module.

3.1 GAIN AND RANGE HEADER SOCKET

The Gain and Range Header Socket on the Data Acquisition Module accepts a 16-pin header plug (G&L Part No. 401-50463-00). The user is able to control gain and range values by connecting appropriate components to the header plug.

3.2 RANGE SELECTION

The A/D converter contained in the Burr-Brown SDM-857 can be configured for a range of either ±5V (10V total) or ±10V (20V total). The ±5V range is selected by jumpering pins 4 and 13 of the Gain and Range Header plug (see Figure 2). The ±10V range is selected by jumpering pins 5 and 12. Whichever range is selected for the A/D converter, the maximum output signal from the IA should equal the extreme limit of the selected A/D input range. Adjustment of the IA output level is done through gain selection and voltage scaling.

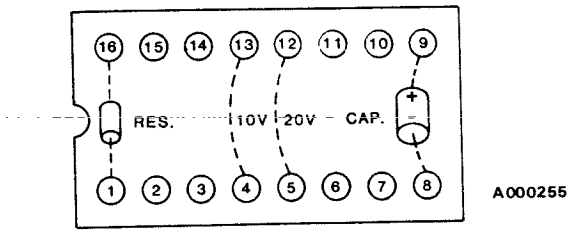

FIGURE 2. GAIN AND RANGE HEADER WIRING

3.3 GAIN SELECTION

The Instrumentation Amplifier (IA) internally precedes the A/D converter in the Burr-Brown SDM857. The IA has a minimum gain of 2, but the gain is user-variable through the installation of a resistor of the appropriate value. Theoretically, the top IA gain is 500. In actual use, the influence of electrical noise in the environment makes a top IA gain of 200 a more realistic value.

The IA gain is increased when the maximum output of the IA (2x the maximum input to module) is less than the limit of the input range for the A/D converter. The necessary gain can be found by using the following formula:

$$\text{Gain} = \frac{A/Dr(max)}{Vin(max)}$$

A/Dr(max) is the upper limit of the A/D converter range and Vin(max) is the upper limit of the input signal to the module (in volts).

For example, if the selected A/D converter range is ±5V, and the input signal is ±1.5V, the factory adjusted IA gain of 2 will not be adequate. The input signal must be amplified so its range limits are equal to the range limits of the A/D converter. Dividing 1.5 into 5 results in a required gain of 3.33. The resistor value necessary to obtain the correct gain is found with

the following formula:

$$R_{ext.} = 20K/(Gain-2)$$

20K is a constant that reflects the resistance value inherent in the design of the Data Acquisition Module. In this example, Rext = 20,000/(3.33-2); or approximately 15K ohms. The resistor is connected across pins 1 and 16 of the Gain and Range Header plug as shown in Figure 2.

If the minimum gain of 2 is desired, pins 1 and 16 are left open.

3.3.1 IA Settling Time Adjustment

When a gain of 10 or greater is desired, a capacitor must be added to the circuit to permit an increased IA settling time. Capacitor location is shown in Figure 2. The following chart shows the capacitor size necessary with various gain values:

IA GAIN	CAPACITOR SIZE
10-49	.001 uF
50-100	.0022 uF
101-500	.01 uF

3.4 INPUT HEADER SOCKETS

The four input header sockets on the Data Acquisition Module accept 24-pin header plugs (G&L Part No. 401-50211-00). The user connects appropriate components to the plugs to condition the input signal. Each socket allows the user to condition two inputs. All four sockets are identical in configuration. Table 2 shows socket pin utilization.

3.5 SCALING NETWORK

The effect of minimum IA gain on the input signal may result in a signal that exceeds the selected A/D converter range. In such cases, the input signal must be scaled down. This is accomplished by inserting a header plug containing appropriate components into the proper input header socket. A voltage scaling network is formed with resistors as shown in Figure 3. The equations used to calculate the proper resistor values are as follows:

Channel	Module Pin	Header Pin	Socket
0IN	18	1	4
0RTN	17	2	4
1IN	15	12	4
1RTN	16	11	4
2IN	13	1	3
2RTN	12	2	3
3IN	10	12	3
3RTN	11	11	3
4IN	8	1	2
4RTN	7	2	2
5IN	5	12	2
5RTN	6	11	2
6IN	4	1	1
6RTN	3	2	1
7IN	1	12	1
7RTN	2	11	1

TABLE 2. SOCKET PIN UTILIZATION

$$R2 = \frac{A/Dr(max)}{2Iin(max)}$$

$$R1 = \frac{2Vin(max)R2}{A/Dr(max)} - R2$$

A/Dr(max) is the upper limit of the selected A/D range in volts. The 2 reflects the minimum IA gain. Iin(max) is the maximum input current in amperes. Vin(max) is the maximum input signal in volts.

For example, assume a user-supplied power supply is used that provides 12 mA at ±15V. Using the ±10V A/D converter range, R2 = 10V/(2 x .012), or 417 ohms. R1 = [(2 x 15V x 417 ohms)/10V]-417 ohms, or 834 ohms.

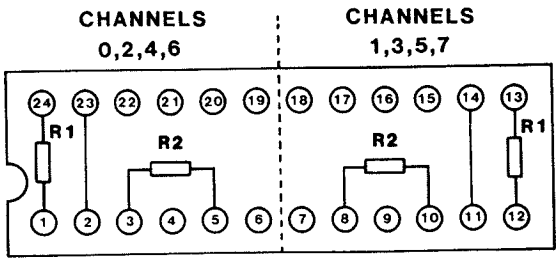

FIGURE 3. INPUT SIGNAL SCALING

NOTE

If input scaling is not desired, replace R1 with a wire jumper and eliminate R2.

4.0 AUXILIARY USE OF INPUT HEADERS

4.1 CURRENT TO VOLTAGE CONVERSION

Current variations can be used as the input to the Data Acquisition Module by configuring the proper input header plug to accomplish current to voltage conversion. This operation is illustrated in Figure 4. The following formula determines the correct value for the resistor Rs:

$$Rs = \frac{A/Dr(max)}{2\ Iin(max)}$$

A/Dr(max) is the upper limit of the selected A/D range. The 2 reflects the default IA gain. Iin(max) is the maximum input current (in amperes). For example, with a selected A/D range of ±5V, and a maximum input current of 25 mA, Rs = 5/(2 x .025) or 100 ohms.

4.2 INPUT SIGNAL FILTERING

If it is desired that the input signal be filtered, a low-pass filter can be utilized through the use of a header plug containing an appropriate capacitor as shown in Figure 5. The formula for determining the proper value of capacitor is:

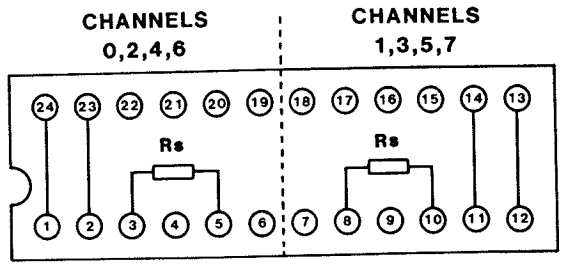

FIGURE 4. CURRENT TO VOLTAGE CONVERSION

$$C = \frac{1}{2\ \pi\ FR}$$

F is the frequency above which all other frequencies will be attenuated and R equals 20,000, which is a constant that reflects the resistance value inherent in the design of the module.

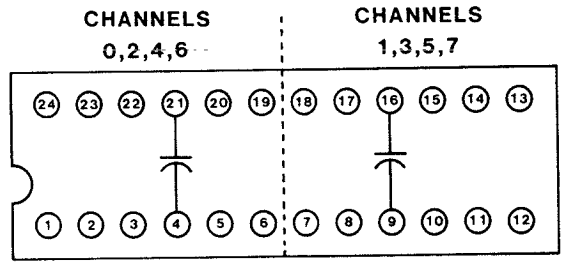

FIGURE 5. FILTERING CAPACITOR

5.0 HARDWARE INTERFACING

5.1 CARD EDGE CONNECTOR

A 36-pin card edge connector may be used to connect the Data Acquisition Module to external devices. Phosphor-bronze crimp contacts with gold-over-nickel plating are available. Dummy contacts may be inserted into the connector at unused places for better holding power.

5.2 FACEPLATE CONNECTOR

The Faceplate Connector allows wiring connections to be conveniently made to compression screw terminals.

DATA ACQUISITION MODULE

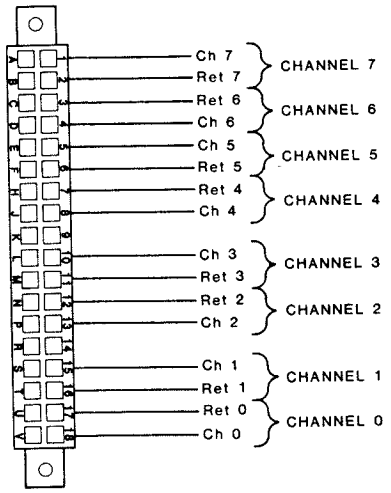

FIGURE 6. CARD EDGE CONNECTOR WIRING

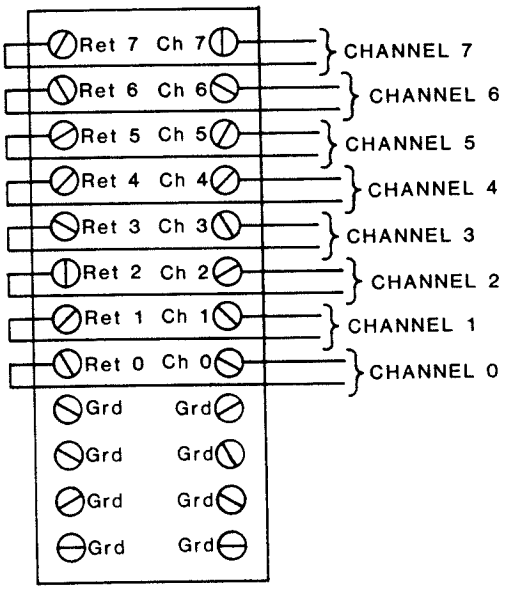

FIGURE 7. FACEPLATE WIRING

5.3 UNUSED INPUTS

Unused inputs should be connected to analog ground on the same module as shown in Table 3.

6.0 INSTALLATION

The Data Acquisition Module may only be installed in the Master Rack. Expansion Racks are used for AC and DC Input/Output modules.

The rack is physically keyed to prevent modules from being inserted incorrectly.

Input	Connect	Socket
0	4 to 22	4
1	16 to 17	4
2	4 to 22	3
3	16 to 17	3
4	4 to 22	2
5	16 to 17	2
6	4 to 22	1
7	16 to 17	1

Return	Connect	Socket
0	21 to 20	4
1	9 to 15	4
2	21 to 20	3
3	9 to 15	3
4	21 to 20	2
5	9 to 15	2
6	21 to 20	1
7	9 to 15	1

TABLE 3. ANALOG GROUND CONNECTIONS FOR UNUSED INPUTS

Set the Address Switches per the instruction in Section 2.0.

Shielded cable, such as Belden 8762S, should be used for transducer wiring. The cable shield should be connected to chassis ground at the transducer end and left unconnected at the programmable controller end. Make wiring connections to and fasten the card edge connector or faceplate before applying power.

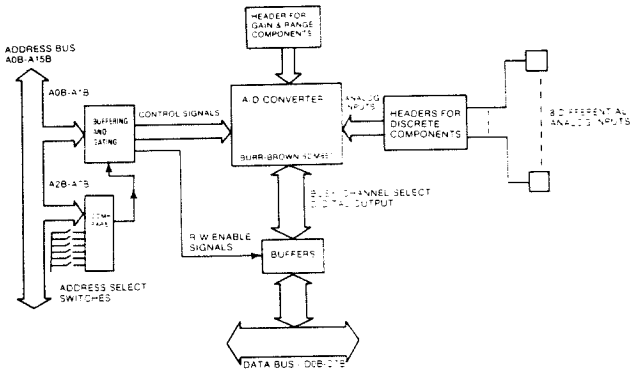

FIGURE 8. BLOCK DIAGRAM

DATA ACQUISITION MODULE

IMPORTANT

ENSURE THAT POWER TO THE CARD RACK IS OFF BEFORE INSERTING OR REMOVING THIS OR ANY MICRO-COMPUTER MODULE. Failure to do so may result in permanent damage to the module.

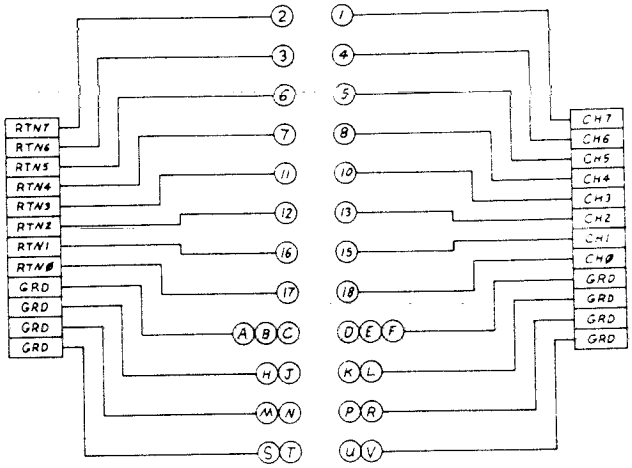

FIGURE 9. FACEPLATE SCHEMATIC

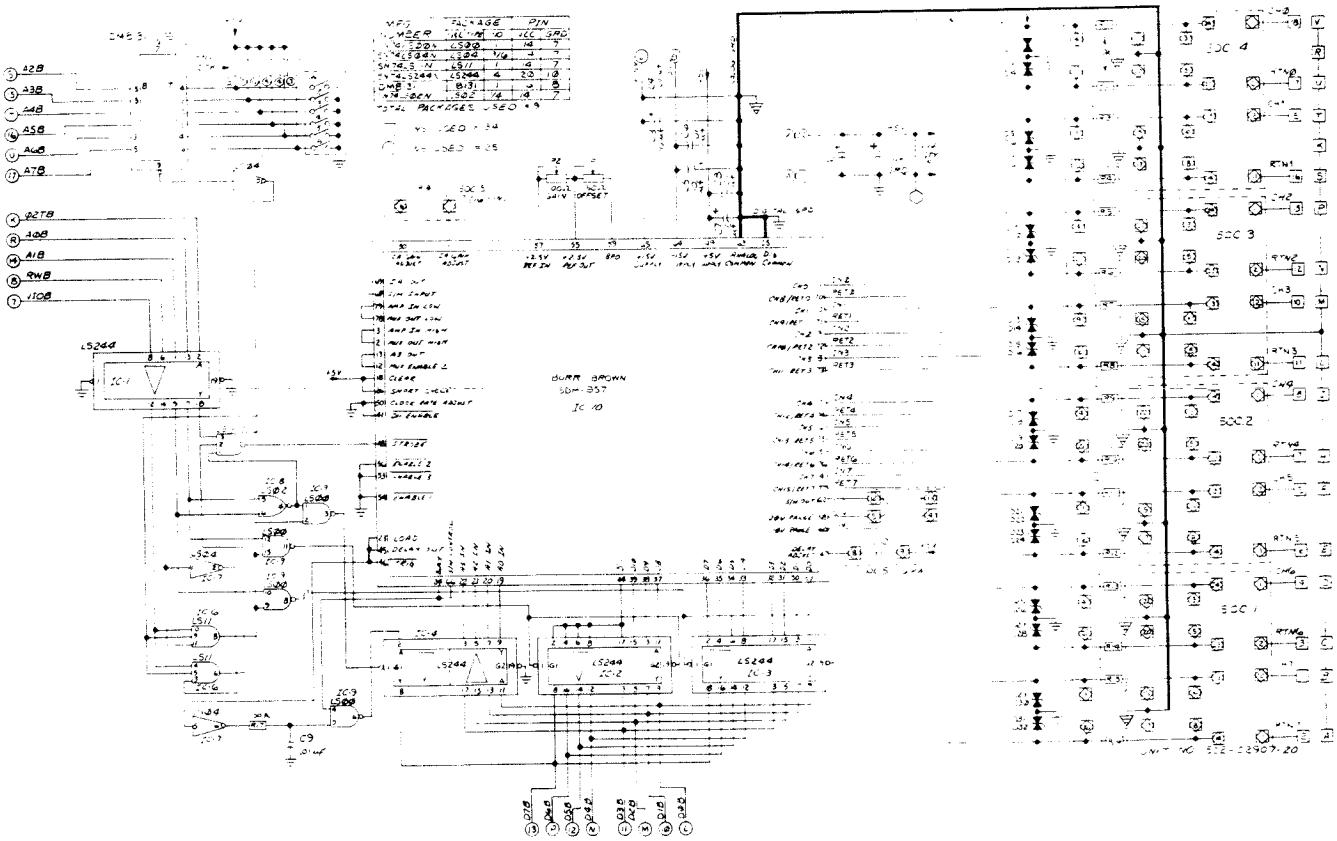

FIGURE 10. MODULE SCHEMATIC

UNIPOLAR DATA ACQUISITION MODULE

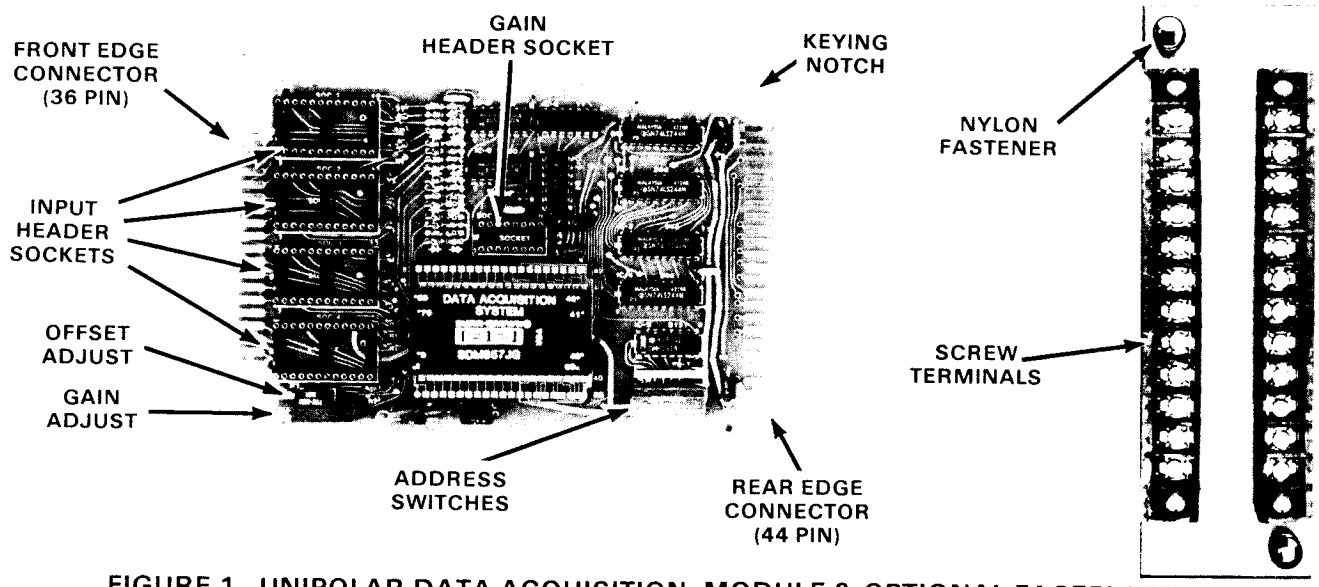

FIGURE 1. UNIPOLAR DATA ACQUISITION MODULE & OPTIONAL FACEPLATE

1.0 INTRODUCTION

Each Unipolar Data Acquisition Module (part number 502-03362-00) converts eight analog input levels to digital format for processing by the CPU. Gain control and voltage scaling capabilities enable the module to accept a wide range of analog input levels. The presence of the maximum input level results in 4,095 counts. Contained in the module are a socket for gain select components, sockets for headers with input conditioning components, a twelve-bit data acquisition device with built-in A/D converter and multiplexing circuitry, and gain and offset potentiometers. Current variations may be used as the input signal through the use of current to voltage conversion components, allowing the use of a 20mA loop standard, for example.

2.0 ADDRESSING

Each Unipolar Data Acquisition Module occupies four memory locations. The first six Address Switches must be set for the lowest of the four addresses desired. Table 1 contains the Address Switch settings for the 60 possible beginning address points. Unipolar Data Acquisition Modules may only be installed in the Master Rack.

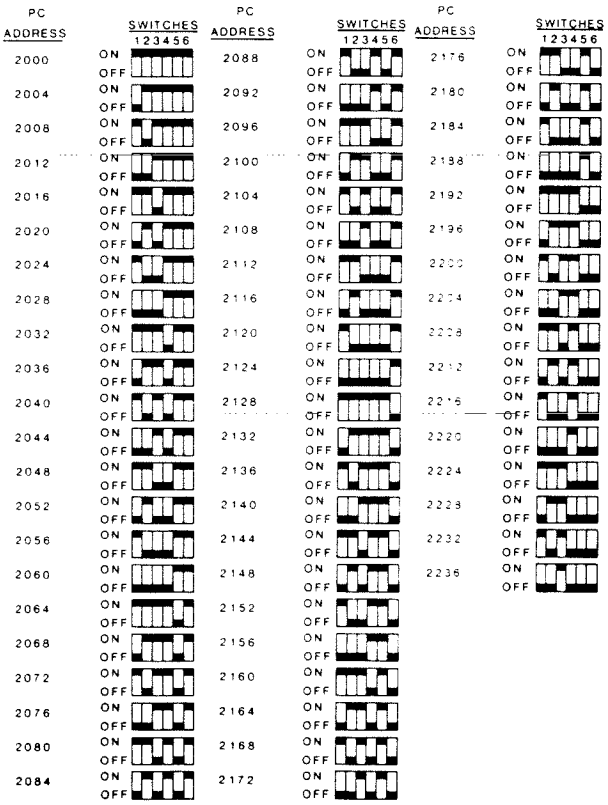

TABLE 1. ADDRESS SWITCH SETTINGS

3.0 SELECTION OF INPUT SIGNAL LEVELS

The key to successful use of the Unipolar Data Acquisition Module is to keep in mind that the Burr-Brown SDM-857 contains an A/D converter that is internally preceded by an Instrumentation Amplifier (IA) with a minimum gain of two. The output of the IA serves as the input to the A/D converter, which is configured for a 0 to +10 volt input. Thus, the effect of the IA gain on the input signal to the module must be considered when determining the level of input signal to the A/D converter.

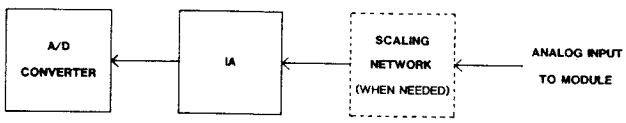

NOTE

The maximum input signal level for the Unipolar Data Acquisition Module is +5V.

3.1 GAIN SELECTION

The Gain Header socket accepts a 16-pin header plug (G&L Part No. 401-50463-00) with appropriate components for controlling the IA gain. The IA has a minimum gain of 2, but the gain is user-variable through the installation of a resistor of the appropriate value. Theoretically, the top IA gain is 500. In actual use, the influence of electrical noise in the environment makes a top IA gain of 200 a more realistic value.

The IA gain is increased when the maximum output of the IA (2x the maximum input to module) is less than 10V (the limit of the input range for the A/D converter). The necessary gain can be found by using the following formula:

$$\text{Gain} = \frac{10V}{Vin(max)}$$

10V is the upper limit of the A/D converter range and Vin(max) is the upper limit of the input signal to the module (in volts).

For example, with an A/D converter range of 0V-10V, and an input signal of 0V-1.5V, the factory adjusted IA gain of 2 will not be adequate. The input signal must be amplified so its range limits are equal to the range limits of the A/D converter. Dividing 1.5 into 10V results in a required gain of 6.67. The resistor value necessary to obtain the correct gain is found with the following formula:

$$R_{ext.} = 20K/(Gain-2)$$

20K is a constant that reflects the resistance value inherent in the design of the Unipolar Data Acquisition Module. In this example, Rext = 20,000/(6.67-2); or approximately 4.3K ohms. The resistor is connected across pins 1 and 16 of the Gain Header plug as shown in Figure 2.

If the minimum gain of 2 is desired, pins 1 and 16 are left open.

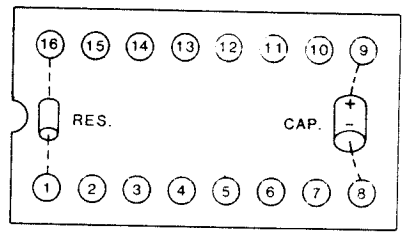

FIGURE 2. GAIN HEADER WIRING

3.1.1 IA Settling Time Adjustment

When a gain of 10 or greater is desired, a capacitor must be added to the circuit to permit an increased IA set-

tling time. Capacitor location is depicted in Figure 2. The following chart shows the capacitor size necessary with various gain values:

IA GAIN	CAPACITOR SIZE
10-49	.001 uF
50-100	.0022 uF
101-500	.01 uF

3.2 INPUT HEADER SOCKETS

The four input header sockets on the Unipolar Data Acquisition Module accept 24-pin header plugs (G&L Part No. 401-50211-00). The user connects appropriate components to the plugs to condition the input signal. Each socket allows the user to condition two inputs. All four sockets are identical in configuration. Table 2 shows socket pin utilization.

Channel	Module Pin	Header Pin	Socket
0IN	18	1	4
0RTN	17	2	4
1IN	15	12	4
1RTN	16	11	4
2IN	13	1	3
2RTN	12	2	3
3IN	10	12	3
3RTN	11	11	3
4IN	8	1	2
4RTN	7	2	2
5IN	5	12	2
5RTN	6	11	2
6IN	4	1	1
6RTN	3	2	1
7IN	1	12	1
7RTN	2	11	1

TABLE 2. SOCKET PIN UTILIZATION

3.3 SCALING NETWORK

The effect of minimum IA gain on the input signal may result in a signal that exceeds the A/D converter range. In such cases, the input signal must be scaled down. This is accomplished by inserting a header plug containing appropriate components into the proper input header socket. A voltage scaling network is formed with resistors as shown in Figure 3. The equations used to calculate the proper resistor values are as follows:

$$R2 = \frac{5V}{Iin(max)}$$

$$R1 = \frac{Vin(max)R2}{5V} - R2$$

Iin(max) is the maximum input current in amperes. Vin(max) is the maximum input signal in volts. 5V is the maximum input voltage allowed across R2.

For example, assume a user-supplied power supply is used that provides 12 mA at 12V. R2 = 5V/.012A, or 417 ohms. R1 = [(12V x 417 ohms)/5V]-417 ohms, or 584 ohms.

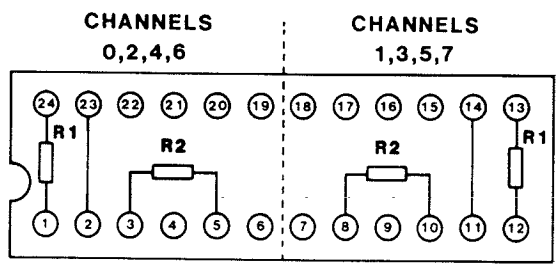

FIGURE 3. INPUT SIGNAL SCALING

NOTE

If input scaling is not desired, replace R1 with a wire jumper and eliminate R2.

4.0 AUXILIARY USE OF INPUT HEADERS

4.1 CURRENT TO VOLTAGE CONVERSION

Current variations can be used as the input to the Unipolar Data Acquisition Module by configuring the proper input header plug to accomplish current to voltage conversion. This operation is illustrated in Figure 4. The following formula determines the correct value for the resistor Rs:

$$Rs = \frac{10V}{2\ \mathrm{Iin(max)}}$$

10V is the upper limit of the A/D range. The 2 reflects the default IA gain. Iin(max) is the maximum input current (in amperes). For example, with the A/D range of 0 to +10V and a maximum input current of 25 mA, Rs = 10V/(2 x .025) or 200 ohms.

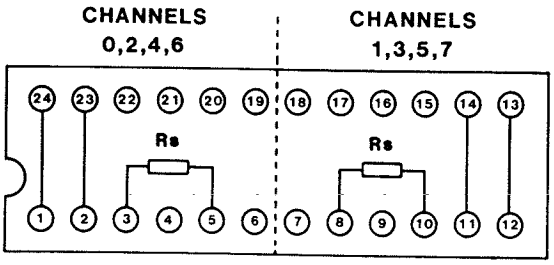

FIGURE 4. CURRENT TO VOLTAGE CONVERSION

NOTE

For maximum feedback accuracy, precision resistors (±.1%) with a minimum temperature coefficient (<100 PPM/degree C) should be used when configuring the Data Acquisition Module.

4.2 INPUT SIGNAL FILTERING

If it is desired that the input signal be filtered, a low-pass filter can be utilized through the use of a header plug containing an appropriate capacitor as shown in Figure 5. The formula for determining the proper value of capacitor is:

$$C = \frac{1}{2\ \pi\ FR}$$

F is the frequency above which all other frequencies will be attenuated and R equals 20,000, which is a constant that reflects the resistance value inherent in the design of the module.

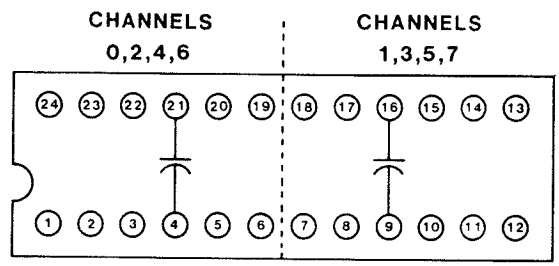

FIGURE 5. FILTERING CAPACITOR

5.0 HARDWARE INTERFACING

5.1 CARD EDGE CONNECTOR

A 36-pin card edge connector may be used to connect the Unipolar Data Acquisition Module to external devices. Phosphor-bronze crimp contacts with gold-over-nickel plating are available. Dummy contacts may be inserted into the connector at unused places for better holding power.

UNIPOLAR DATA ACQUISITION MODULE

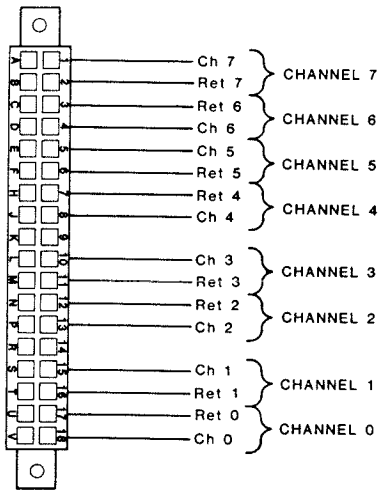

FIGURE 6. CARD EDGE CONNECTOR WIRING

5.2 FACEPLATE CONNECTOR

The Faceplate Connector allows wiring connections to be conveniently made to compression screw terminals.

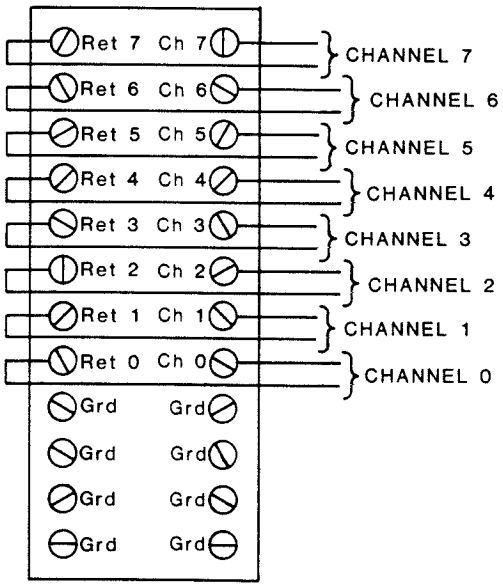

FIGURE 7. FACEPLATE WIRING

5.3 UNUSED INPUTS

Unused inputs should be connected to analog ground on the same module as shown in Table 3.

Input	Connect	Socket
0	4 to 22	4
1	16 to 17	4
2	4 to 22	3
3	16 to 17	3
4	4 to 22	2
5	16 to 17	2
6	4 to 22	1
7	16 to 17	1

Return	Connect	Socket
0	21 to 20	4
1	9 to 15	4
2	21 to 20	3
3	9 to 15	3
4	21 to 20	2
5	9 to 15	2
6	21 to 20	1
7	9 to 15	1

TABLE 3. ANALOG GROUND CONNECTIONS FOR UNUSED INPUTS

6.0 INSTALLATION

The Unipolar Data Acquisition Module may only be installed in the Master Rack. Expansion racks are used for AC and DC Input/Output modules.

The rack is physically keyed to prevent modules from being inserted incorrectly. Set the Address Switches per the instruction in Section 2.0.

Shielded cable, such as Belden 8762S, should be used for transducer wiring. The cable shield should be connected to chassis ground at the transducer end and left unconnected at the programmable controller end. Make wiring connections to and fasten the card edge connector or faceplate before applying power.

UNIPOLAR DATA ACQUISITION MODULE

IMPORTANT

ENSURE THAT POWER TO THE CARD RACK IS OFF BEFORE INSERTING OR REMOVING THIS OR ANY MICRO-COMPUTER MODULE. Failure to do so may result in permanent damage to the module.

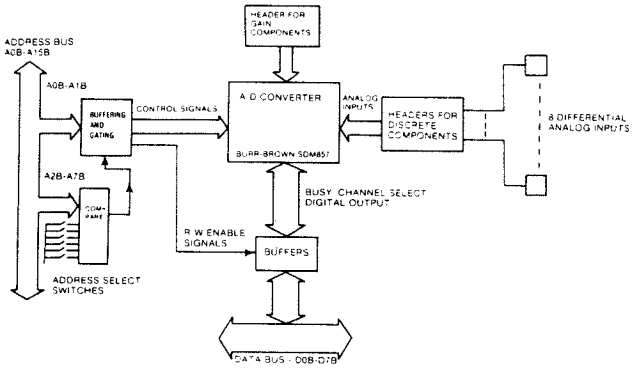

FIGURE 8. BLOCK DIAGRAM

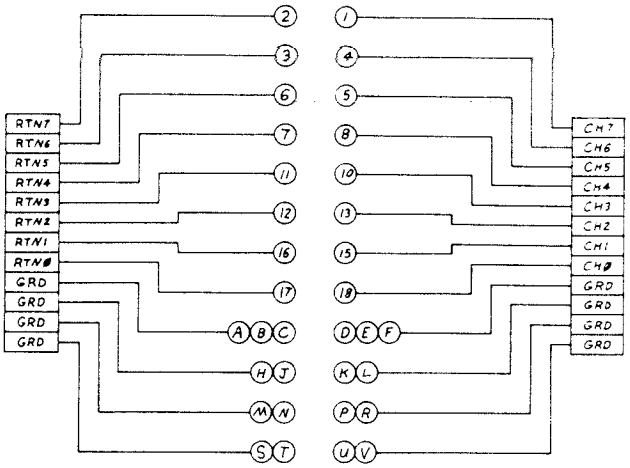

FIGURE 9. FACEPLATE SCHEMATIC

UNIPOLAR DATA ACQUISITION MODULE

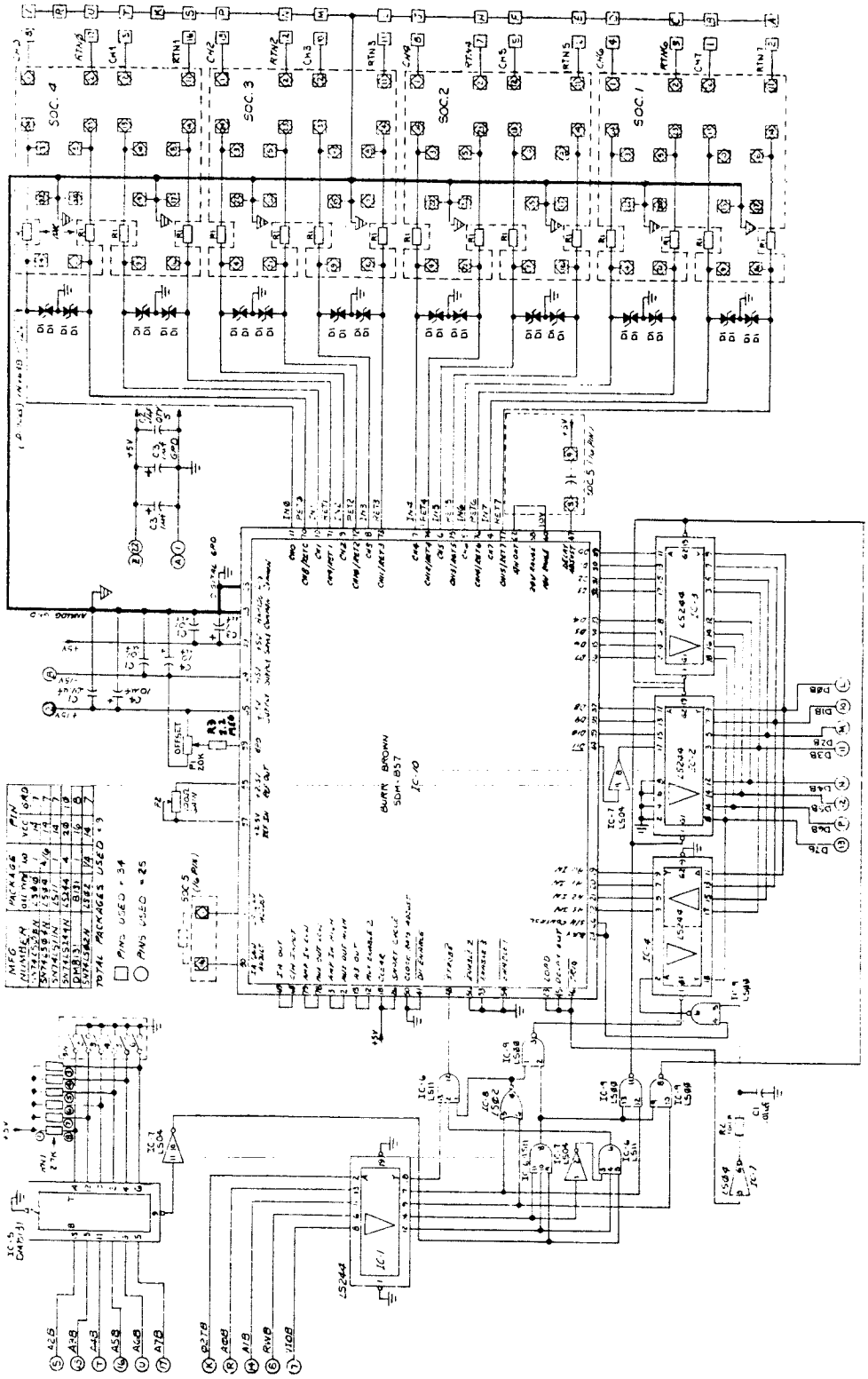

FIGURE 10. MODULE SCHEMATIC

D/A CONVERTER MODULE

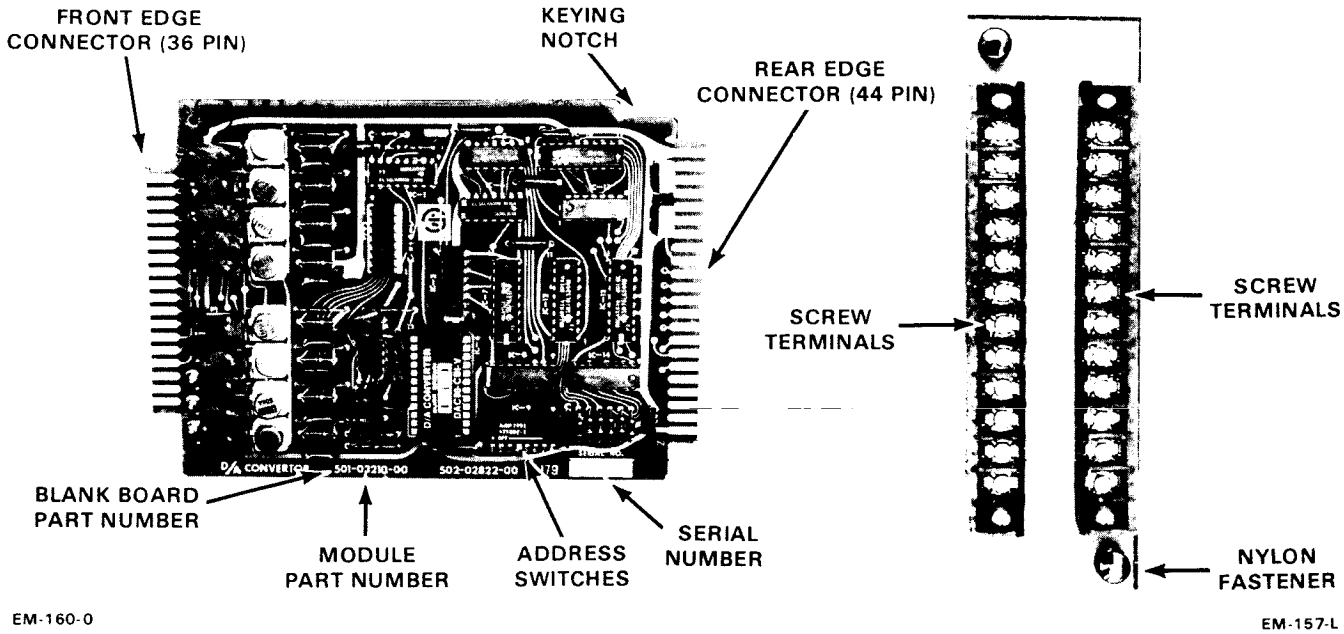

FIGURE 1. D/A CONVERTER MODULE & OPTIONAL FACEPLATE

1.0 INTRODUCTION

The D/A (Digital-to-Analog) Converter Module contains the circuitry necessary to generate a dc voltage level proportional to the binary number stored into it. The output range of -10 to +10 volts corresponds to the binary equivalent of -2048 to +2047 'counts' input. An analog multiplexer, with sample-and-hold circuits, permits the module to drive eight output channels.

External devices are connected to the module through either a 36-pin card edge connector or a D/A Converter Faceplate. The latter option permits convenient wiring connections to be made to compression screw terminals. A D/A Converter Extender Card is available to facilitate potentiometer adjustment when the faceplate is installed.

2.0 INSTALLATION

The D/A Converter Module may only be installed in the Master Rack. Expansion Racks are used for AC and DC Input/Output Modules.

The rack is physically keyed to prevent modules from being inserted incorrectly. Set the Address Switches per the instructions in Section 3.0.

IMPORTANT

ENSURE THAT POWER TO THE CARD RACK IS OFF BEFORE INSERTING OR REMOVING THIS OR ANY MICRO-COMPUTER MODULE. Failure to do so may result in permanent damage to the module.

Shielded cable, such as Belden 8762S, should be used for analog device wiring connections. The cable shield should be connected to chassis ground at the Programmable Controller end and left unconnected at the device end. Make wiring connections to and fasten the card edge connector or faceplate before applying power.

The D/A Converter Module interfaces with servo drives or other voltage-controlled devices through either a card edge connector or an optional faceplate connector.

D/A CONVERTER MODULE

2.1 CARD EDGE CONNECTOR

A 36-pin card edge connector may be used to connect the D/A Converter Module to external devices. Phosphor-bronze crimp contacts, with gold-over-nickel plating, are available. Dummy contacts may be inserted into the connector at unused places for improved holding power.

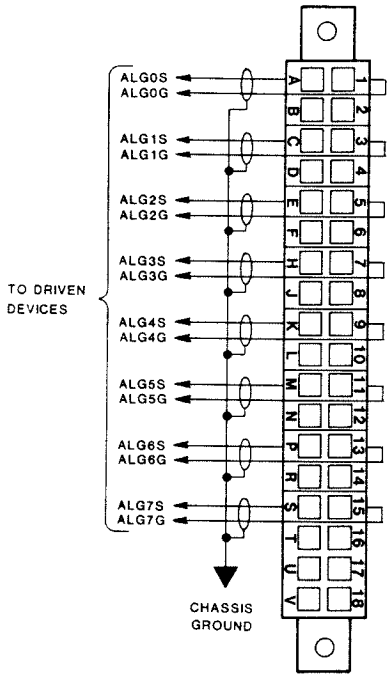

FIGURE 2. CARD EDGE CONNECTOR WIRING

2.2 FACEPLATE CONNECTOR

The Faceplate Connector allows wiring connections to be conveniently made to compression screw terminals. See FIGURE 3.

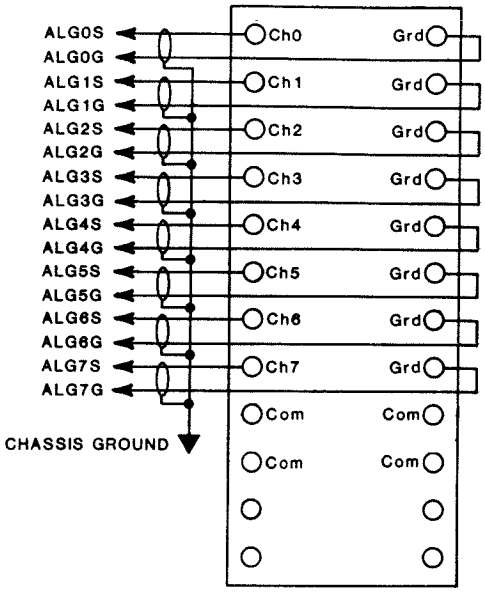

FIGURE 3. FACEPLATE CONNECTOR WIRING

3.0 ADDRESSING

TABLE 1. ADDRESS SWITCH SETTINGS

PC ADDRESS	SWITCHES 123456	PC ADDRESS	SWITCHES 123456	PC ADDRESS	SWITCHES 123456
2000	ON OFF	2088	ON OFF	2176	ON OFF
2004	ON OFF	2092	ON OFF	2180	ON OFF
2008	ON OFF	2096	ON OFF	2184	ON OFF
2012	ON OFF	2100	ON OFF	2188	ON OFF
2016	ON OFF	2104	ON OFF	2192	ON OFF
2020	ON OFF	2108	ON OFF	2196	ON OFF
2024	ON OFF	2112	ON OFF	2200	ON OFF
2028	ON OFF	2116	ON OFF	2204	ON OFF
2032	ON OFF	2120	ON OFF	2208	ON OFF
2036	ON OFF	2124	ON OFF	2212	ON OFF
2040	ON OFF	2128	ON OFF	2216	ON OFF
2044	ON OFF	2132	ON OFF	2220	ON OFF
2048	ON OFF	2136	ON OFF	2224	ON OFF
2052	ON OFF	2140	ON OFF	2228	ON OFF
2056	ON OFF	2144	ON OFF	2232	ON OFF
2060	ON OFF	2148	ON OFF	2236	ON OFF
2064	ON OFF	2152	ON OFF		
2068	ON OFF	2156	ON OFF		
2072	ON OFF	2160	ON OFF		
2076	ON OFF	2164	ON OFF		
2080	ON OFF	2168	ON OFF		
2084	ON OFF	2172	ON OFF		

D/A CONVERTER MODULE

The D/A Converter Module occupies four memory locations. The six board-mounted Address Switches must be set for the lowest of the four addresses desired. TABLE 1 contains the Address Switch settings for the 60 possible beginning address points.

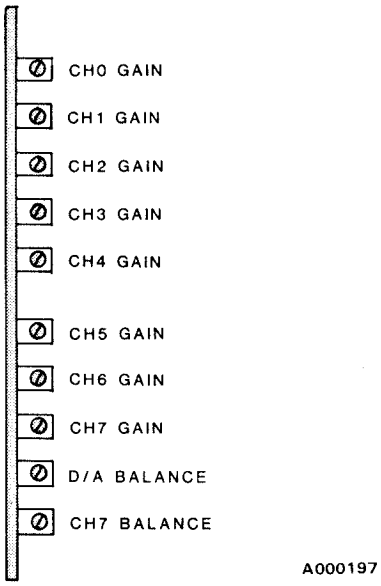

FIGURE 4. CARD EDGE VIEW

4.1 GAIN ADJUST

A multi-turn potentiometer is associated with each D/A channel for the purpose of gain adjustment. The gain of each channel is adjustable from unity (1) to approximately 3.8.

4.2 BALANCE ADJUST

A multi-turn potentiometer is provided so that the D/A may be balanced. This allows 0.0 volts to be output when a binary number of 0 is stored into the module. All eight channels are simultaneously affected by this adjustment.

An additional potentiometer is provided to permit independent balancing of Channel 7. This adjustment does not affect any other channel, and is primarily used for spindle or velocity drives.

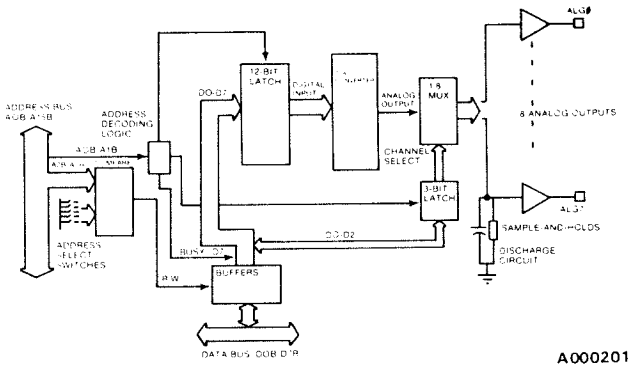

FIGURE 5. BLOCK DIAGRAM

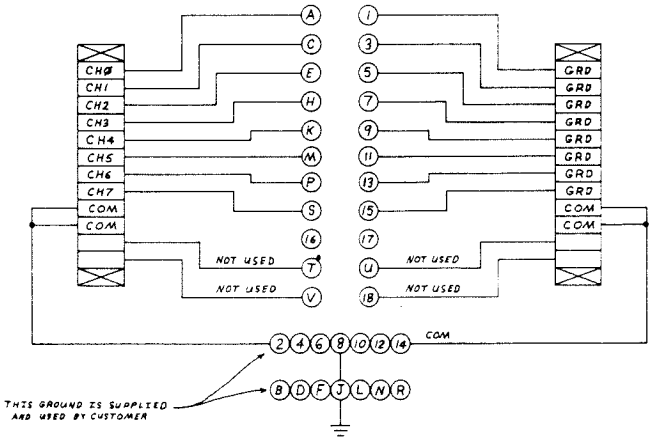

FIGURE 6. FACEPLATE SCHEMATIC

D/A CONVERTER MODULE

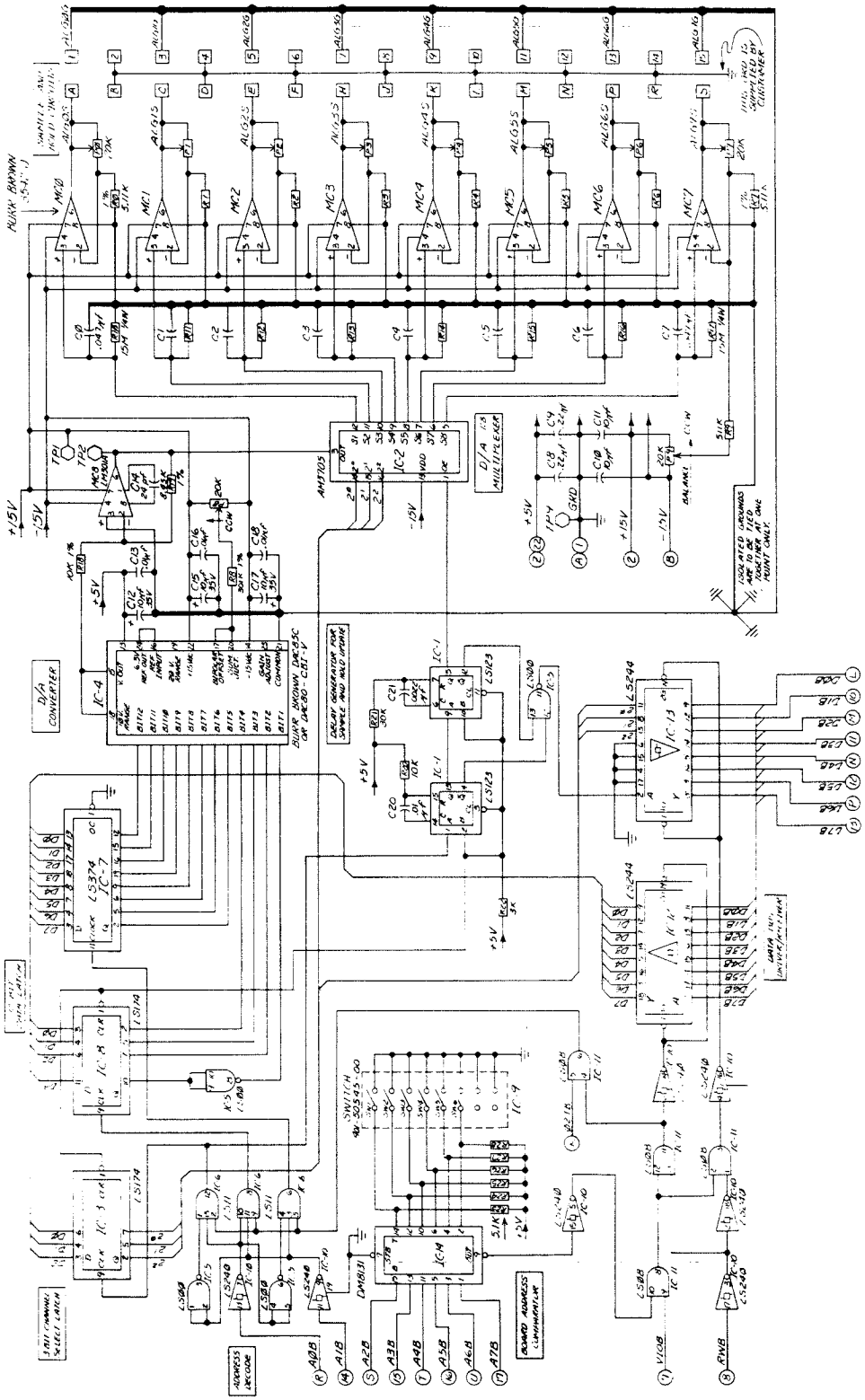

502-02822-00

FIGURE 7. D/A CONVERTER MODULE SCHEMATIC

4-20 mA ANALOG OUTPUT MODULE

PHOTOGRAPH NOT AVAILABLE AT PRINTING TIME

1.0 INTRODUCTION

The 4-20 mA Analog Output Module (part no. 502-03443-00) contains the circuitry necessary to generate a DC current level proportional to the binary number stored in it. The output range of 4-20 mA corresponds to the binary equivalent of 0 to 4,095 "counts" input. There is also an optional output range of 0 to 20 mA. An analog multiplexer, with sample-and-hold circuits, permits the module to drive four channels.

The 4-20 mA Analog Output Module interfaces with servo drives and other current-controlled devices through either a card edge connector or an optional faceplate connector. The faceplate option permits convenient wiring connections to be made to compression screw terminals.

NOTE

DO NOT ADJUST ANY OF THE POTENTIOMETERS ON THIS MODULE. ALL ADJUSTMENTS HAVE BEEN MADE AT THE FACTORY.

The digital and analog sections of the module are isolated by optical isolators. The power for the digital section comes off of the backplane. However, the power for the analog section must be provided by a separate external power supply wired to the front edge connector of the module. The external power supply must be able to provide +15V @ 175 mA and -15V @ 50mA.

The maximum allowable load per channel is 500Ω.

IMPORTANT

ENSURE THAT POWER TO THE MASTER RACK IS OFF BEFORE INSERTING OR REMOVING ANY MICROCOMPUTER MODULE. Failure to do so may result in permanent damage to the module.

2.0 INSTALLATION

The 4-20 mA Analog Output Module may only be installed in the Master Rack. Extension Racks are used for AC or DC input and output Modules only.

The Master Rack is physically keyed to prevent modules from being inserted incorrectly. Set the address switches as indicated in Section 4 before inserting the module.

With the power off, insert the module into the Master Rack. Attach a card edge connector or faceplate to the front edge of the module. The wiring for the module is described in Section 4.

4-20 mA ANALOG OUTPUT MODULE

3.0 ADDRESSING

The 4-20 mA Analog Output Module occupies four memory locations. The six module-mounted address switches must be set to the lowest of the four addresses desired. See TABLE 1 for the Address Switch settings of the 60 possible beginning address points.

NOTE

The four addresses chosen for this module must not overlap any memory addresses occupied by another module.

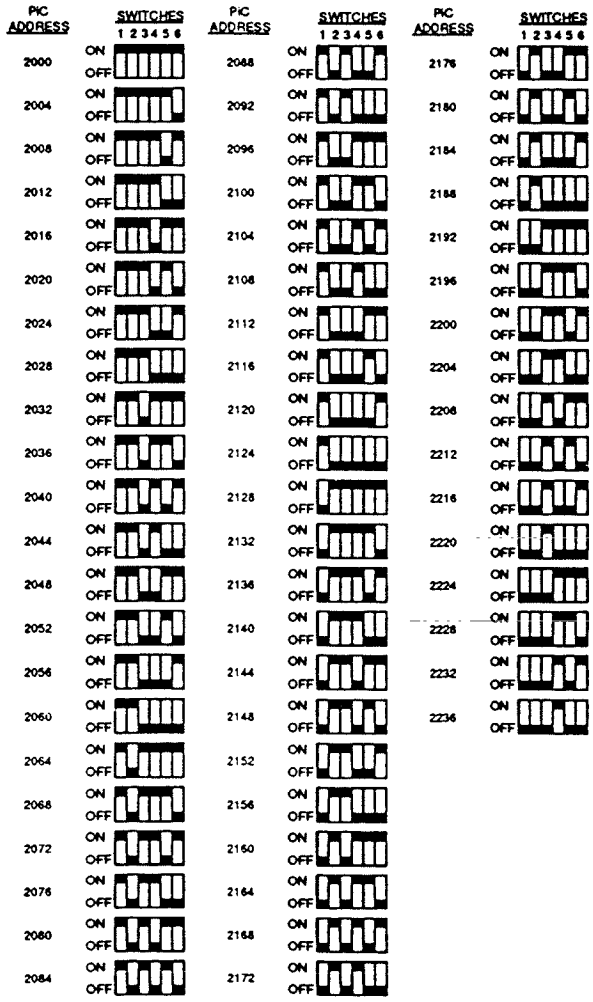

TABLE 1. ADDRESS SWITCH SETTINGS

4.0 HARDWARE INTERFACING

Shielded wire, such as Belden 8762S, should be used for analog device wiring connections. The cable shield should be connected at the device end. Make the wiring connections and attach the card edge connector or faceplate to the front of the module before applying power to the Master Rack.

The terminals labeled COMMON are connected together on the module. These may be used as cable shield terminations if one of them is connected to chassis ground on the device connected to this module.

4.1 CARD EDGE CONNECTOR

A 36-pin card edge connector (part no. 401-50657-00) may be used to connect the module to external devices. See FIGURE 1. Phosphor-bronze crimp contacts (part no. 401-50460-00), with gold over nickel plating, are available. Dummy contacts (part no. 401-50459-00) may be inserted into the connector at unused places for improved holding power.

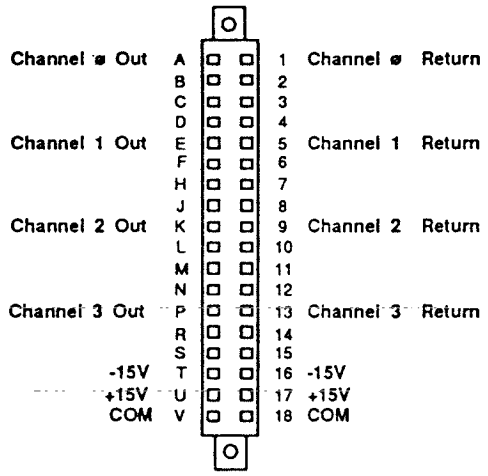

Shields should be tied to chassis or single point ground. Connect unused pins to COM on the Card Edge Connector.

FIGURE 1. CARD EDGE CONNECTOR WIRING

4.2 FACEPLATE CONNECTOR

The optional Faceplate Connector (part no. 502-03444-00) allows wiring to be made to compression screw terminals. See FIGURE 2.

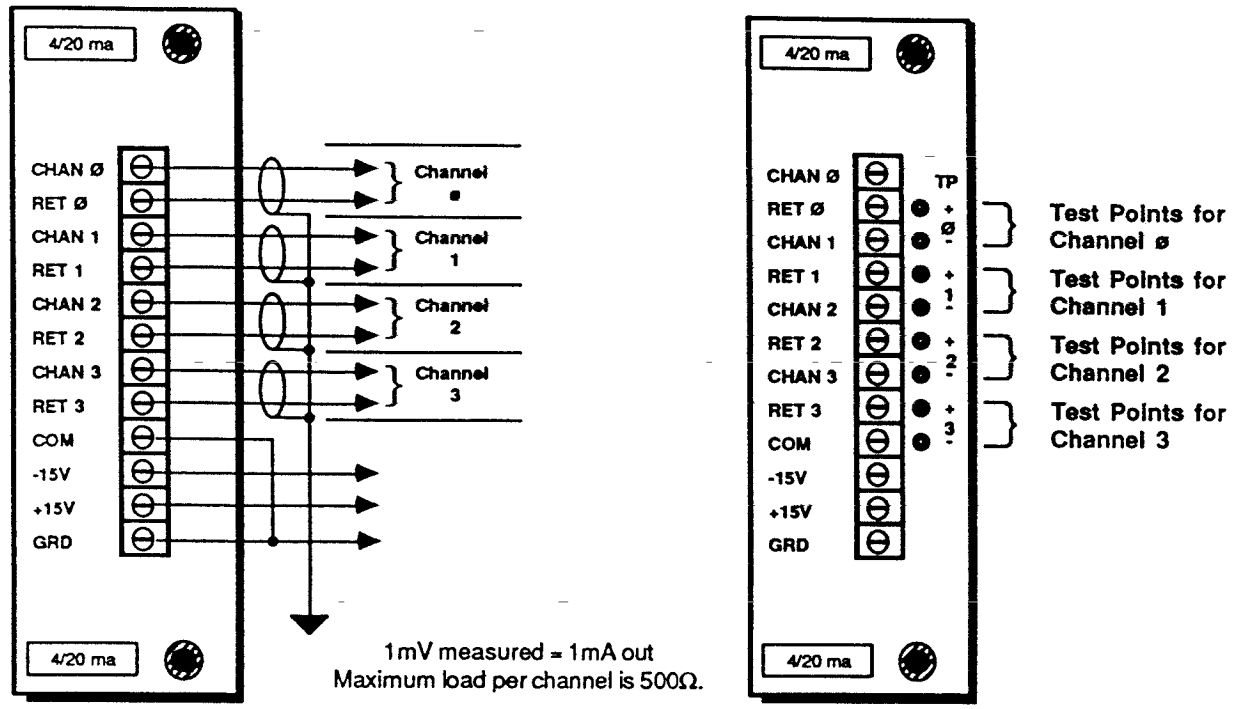

Test points not shown.

Location of Test Points

FIGURE 3. FACEPLATE CONNECTOR WIRING AND TEST POINT LOCATION

5.0 CHANGING THE OUTPUT RANGE

The standard output range for each channel on this module is from 4-20 mA. However, the range for each channel can be set to 0-20 mA by changing the position of the Optional Span Jumpers. Each channel is independent of the others (i.e. Channel A can have a range from 4-20 mA and Channel B can have a range from 0-20 mA). FIGURE 3 shows the locations of the jumpers and their settings. Refer to the inset in the illustration for the optional 0-20 mA setting.

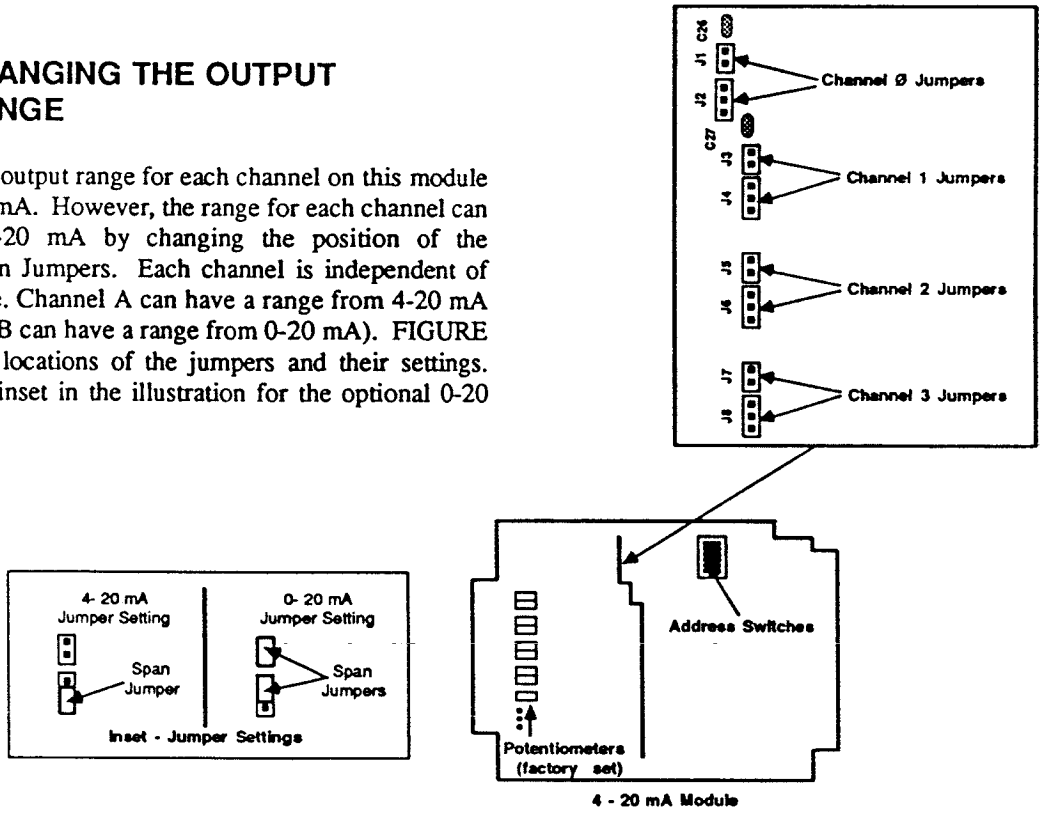

FIGURE 4. JUMPER LOCATIONS AND SETTINGS

4-20 mA ANALOG OUTPUT MODULE

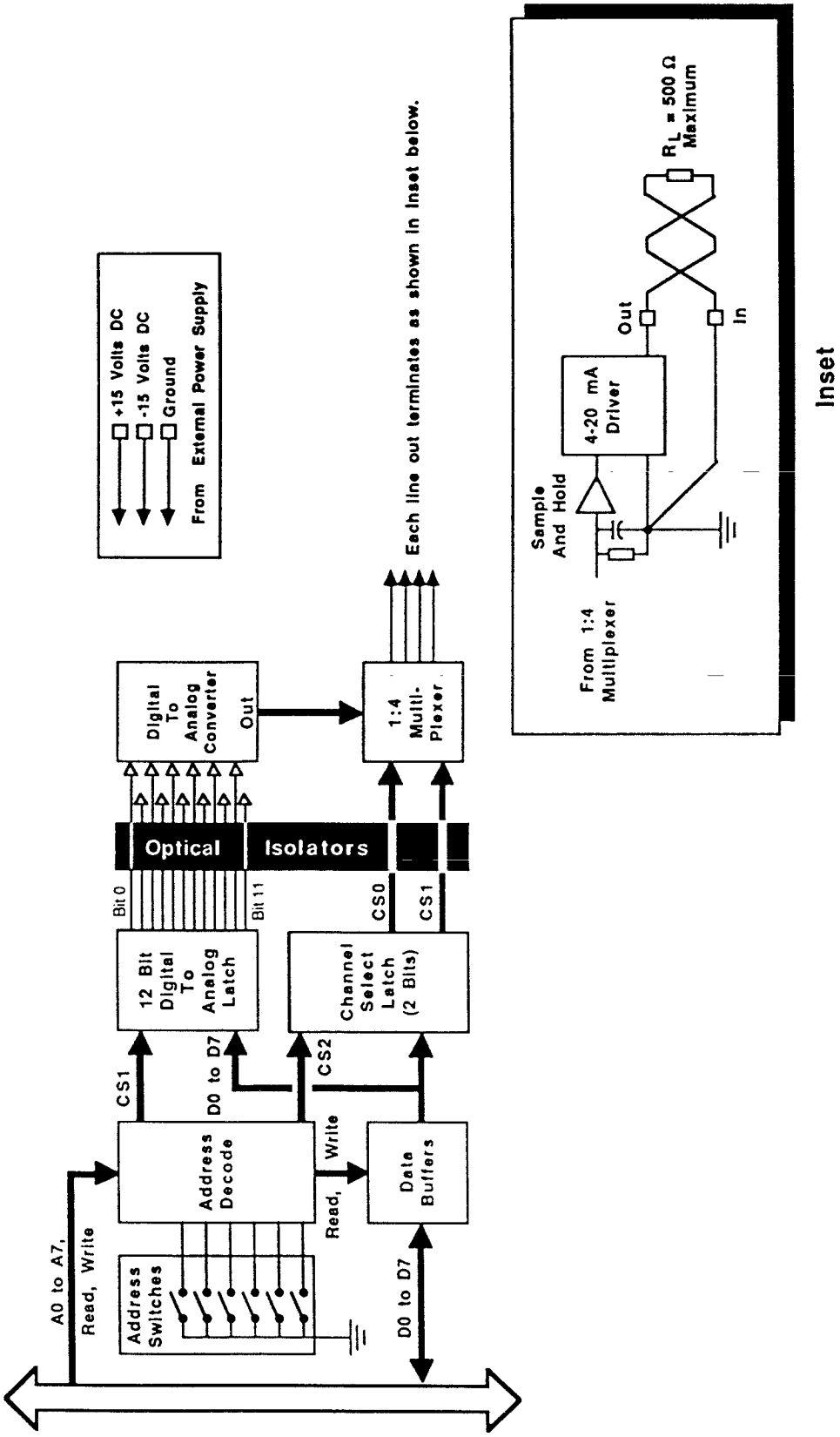

FIGURE 5. BLOCK DIAGRAM

uP PROGRAMMABLE TIMER MODULE

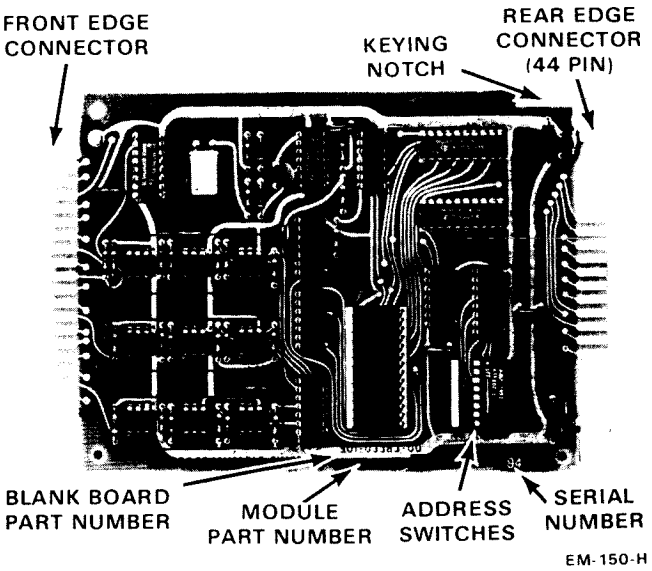

FIGURE 1. uP PROGRAMMABLE TIMER

1.0 INTRODUCTION

The uP Programmable Timer Module, part number 502-02908-00, provides a variety of timing signals and system interrupts. The module may be utilized for such tasks as frequency measurement, event counting, interval measuring, square wave generation, gated delay signals, single pulses and pulse width modulation.

The uP Programmable Timer Module contains three sets of user signals. These signals are brought out to the frontplane of the module for interfacing to the programmable controller. Each set of signals contains an output signal, external clock signal and external gate signal. The signals may be interfaced directly to TTL devices or through optical isolation circuitry for isolated devices.

An on-board 4 MHz clock is divided down to supply 4 MHz, 2 MHz, 1 MHz, 500 KHz and 250 KHz signals. These clock signals may be used to source the external clock and external gate signals.

2.0 ADDRESSING

The uP Programmable Timer Module occupies eight memory locations. The five board-mounted Address Switches must be set for the lowest of the eight addresses desired.

TABLE 1. ADDRESS SWITCH SETTINGS

PC ADDRESS	SWITCHES 12345	PC ADDRESS	SWITCHES 12345
x000	ON OFF	x128	ON OFF
x008	ON OFF	x136	ON OFF
x016	ON OFF	x144	ON OFF
x024	ON OFF	x152	ON OFF
x032	ON OFF	x160	ON OFF
x040	ON OFF	x168	ON OFF
x048	ON OFF	x176	ON OFF
x056	ON OFF	x184	ON OFF
x064	ON OFF	x192	ON OFF
x072	ON OFF	x200	ON OFF
x080	ON OFF	x208	ON OFF
x088	ON OFF	x216	ON OFF
x096	ON OFF	x224	ON OFF
x104	ON OFF	x232	ON OFF
x112	ON OFF		
x120	ON OFF		

TABLE 1 contains the Address Switch settings for the 30 possible beginning address points. Note that switches 6, 7 and 8 are supplied but not used and may be ignored.

3.0 CARD EDGE CONNECTOR

A 36-pin card edge connector (part number 401-50657-00) may be used to wire the uP Programmable Timer Module to external devices. Phosphor bronze crimp contacts (part number 401-50460-00) with gold-over-nickel plating are available. "Dummy" contacts (part number 401-50459-

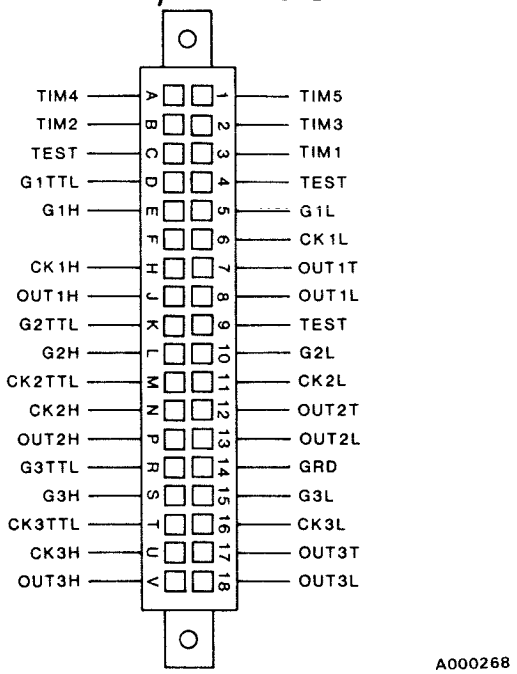

FIGURE 2. CARD EDGE CONNECTOR WIRING

00) may be inserted into the connector at unused places for better holding power.

4.0 INSTALLATION

The uP Programmable Timer Module must be installed in the Master Rack. The rack is physically keyed to prevent modules from being inserted incorrectly. Set the Address Switches per the instructions in Section 2.0.

IMPORTANT

ENSURE THAT POWER TO THE CARD RACK IS OFF BEFORE INSERTING OR REMOVING THIS OR ANY MICRO-COMPUTER MODULE. Failure to do so may result in permanent damage to the module.

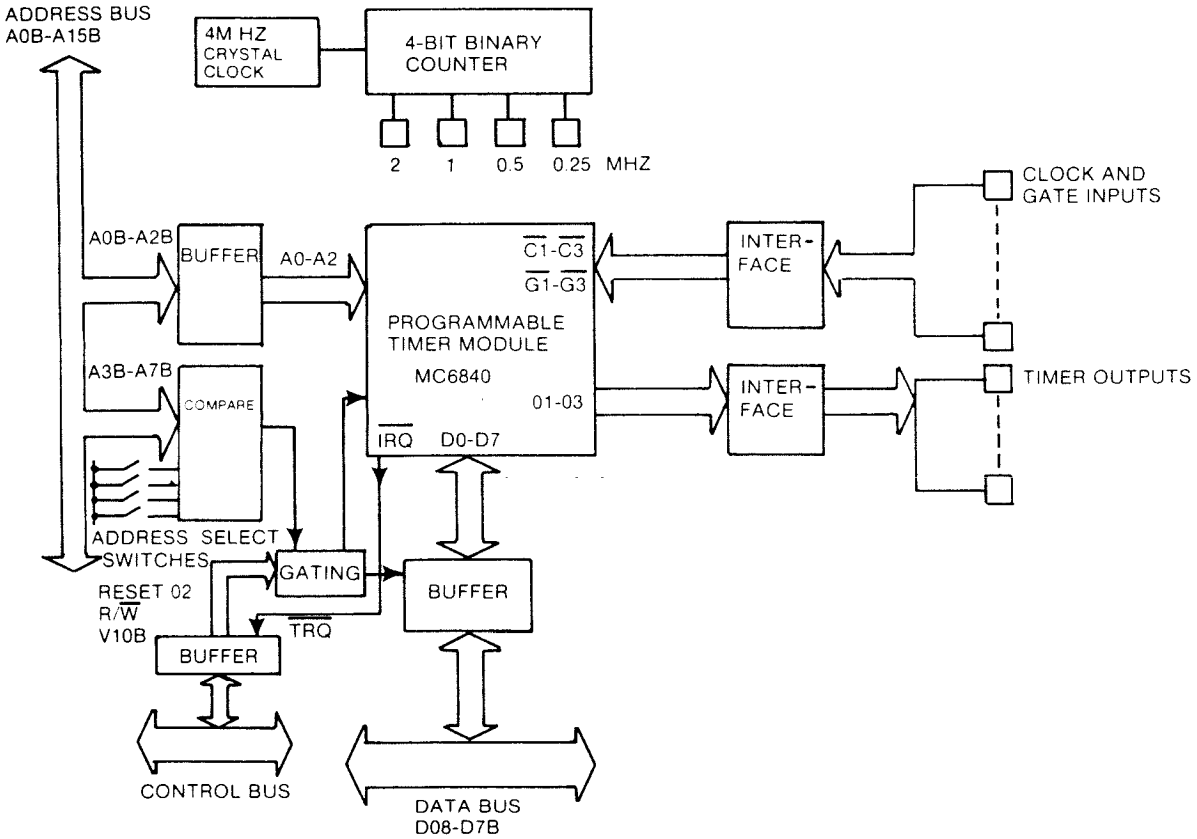

FIGURE 3. BLOCK DIAGRAM

μP PROGRAMMABLE TIMER MODULE

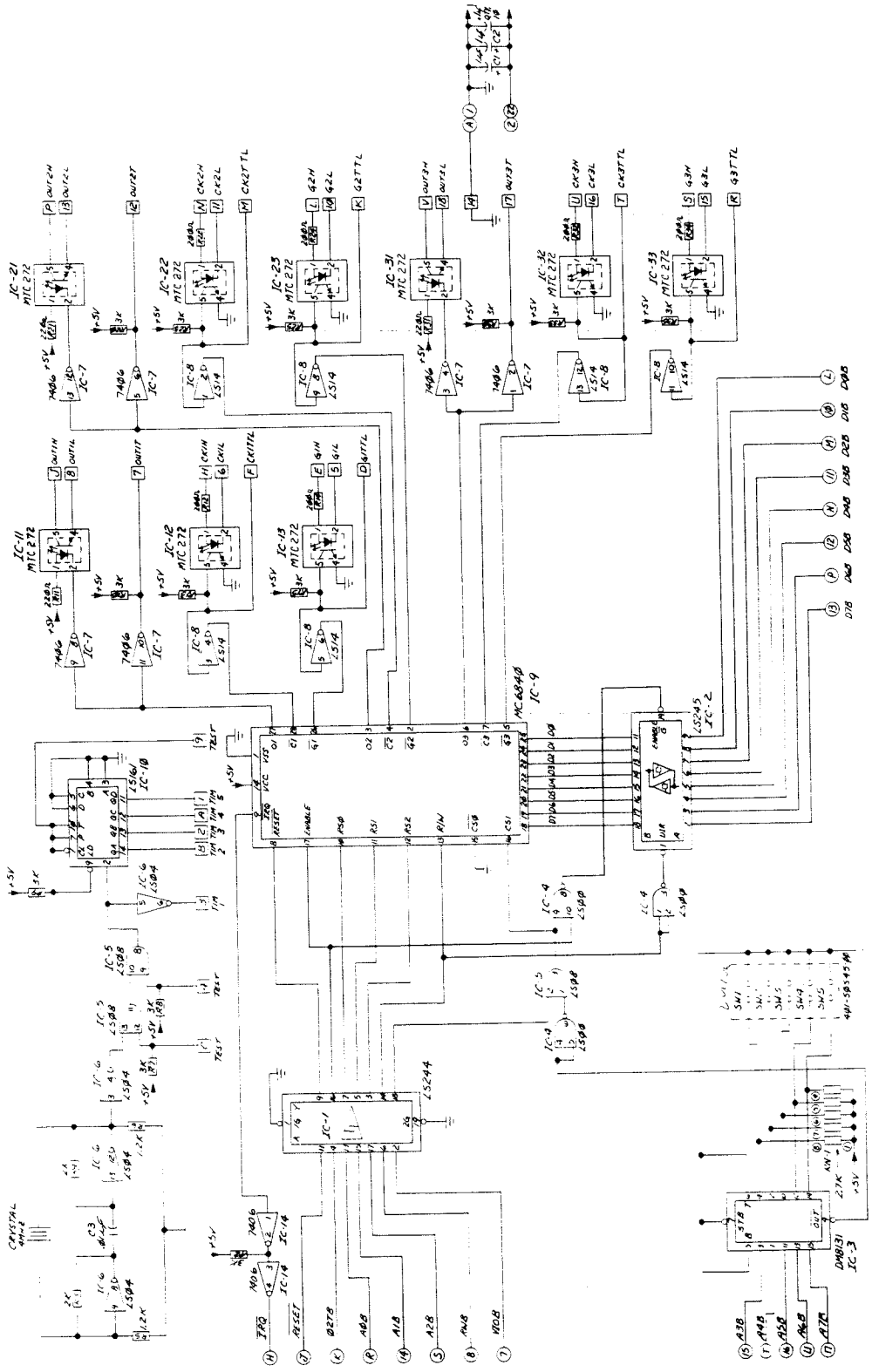

502-02908-00

FIGURE 4. SCHEMATIC

STEP RATE POSITION COUNTER MODULE

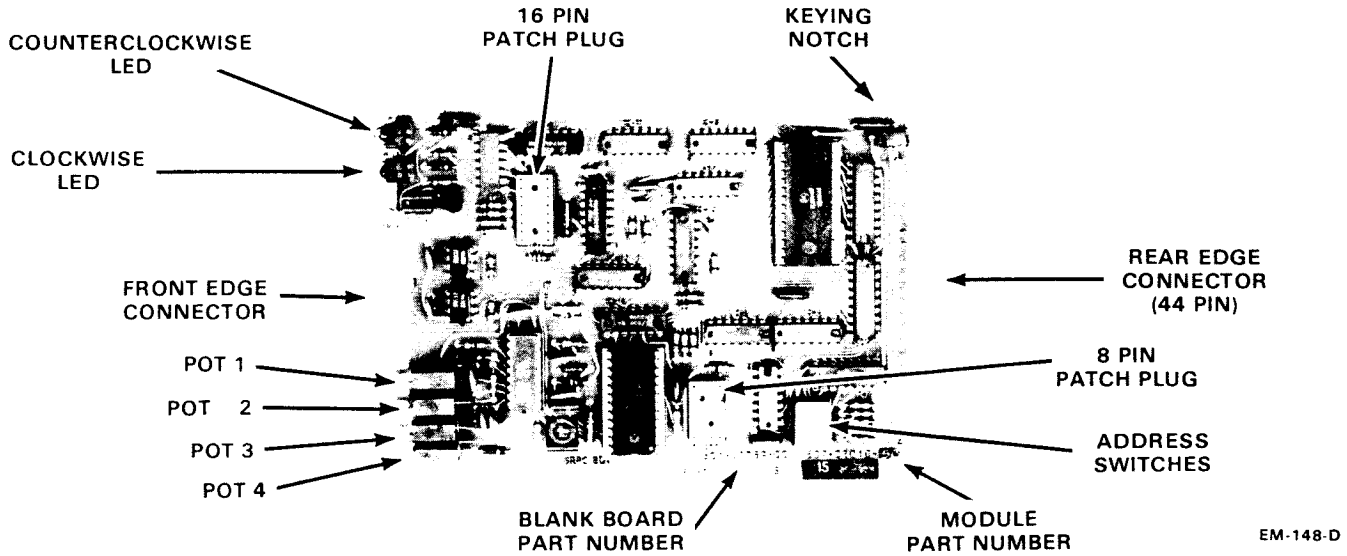

FIGURE 1. STEP RATE POSITION COUNTER MODULE

1.0 INTRODUCTION

The Step Rate Position Counter (SRPC) Module allows the user to control the speed and direction of a step motor. The speed is controlled by a stream of pulses that can be spaced and timed to match load and motor characteristics. Four versions of the SRPC Module are available.

The part numbers of the SRPC Modules with different options are:

502-03016-00: SRPC Module without ramping and with 5 volt optical isolators.

502-03016-10: SRPC Module without ramping and with open collector optical isolators.

502-03016-50: SRPC Module with ramping and with 5 volt optical isolators.

502-03016-60: SRPC Module with ramping and with open collector optical isolators.

1.1 RAMPING OPTION

The SRPC Module is available with or without ramping circuitry. The ramping circuitry provides the ability to gradually accelerate and decelerate a step motor. If the step motor will be operated at a step rate greater than the maximum starting/stopping step rate of the translator/step motor, and the translator does not have ramping, an SRPC Module with ramping should be used. The ramping circuitry on the SRPC Module will not allow acceleration of a step motor after initial acceleration. To change speeds, the motor must first be decelerated to zero and then accelerated to the new speed.

NOTE

A translator is the electrical drive portion of the step motor that converts the pulse rate from the SRPC Module into the switching sequence needed to drive the motor in steps. A translator with ramping circuitry may be referred to as a buffered translator.

1.2 OPTICAL ISOLATOR OPTION

Each SRPC Module has two optical isolators. One optical isolator sends

pulses when clockwise motion is commanded and the other sends pulses when counterclockwise motion is commanded. An external supply voltage must be connected to the SRPC Module to provide a source voltage for the optical isolators. The source voltage should be supplied by the translator. The source voltage may be either regulated to 5 volts dc or used directly as the input to the transistor portion of the optical isolator. The transistors act as solid state switches so that the source voltage will be pulsed at the commanded step rate. The PC bus is optically isolated from the transistor switches for reliable operation. A 5 volt optical isolator and an open collector optical isolator are available.

1.2.1 5 VOLT OPTICAL ISOLATOR

The 5 volt optical isolator requires a 5 volt dc source voltage. Voltages between 8 and 15 volts dc may be regulated to 5 volts dc by using the on-board regulator. The 5 volt optical isolator has very fast switching characteristics. Stepping motors that require very fast rise and fall times may require this type of optical isolator.

1.2.2 OPEN COLLECTOR OPTICAL ISOLATOR

This type of optical isolator requires a source voltage that is between 5 and 30 volts dc.

2.0 STEP RATES

The step rate is the number of off-to-on transitions (pulses) of the step line voltage that occur in a given period of time. The step rate is normally expressed in steps per second (steps/sec). The higher the step rate, the faster the motor will rotate. For example; if a step motor that requires 200 steps per revolution is commanded to rotate at 2000 steps/sec, the step motor will rotate at a velocity of 10 revolutions per second.

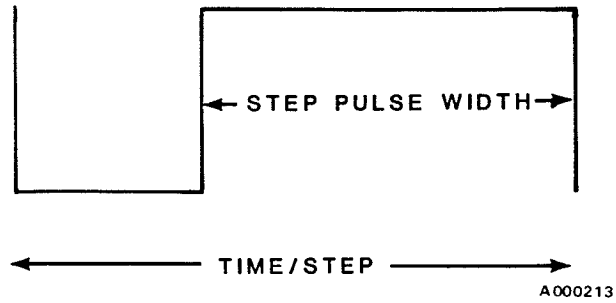

FIGURE 2. STEP PULSE COMPONENTS

FIGURE 2 shows the components of each step. The time/step is defined by the Call Routine that controls the SRPC Module. The step pulse width is defined by the position of a jumper on the 16 pin patch plug (SECTION 4.0).

The maximum and minimum step rates that can be commanded by the SRPC Module are a function of the 2 MHZ internal clock and the Call Routine used to control the SRPC Module. The highest step rate obtainable is 100,000 steps/sec. The lowest step rate obtainable, without an external clock, is 2 steps/sec.

CAUTION

For SRPC Modules with ramping, step rates greater than 30,000 steps/sec should not be commanded. Unpredictable speeds and inaccurate positioning could result.

An external clock may be used to reduce the step rate below 2 steps/sec. The frequency of the external clock (as compared to the 1 MHZ) determines the new minimum step rate. The formula for determining the minimum step rate is:

$$\frac{\text{EXTERNAL CLOCK FREQUENCY}}{1{,}000{,}000\ \text{Hz}} = \text{STEPS/SEC. (MIN.)}$$

The minimum step rate (as determined by the preceding formula) is required to calculate the new maximum step rate. The formula for determining the maximum step rate is:

$$\text{STEPS/SEC.(MIN.)} * 65{,}000 = \text{STEPS/SEC. (MAX.)}$$

EXAMPLE: If a 1 MHZ external clock is connected to the SRPC Module, the minimum step rate that can be commanded is 1 step/sec. The maximum step rate that can be commanded is 65,000 steps/sec.

NOTE

Connection of an external clock is described in Section 5.0.

3.0 ADDRESSING

Each SRPC Module occupies eight memory locations. The five board-mounted Address Switches must be set for the lowest of the eight addresses desired. TABLE 1 contains the Address Switch settings for the 30 possible beginning address points.

TABLE 1. ADDRESS SWITCH SETTINGS

PC ADDRESS SWITCHES

	1	2	3	4	5
2000	ON				
	OFF				
2008	ON				
	OFF				
2016	ON				
	OFF				
2024	ON				
	OFF				
2032	ON				
	OFF				
2040	ON				
	OFF				
2048	ON				
	OFF				
2056	ON				
	OFF				
2064	ON				
	OFF				
2072	ON				
	OFF				
2080	ON				
	OFF				
2088	ON				
	OFF				
2096	ON				
	OFF				
2104	ON				
	OFF				
2112	ON				
	OFF				
2120	ON				
	OFF				

PC ADDRESS SWITCHES

	1	2	3	4	5
2128	ON				
	OFF				
2136	ON				
	OFF				
2144	ON				
	OFF				
2152	ON				
	OFF				
2160	ON				
	OFF				
2168	ON				
	OFF				
2176	ON				
	OFF				
2184	ON				
	OFF				
2192	ON				
	OFF				
2200	ON				
	OFF				
2208	ON				
	OFF				
2216	ON				
	OFF				
2224	ON				
	OFF				
2232	ON				
	OFF				

Note that the last two switch settings in TABLE 1, corresponding to addresses 2240 through 2255, should not be used since these locations may be occupied by fixed-address modules.

4.0 16 PIN PATCH PLUG

A 16 pin patch plug (with 3 jumpers) is provided so that the user can configure the SRPC Module to match the requirements of the translator being employed. The 3 jumpers must be installed on this patch plug. Refer to FIGURE 3 and Sections 4.1 through 4.3 for information regarding the positioning of the three jumpers.

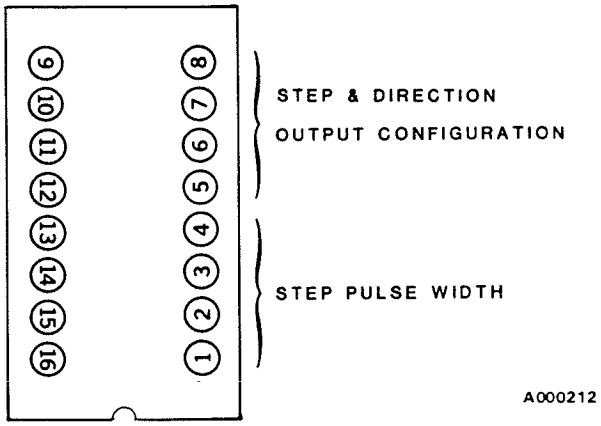

FIGURE 3. 16 PIN PATCH PLUG

4.1 INDEPENDENT STEP & DIRECTION SIGNALS

The following jumper configuration is to be used when the translator which is being employed requires an independent step signal and an independent direction signal. To achieve this condition, jumper pin 8 to pin 9 and pin 5 to pin

NOTE

When pin H is low, counterclockwise (CCW) rotation will be commanded and the CCW LED will be illuminated. Conversely, when pin H is high, clockwise (CW) rotation will be commanded and the CW LED will be illuminated.

12. The step signal will now be provided to pin D of the front edge connector and the direction signal will be provided to pin H of the front edge connector.

4.2 COMBINED STEP & DIRECTION SIGNALS

The following jumper configuration is to be used when the translator which is being employed requires a combined step and direction signal. To achieve this condition, jumper pin 7 to pin 10 and pin 6 to pin 11. When CW rotation is commanded, the required signal will be present on pin D of the front edge connector and the CW LED will be illuminated. When CCW rotation is commanded, the required signal will be present on pin H of the front edge connector and the CCW LED will be illuminated.

4.3 STEP PULSE WIDTH

The following jumper configurations are used to select the desired width of the step pulse. One of the following configurations must be selected:

1. 80 Microsecond width - Jumper pin 4 to pin 13.
2. 40 Microsecond width - Jumper pin 3 to pin 14.
3. 15 Microsecond width - Jumper pin 2 to pin 15.
4. 5 Microsecond width - Jumper pin 1 to pin 16.

5.0 HARDWARE INTERFACING

The SRPC Module interfaces to the translator of the step motor via a 24 pin edge connector. FIGURE 4 illustrates the pin connections and pin functions for an SRPC Module with 5 volt dc optical isolators (502-03016-00 and 502-03016-50). The 5 volt dc optical isolators require a 5 volt dc input at pin E. A 5 volt dc regulator is provided on the module to regulate 8-15 volt dc inputs. Pin A is the input to the regulator. Pin B is the output of the regulator. FIGURE 5 illustrates the pin connections and pin functions for an SRPC Module with open collector optical isolators (502-03016-10 and 502-03016-60). Both figures show the two variations in the functions of pin D and H. The configuration of the jumpers on the 16 pin patch plug, as explained in SECTION 4.0, determines the functions of pins D and H.

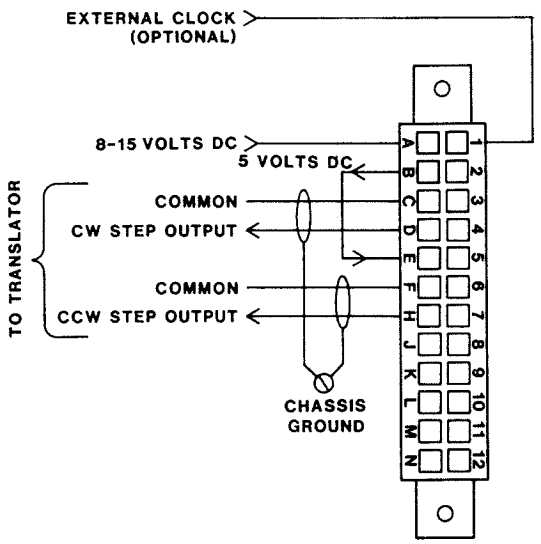

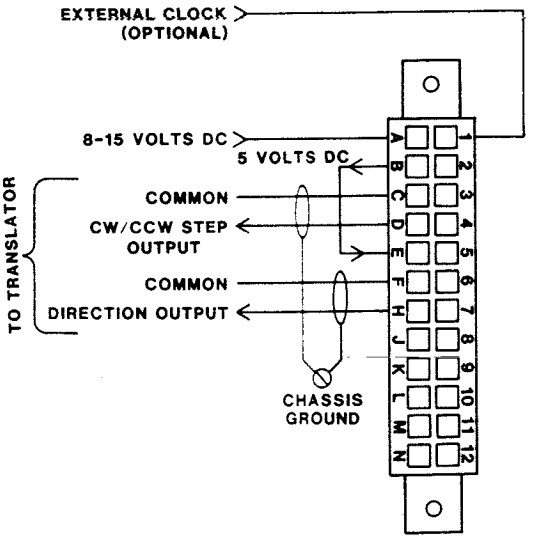

A000209

FIGURE 4. CARD EDGE CONNECTOR WIRING FOR 5 VOLT DC OPTICAL ISOLATORS

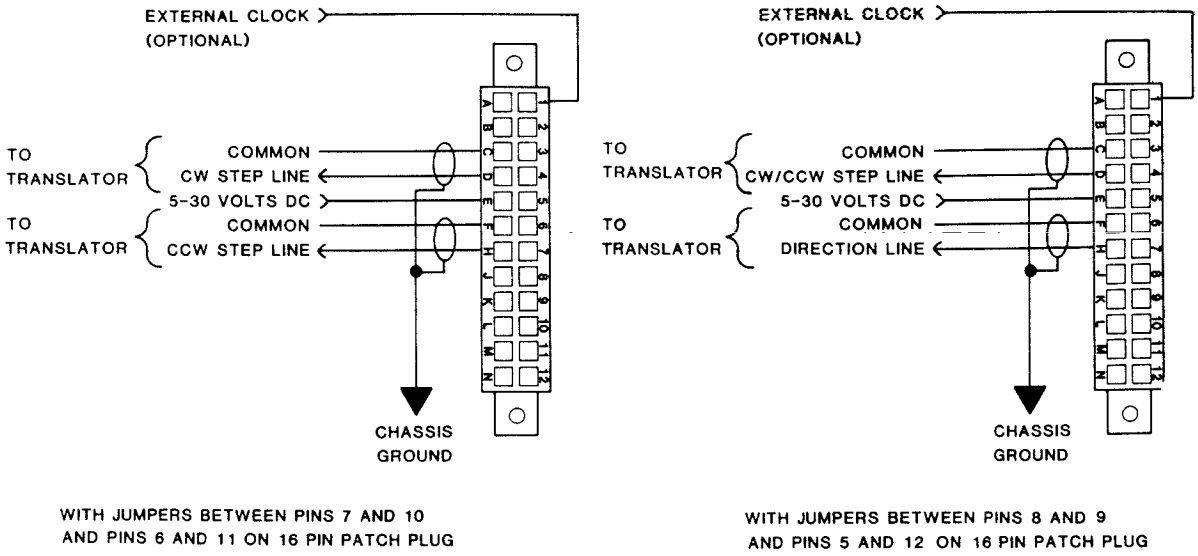

FIGURE 5. CARD EDGE CONNECTOR WIRING FOR OPEN COLLECTOR OPTICAL ISOLATORS

IMPORTANT

If the translator does not have optically isolated inputs, the shielded cables between the SRPC Module and translator should be limited to a length of 10 feet.

6.0 RAMPING

SECTION 6.1 and SECTION 6.2 only apply to SRPC Modules with ramping (502-03016-50 and 502-03016-60).

6.1 8 PIN PATCH PLUG

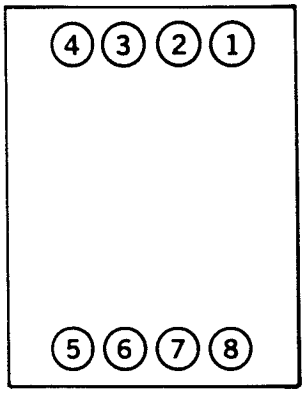

FIGURE 6. 8 PIN PATCH PLUG

An 8 pin patch plug is provided to enable the user to configure the ramping characteristics of the SRPC Module. Three components, two capacitors and one resistor, will be inserted on this patch plug. The values of these components is dependent on the commanded step rate. Ramping will only be implemented for step rates that are less than 30,000 steps/sec.

FIGURE 6 depicts the 8 pin patch plug and sections 6.1.1 through 6.1.3 explain how the three components should be installed on this patch plug.

6.1.1 OSCILLATOR CAPACITOR

The oscillator capacitor determines the maximum step rate of the ramping output. TABLE 2 shows the optimum values of this capacitor at various step rates. Insert one lead of the oscillator capacitor into pin 1 and the other lead into pin 8.

6.1.2 DAMPING RESISTOR

The damping resistor is used to reduce the oscillation or overshoot of the step motor rotor. As indicated in TABLE 2, the value of this resistor will be the

same for all step rates up to 30,000 steps/min. Insert one lead of the damping resistor into pin 2 and the other lead into pin 7.

6.1.3 RAMP CAPACITOR

The ramp capacitor determines the slope of the ramp (ramp time) during acceleration and deceleration. TABLE 2 shows the optimum values of this capacitor at various step rates. Insert one lead of the ramp capacitor into pin 4 and the other lead into pin 5.

TABLE 2. 8 PIN PATCH PLUG COMPONENTS

STEPS/SEC.	OSCILLATOR CAPACITOR (PIN 1 TO PIN 8)	DAMPING RESISTOR (PIN 2 TO PIN 7)	RAMP CAPACITOR (PIN 4 TO PIN 5)
0-3000	.01 uf	6.8 K OHM	.68 UF
0-6000	.0047 uf	6.8 K OHM	.68 uf
0-12000	.0022 uf	6.8 K OHM	.1 uf
0-30000	.001 uf	6.8 K OHM	.1 uf

6.2 RAMPING ADJUSTMENTS

Four potentiometers (pots) are provided near the front edge of the SRPC Module to fine tune the ramping characteristics. The functions of the four pots are:

POT 1: Balances the ramp up and ramp down time. For example: Adjust Pot 1 when the ramp down time is so long that the step motor will not "creep" into position at the end of a move.

POT 2: Fine tunes the slope of the ramp (ramp time) established by the ramp capacitor.

POT 3: Adjusts the minimum step rate output during ramping. This step rate must be within the starting/stopping step rate that is specified for the translator/step motor.

POT 4: Adjusts the maximum step rate established by the oscillator capacitor.

7.0 INSTALLATION

The SRPC Module must be installed in the Master Rack. The rack is physically keyed to prevent modules from being inserted incorrectly. Set the Address Switches per the instructions in Section 3.0. Fasten the front edge connector before applying power.

IMPORTANT

ENSURE THAT POWER TO THE CARD RACK IS OFF BEFORE INSERTING OR REMOVING THIS OR ANY MICRO-COMPUER MODULE. Failure to do so may result in permanent damage to the module.

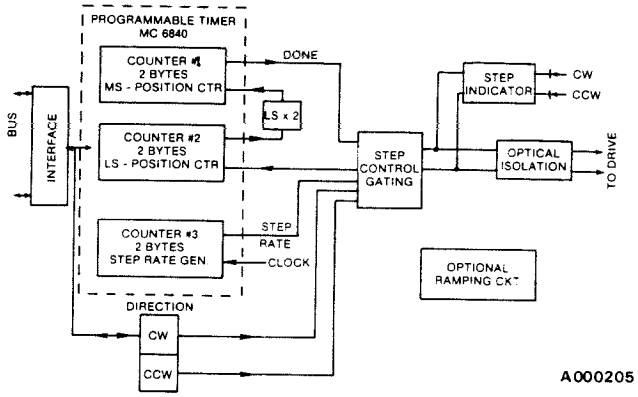

FIGURE 7. BLOCK DIAGRAM

STEP RATE POSITION COUNTER MODULE

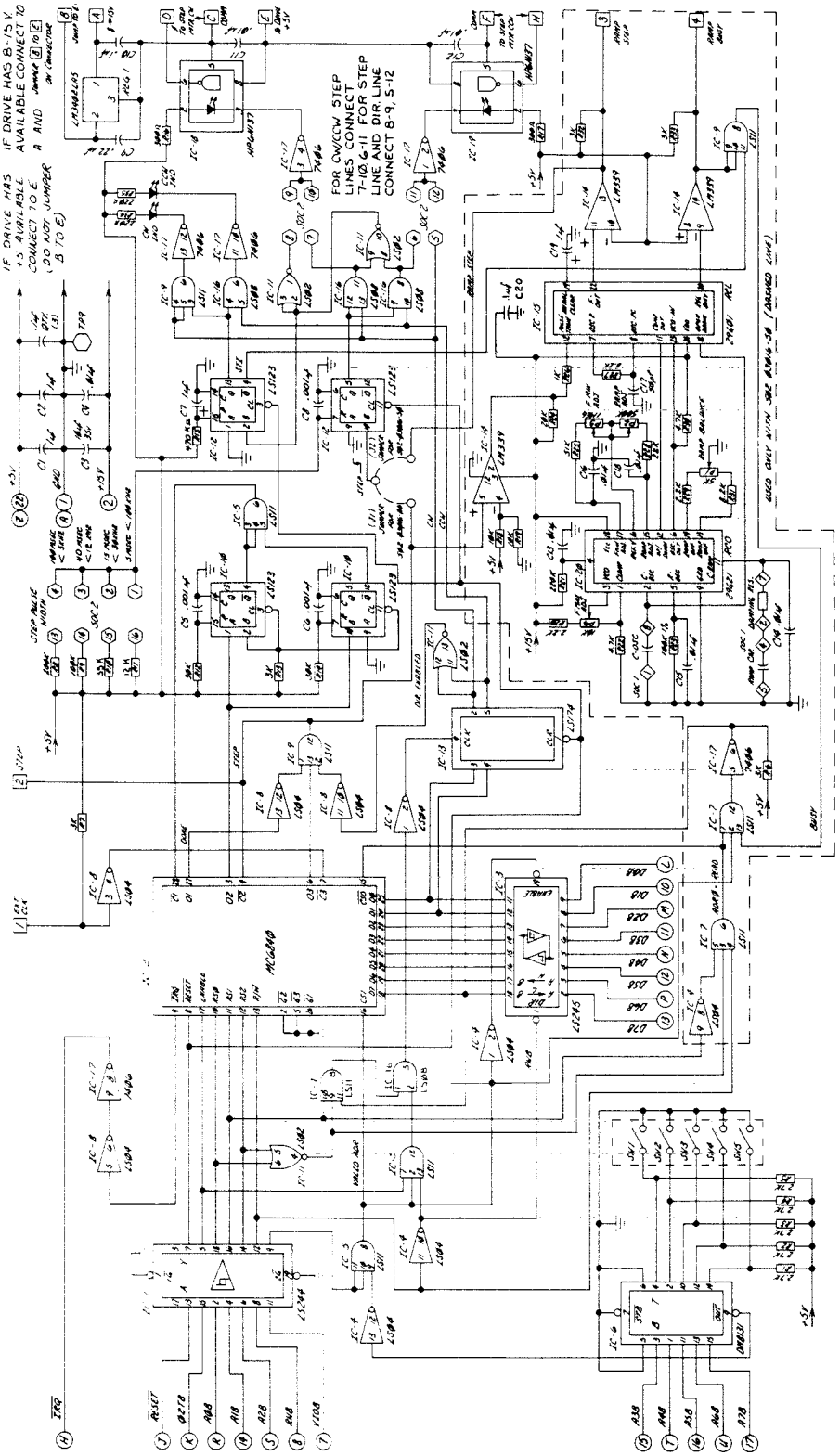

502-03016-50

FIGURE 8. SCHEMATIC

APPENDIX B

POWER SUPPLIES

GIDDINGS & LEWIS
ELECTRONICS

TTM-23-133

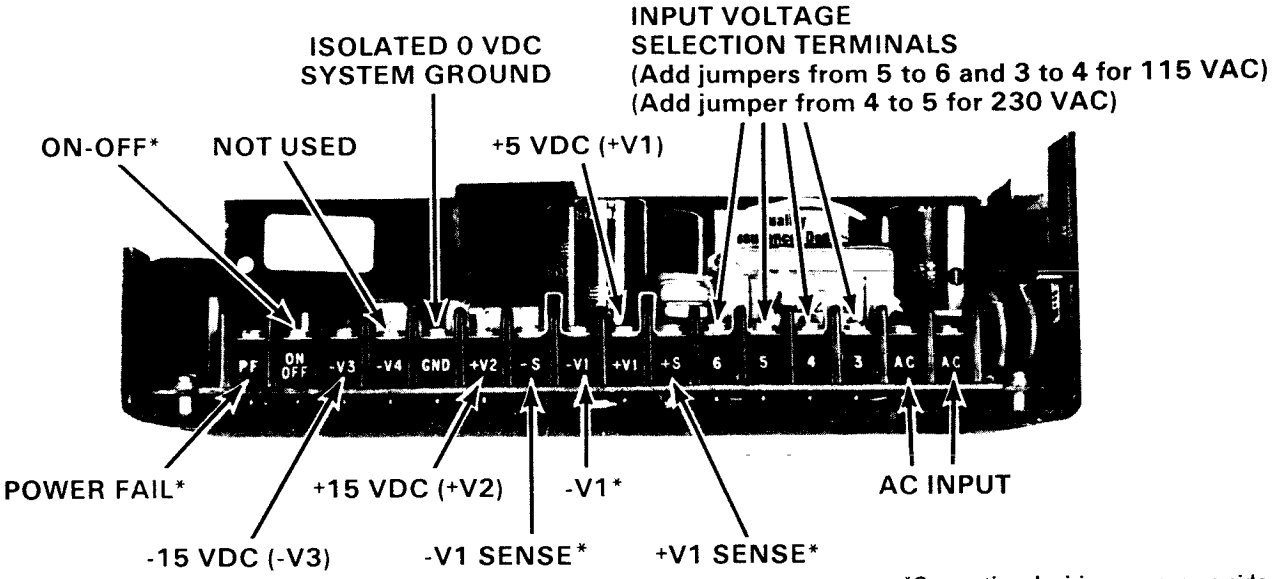

*See optional wiring on reverse side.

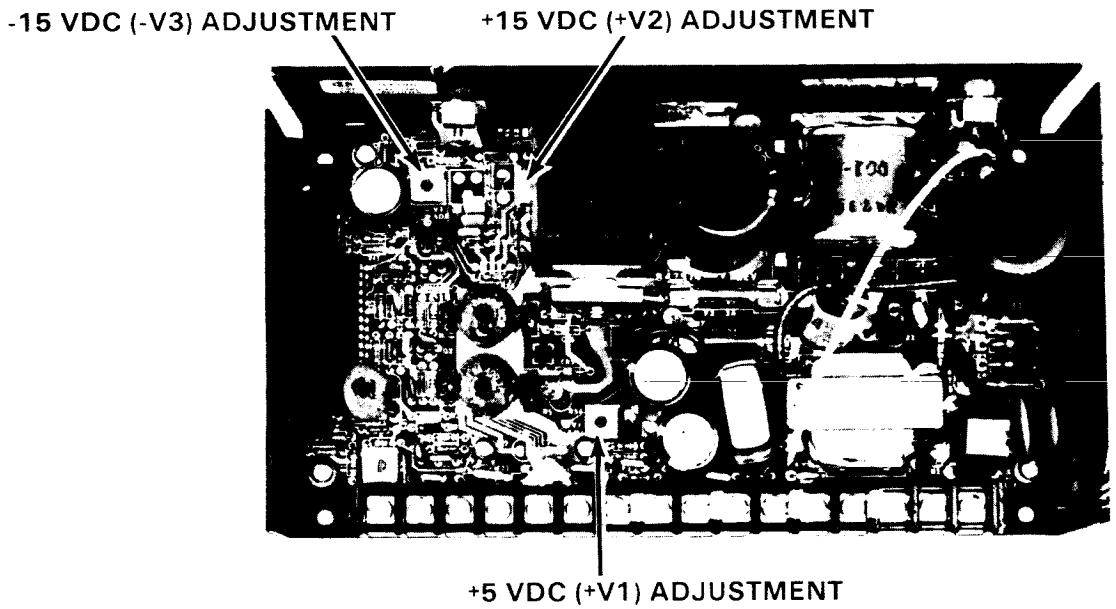

PiC409 POWER SUPPLY WIRING DIAGRAM

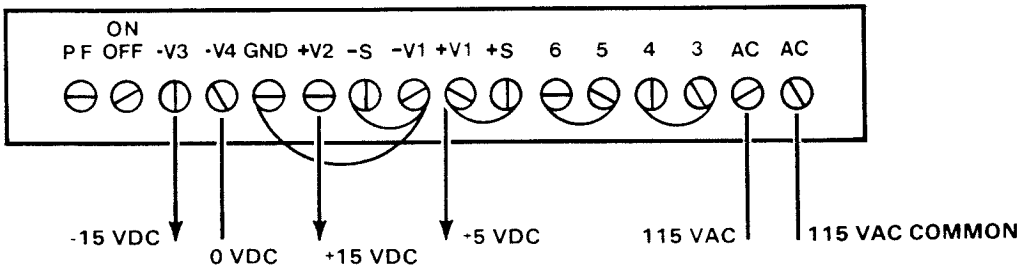

OPTIONAL WIRING

NEGATIVE 5 VOLTS

The power supply can provide –5 volts DC or +5 volts DC but not both at the same time. For –5 volts DC, disconnect the jumper from GND to –V1. Connect a jumper from GND to +V1. The –5 volts DC will now be supplied from –V1.

POWER FAIL

Terminal PF supplies a logic 1 for 16 milliseconds if AC power is lost.

ON-OFF

Grounding the terminal labeled ON/OFF will shut off the power supply.

REMOTE SENSE

Local sense is factory installed. If remote sense is desired, disconnect local sense jumpers (–S to –V1 and +S to +V1). Using 22 AWG twisted pair not exceeding ten feet, connect the +S terminal to the positive point on the load and the -S terminal to the negative point on the load.

PiC409 POWER SUPPLY SPECIFICATIONS

OUTPUT POWER

100 Watts Maximum

OUTPUT

+5 Volts DC at 12 Amps
–5 Volts DC at 12 Amps
+15 Volts DC at 1.5 Amps
–15 Volts DC at 1.5 Amps

OVER VOLTAGE

V1 only set at 125% ±5%

HOLD-UP TIME

20 msec in regulation minimum, after removal of nominal AC input.

VOLTAGE ADJUST RANGE

±5% minimum V1, V2 and V3

COOLING

Convection

INPUT FUSE

User to supply 4 amp 3AG fuse.

EFFICIENCY

Up to 80%, 65% typical

PARD (ripple and noise)

1% p-p or 50 mV, whichever is higher.

INPUT VOLTAGE

85-130 volts AC or 170-260 volts AC. 47-440 Hz. Input voltage is selectable by jumpers on terminal block.

STORAGE TEMPERATURE

–55°C TO +85°C

LIMITED IN-RUSH CURRENT

The AC input in-rush current is limited to 42A RMS when averaged over one cycle.

LINE REGULATION

0.4% for 10% to full load on V1.
1.0% for 10% to full load on V2
1.0% for 10% to full load on V3.

OVERSHOOT AND UNDERSHOOT

2% maximum deviation with a load change of 25% at 5A/usec. No overshoot or undershoot during AC turn on or turn off.

OPERATING TEMPERATURE

0°C to 50°C full power.

Derates linearly to 50% power at 70°C.

REMOTE SENSE

Remote sense will compensate for up to 250 mV of lead cable drop on main output. Output is internally sensed if the sense leads are opened. Provided on primary output only.

MINIMUM LOAD

3A in V1 required to ensure regulation of auxiliary outputs. However, lack of minimum load will not damage supply.

RECOMMENDED CONTROL TRANSFORMER AND NOISE FILTER

Use a .5 KVA or larger control transformer to isolate grounds.

Use an ISLATROL®[1] No. I-155/U noise filter (G&L part no. 401-53038-00) between the control transformer and this power supply.

Refer to Section 3 of this manual for more information about control transformers and ISLATROL® FILTERS.

1 ISLATROL® is a registered trademark of Control Concepts Corporation

POWER DERATING CURVE

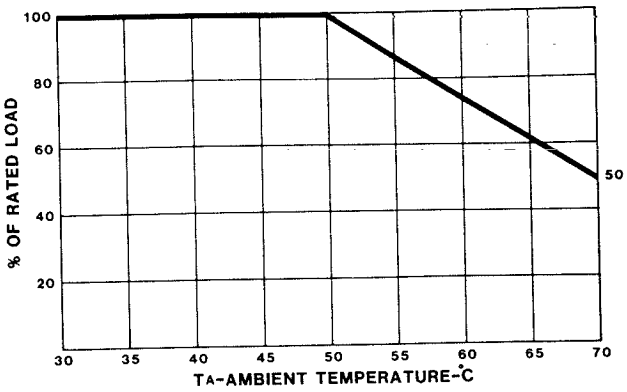

POWER ON/OFF SEQUENCE

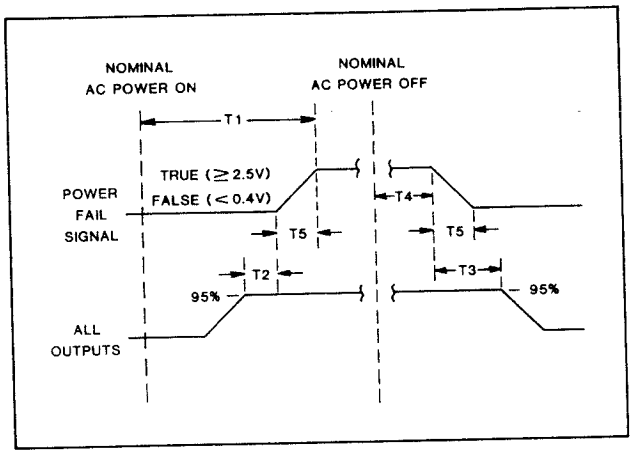

T1<1.0 Sec.
T2>10 mSec.
T3>2 mSec
T4>16 mSec (T4>0 mSec when remote on/off is used)
T5<1 uSec
Power fail (0) sink current = 2 mA maximum
Power fail (1) source current = 400uA maximum

LH RESEARCH TM23-133/115

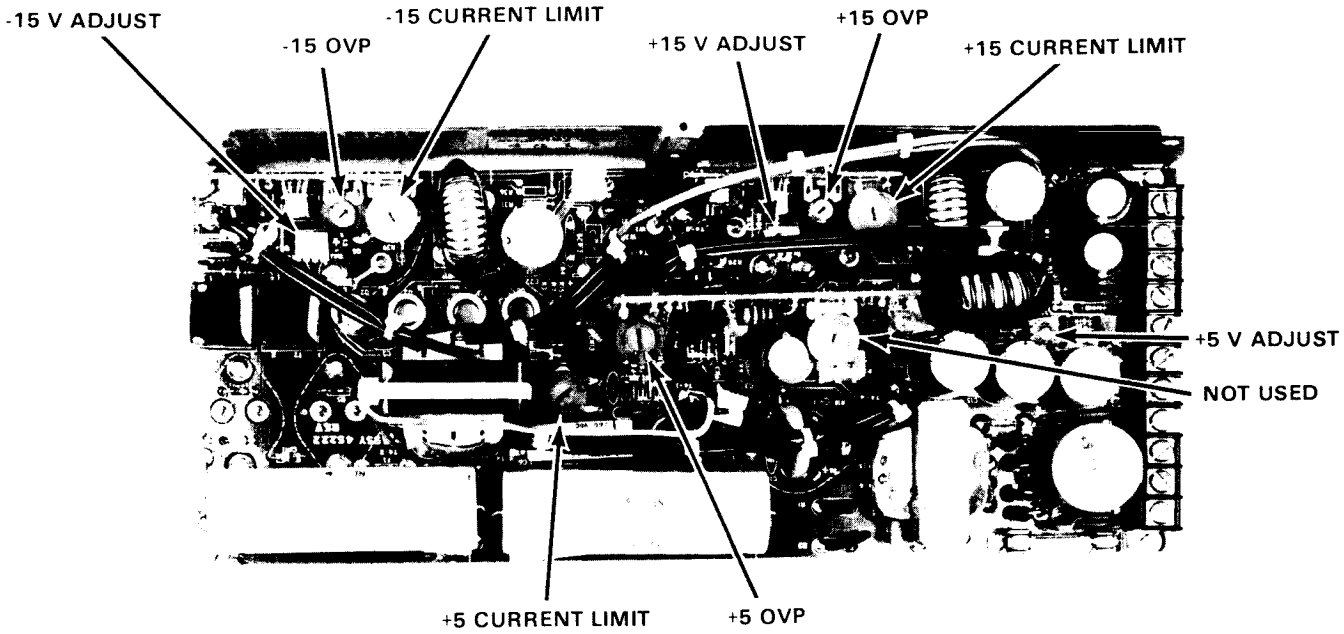

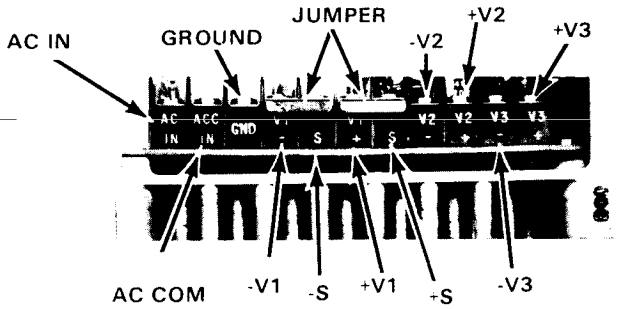

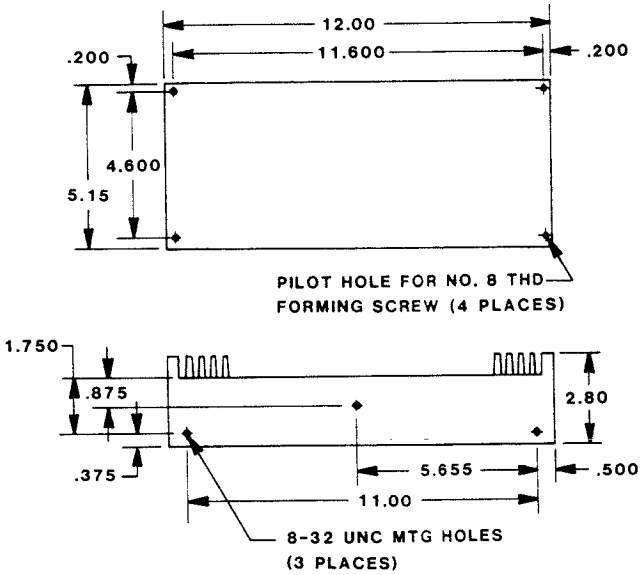

A000158

LH TM23-133/115 POWER SUPPLY DIMENSIONAL DRAWING

SPECIFICATIONS

INPUT

115 VAC: 92-130 VAC, 47-450 Hz
230 VAC: 184-260 VAC, 47-450 Hz

OUTPUT

5 VDC at 20 Amp
+15 VDC at 4 Amp
-15 VDC at 4 Amp
Note: a minimum load of 2.5A is required on the 5VDC output to maintain voltage on the other outputs.

REGULATION

Line: 0.4% on each output over entire range.
Load: 0.4% for no-load to full-load on each range.

INTERACTION

0.1% max (static)

RIPPLE & NOISE

5V: 50 mV p-p max
±15V: 100 mV p-p max

OVERVOLTAGE PROTECTION

5V output

OVER/UNDERSHOOT

2% max deviation for a 25% load change at 5A/uS.

RESPONSE

200 uS to 1% after a 25% load change at 5A/uS for 5V output. 50 uS for ±15V outputs.

HOLDUP

Outputs remain in regulation for a minimum of 20 ms after loss of nominal AC power.

TEMPERATURE

Full load 0°C tp 50°C with natural convection. Derate to 50% at 70°C.

EFFICIENCY

70% nominal

REMOTE SENSE

Remote Sense will compensate for up to 5% of nominal voltage for load cable loss. Output is internally sensed if the sense leads are open. Remote Sense applicable for the 5V output only.

REMOTE ON/OFF

Power supply is turned on with an open circuit or a TTl logic "1", and is turned off with a TTL logic "0" (0.8V max) sinking 400 uA referenced to 5V output negative sense terminal.

CURRENT LIMIT

All outputs have foldback current limit with automatic recovery after overload is removed.

TEMP. COEFFICIENT

±0.0%/°C

STORAGE TEMP

-55° to +85°C

POWER DERATING CURVE

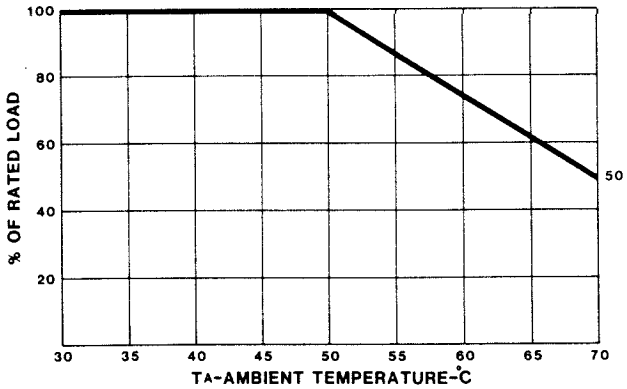

POWER ON/OFF SEQUENCE

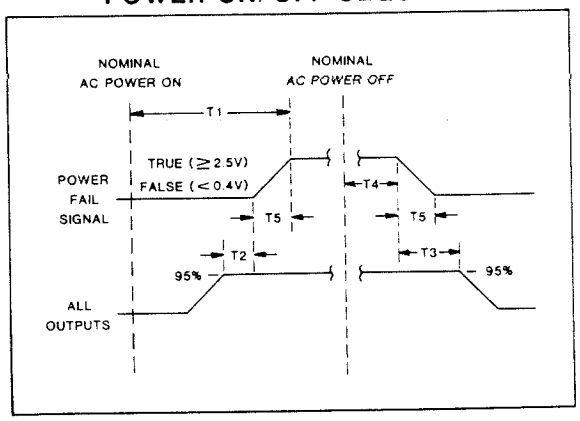

T1<1.0 Sec.
T2>10 mSec.
T3>2 mSec
T4>16 mSec (T4>0 mSec when remote on/off is used)
T5<1 uSec
Power fail (0) sink current = 2 mA maximum
Power fail (1) source current = 400uA maximum

POWER/MATE EMA24C

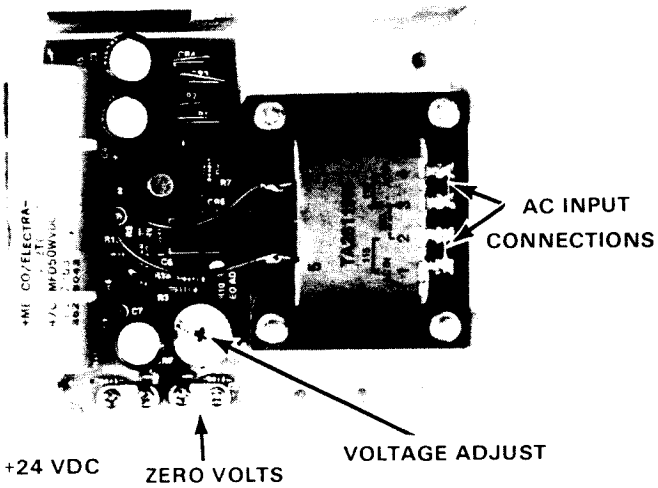

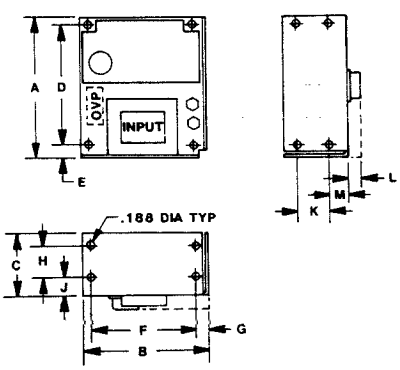

A	5.62
B	4.87
C	2.50
D	4.88
E	.50
F	4.13
G	.50
H	1.25
J	.75
K	1.25
L	.45 MAX
M	.75

A000159

POWERMATE EM-24C POWER SUPPLY DIMENSIONAL DRAWING

SPECIFICATIONS

INPUT

105 to 125 VAC or 210 to 250 VAC at 47 to 63 Hz. Derate output current 10% for 50 Hz operation.

OUTPUT

24 VDC at 2.3A from 0°‡C to +40°C. Derate from full output at +40°C to 65% at +71°C.

REGULATION

Line: 0.05% for a 10% input voltage change.
Load: 0.1% for a zero to full load change.

RIPPLE

MAX 1mV RMS; typical 3mV p-p.

OVERLOAD PROTECTION

Seld-restoring feedback current limiting.

TEMP COEFFICIENT

±0.02%/°C max.

COOLING

Convection

MOUNTING

Any one of three surfaces.

INPUT CONNECTIONS

115 VAC: Jumper transformer terminals 1 and 2, and terminals 3 and 4. Connect AC to terminals 1 and 4. (Figure 1).
230 VAC: jumper transformer terminals 2 and 3. Connect AC to terminals 1 and 4. (Figure 2).

SENSING

FACTORY wired jumpers for local sensing (Figure 3). Remote sensing accomplished by opening jumpers and connecting sense leads to load. (Figure 4.)

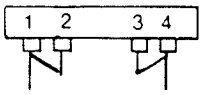

FIGURE 1
115 VAC

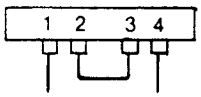

FIGURE 2
230 VAC

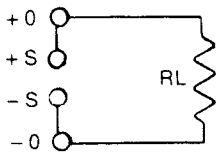

FIGURE 3
Local Sensing

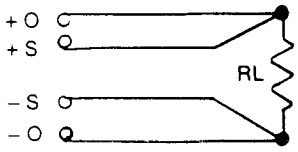

FIGURE 4
Remote Sensing

SCH. REF.	PMC PART NO.	DESC.
C1	CE147263	4700 MFG 50V
C3	CE265700	220 MFD 50V
C4	CE625700	220 MFG 50V
C5	CT247500	4.7 MFG 35V
C6	CD310200	0.001 MFD 500V
C7	CE625700	220 MFD 50V
CR1	DR039000	5A 100V
CR2	DR039000	5A 100V
CR3	DR039000	5A 100V
CR4	DR039000	5A 100V
CR5	DR003000	1A 200V
CR6	DR003000	1A 200V
CR7	DR039000	5A 100V
CR8	DZ211600	1N4752AG
IC1	QI001500	IC
Q1	QS055000	2N2102
Q2	QP001300	64502
R1	RE222100	220 OHM 2W 5%
R2	RE215200	1.5K OHM 3W 5%
R3	RC311500	1.15K OHM 2W 1%
R5	RB227200	2.7K OHM 1/4W 5%
R6	RB262100	620 OHM 1/4W 5%
R7	RB212300	12K OHM 1/4W 5%
R8	RF200240	0.24 OHM 3W 5%
R9	RB233200	3.3K OHM 1/4W 5%
R10	RB220201	2K OHM 3W 20%
R11	RC315001	1.5K OHM 1/2W 1%
R12	RC311500	1.15K OHM 1/2W 1%
R13	RB210000	100 OHM 1/4W 5%
R14	RB210000	10 OHM 1/4W 5%
R15	RB222100	220 OHM 1/4W 5%
T1	TA2811905	TRANSFORMER

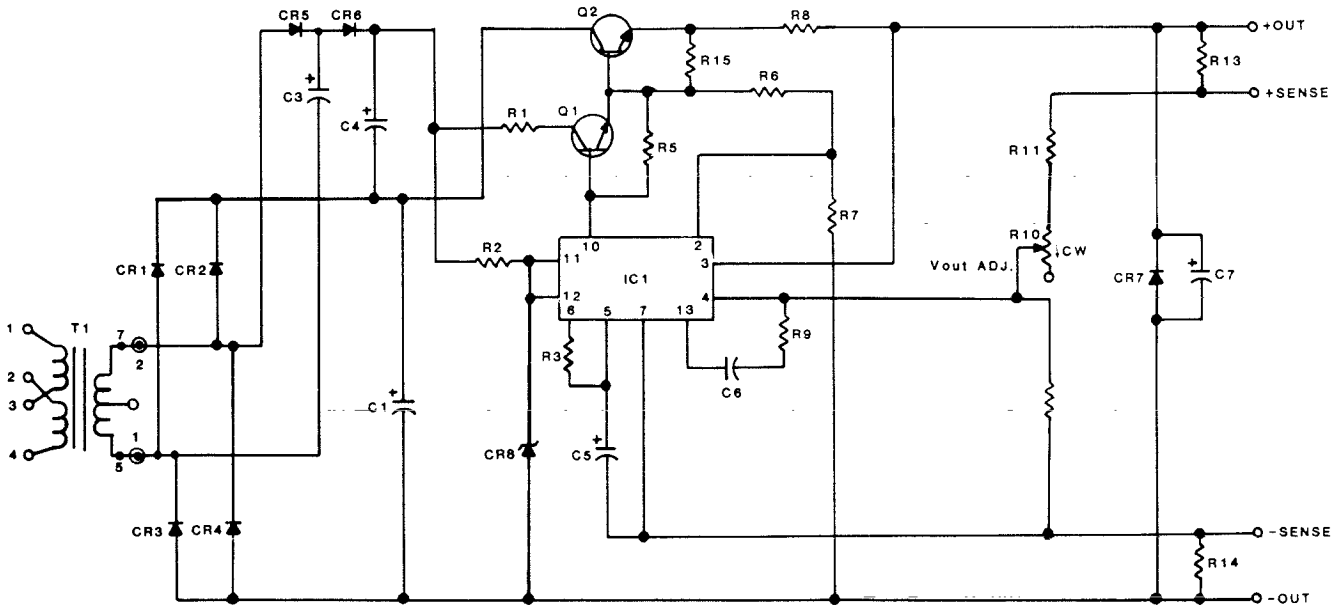

CONVERTER CONCEPTS VST 75-3799

Power Supply For PiC49

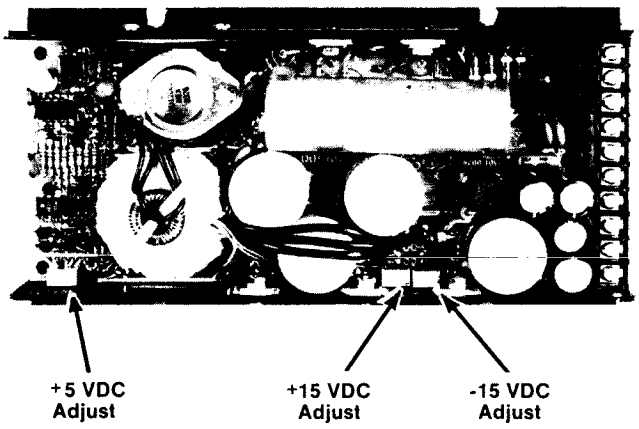

FIGURE 1. POWER SUPPLY ADJUSTMENTS

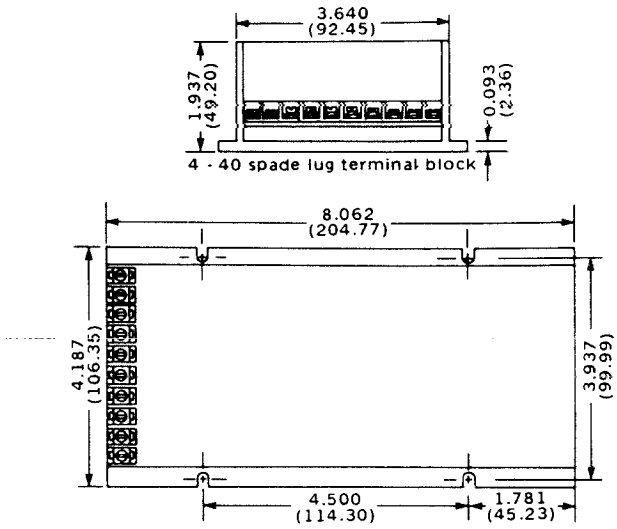

FIGURE 2. POWER SUPPLY DIMENSIONS

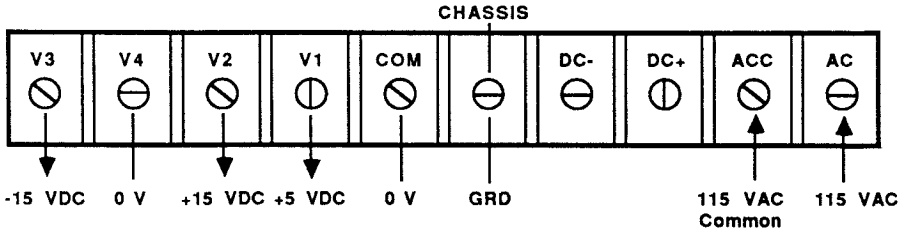

FIGURE 3. POWER SUPPLY WIRING DIAGRAM

PiC49 POWER SUPPLY SPECIFICATIONS

INPUT

90-250 Volts AC, 44-440 Hz

OUTPUT

+5 Volts DC at 10 Amps
+15 Volts DC at 0.8 Amps
-15 Volts DC at 0.8 Amps

TRANSIENT RESPONSE (all outputs)

2 milliseconds with 50% load change

CURRENT LIMIT

All ouputs have foldback current limit with automatic recovery after the overload is removed.

REGULATION

Line: 0.1% for all outputs
Load: 0.5% for +5 volts DC output (2 Amps to full load)
0.2% for +15 volts DC output
0.2% for -15 volts DC output

RIPPLE AND NOISE

25 mV (all outputs)

MINIMUM LOAD

A 2 Amp load is required for V1 (+5 volts DC) to ensure proper regulation for V2 (+15 volts DC) and V3 (-15 volts DC). However, the lack of a minimum load will not damage the power supply.

RECOMMENDED CONTROL TRANSFORMER AND NOISE FILTER

Use a .5 KVA or larger control transformer to isolate grounds.

Use an ISLATROL®[1] No. I-155/U noise filter (G&L part no. 401-53038-00) between the control transformer and this power supply.

Refer to Section 3 of this manual for more information about control transformers and ISLATROL® FILTERS.

1 ISLATROL® is a registered trademark of Control Concepts Corporation

APPENDIX C

PROGRAM LOADERS

GIDDINGS & LEWIS
ELECTRONICS

STR LINK II

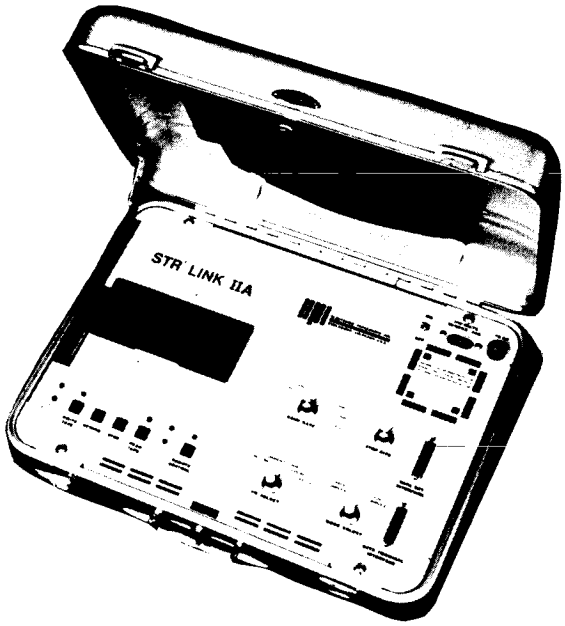

FIGURE 1. STR LINK II

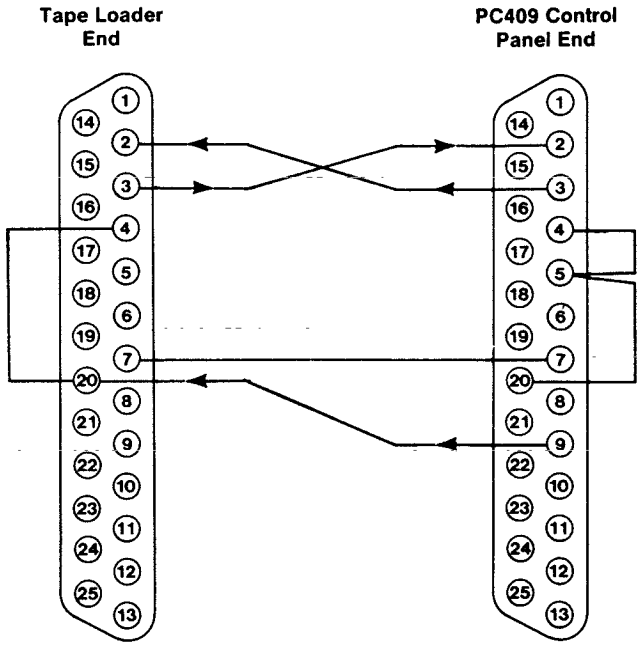

TAPE LOADER PIN NO.	WIRE DESCRIPTION	PC409 PIN NO.
2	Transmit data from PC409	3
3	Transmit data from Loader	2
7	Signal ground	7
4-20	Jumper	
	Jumpers	4-5, 5-20
20	Request to send	9

LOADER CABLE SCHEMATIC

A. INTRODUCTION

The STR-LINK II is a microprocessor controlled cassette storage device that is used by the PC to load, verify, and record serial data. This instruction sheet briefly describes how to connect, configure, and operate the STR-LINK II with the PC. More detailed information about the STR-LINK II is available in the documentation provided by Electronic Processors, Inc.

B. CONNECTION

B1. LOADER CABLE

Data is transmitted between the PC and the STR-LINK II via a loader cable, part number 503-15726-08 or 503-15726-25 (08 denotes 8 foot length, 25 denotes 25 foot length). The loader cable has a 25-pin plug on both ends. Attach one plug to the LOADER Socket located on the PC Control Panel. Attach the other plug to the DATA TERMINAL INTERFACE Socket located on the STR-LINK II.

B2. POWER CABLE

A power cable should be provided with the STR-LINK II. Connect the socket end of the power cable to the power plug on the STR-LINK II. Connect the plug end of the power cable to the power source required to operate the STR-LINK II. The STR-LINK II may be configured to operate with either a 115 volt ac power source or a 230 volt ac power source.

C. CONFIGURATION

The following procedure must be performed to enable communication between the PC and the STR-LINK II.

1. Place the STOP BITS Switch, located on the front panel of the STR-LINK

II, in the 1 position.

2. Place the MODE SELECT Switch, located on the front panel of the STR-LINK II, in the HALF DUPLEX position.

3. Place the I/O SELECT Switch, located on the front panel of the STR-LINK II, in the RS232 position.

4. Place the BAUD RATE Switch, located on the front panel of the STR-LINK II, in the 1200 position.

5. Place the BAUD RATE LOADER Switch, located on the PC Control Panel, in the 1200 position.

6. The internal switches are accessed by removing the loader from its portable case. Refer to the documentation provided by Electronic Processors, Inc. for the proper removal procedure and the location of the switches. Set the switches as indicated in FIGURE 2, and replace the loader in its case.

7. Place the POWER Switch, located on the front panel of the STR-LINK II, in the ON position.

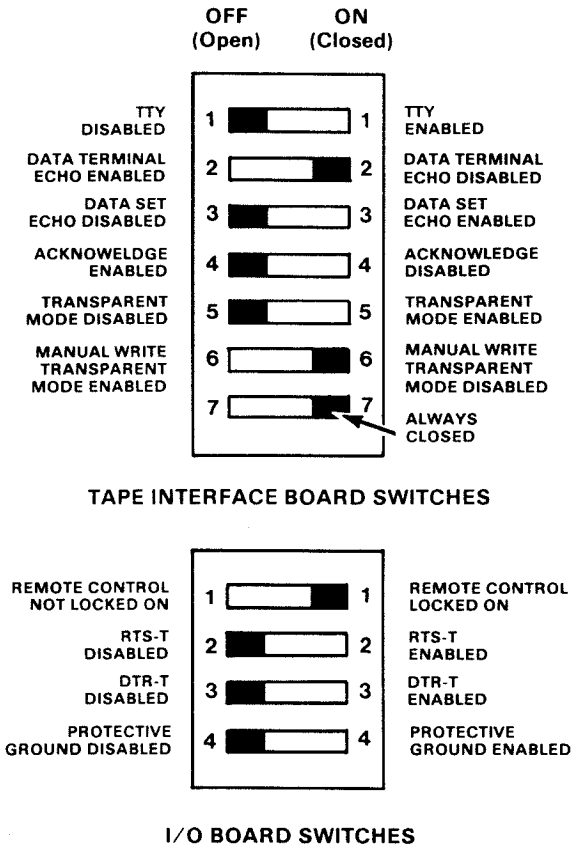

Peripheral devices purchased from G&L Electronics for use with the PC409 do not require internal switch adjustments. If this equipment was purchased from a different source, the switches may have to be reset. Refer to the documentation provided with the peripheral equipment for the proper method of locating these switches.

FIGURE 2. INTERNAL SWITCHES

D. OPERATION

After all connections and switch settings are verified to be as described in paragraphs B and C, a tape may be inserted into the STR-LINK II. When the LOAD, RECORD, or VERIFY Modes are activated, the tape will automatically rewind (if required). After the tape is rewound, the operation corresponding to the selected mode will be performed. The status or the operation will be indicated by the STATUS Lights on the PC Control Panel. SECTION 4 describes how to activate the LOAD, RECORD, and VERIFY Modes and also provide a description of the STATUS Lights.

STR LINK III

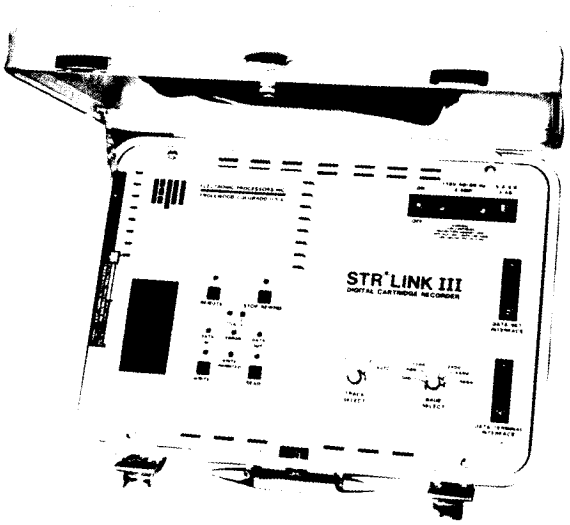

FIGURE 1. STR LINK III

A. INTRODUCTION

The STR-LINK III is a microprocessor controlled tape cartridge storage device that is used by the PC to load, verify, and record serial data. This instruction sheet briefly describes how to connect, configure, and operate the STR-LINK III with the PC. More detailed information about the STR-LINK III is available in the documentation provided by Electronic Processors, Inc.

B. CONNECTION

B1. LOADER CABLE

Data is transmitted between the PC and the STR-LINK III via a loader cable, part number 503-15726-08 or 503-15726-25 (08 denotes 8 foot length, 25 denotes 25 foot length). The loader cable has a 25 pin plug on both ends. Attach one plug to the LOADER Socket located on the PC Control Panel. Attach the other plug to the DATA TERMINAL INTERFACE Socket located on the STR-LINK III.

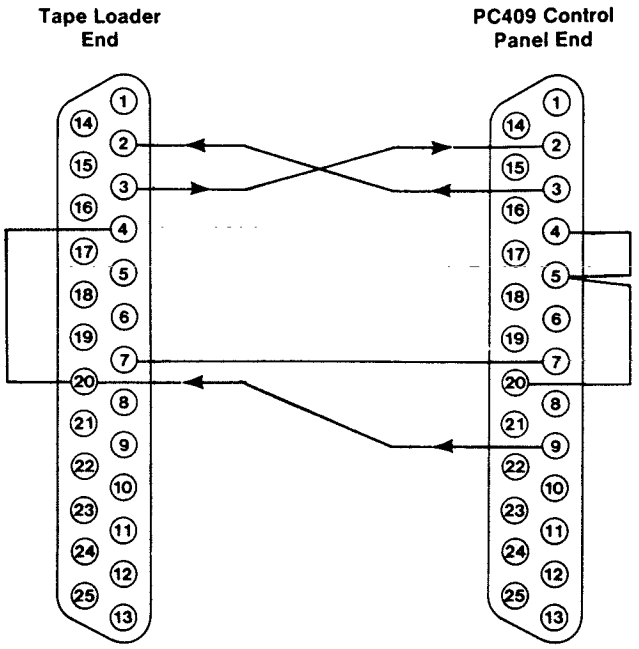

TAPE LOADER PIN NO.	WIRE DESCRIPTION	PC409 PIN NO.
2	Transmit data from PC409	3
3	Transmit data from Loader	2
7	Signal ground	7
4-20	Jumper	
	Jumpers	4-5, 5-20
20	Request to send	9

LOADER CABLE SCHEMATIC

B2. POWER CABLE

A power cable should be provided with the STR-LINK III. Connect the socket end of the power cable to the power plug on the STR-LINK III. Connect the plug end of the power cable to the power source required to operate the STR-LINK III. The STR-LINK III may be configured to operate with either a 115 volt ac power source or a 230 volt ac power source.

C. CONFIGURATION

The following procedure must be performed to enable communication between the PC and the STR-LINK III.

1. Place the BAUD RATE Switch, located on the front panel of the STR-LINK III, in the 9600 position.

2. Place the BAUD RATE LOADER Switch, located on the front panel of the PC Control Panel, in the 9600 position.

3. Place the TRACK SELECT Switch, located on the front panel of the STR-LINK III, in either the 1 or the 2 position. The track selected determines the track (top or bottom) of the tape that will be utilized.

4. The data transfer characteristics of the STR-LINK III are established according to the setting of ten Internal Switches. The Internal Switches are accessed by lifting the cover that surrounds the cartridge drive. The cover is hinged at the rear edge. Raise the cover by lifting the front edge which is secured by spring-loaded clamps that engage a pair of metal guide posts. Depress the sides (OPEN or CLOSED) of the Internal Switches that are darkened in FIGURE 2. After the Internal Switches have been set, lower and secure the cover.

MANUAL WRITE TRANSPARENT	NO MANUAL WRITE TRANSPARENT	1
NO EARTH GROUND	EARTH GROUND	2
RETRY	NO RETRY	3
NO CONTROL CHARACTERS	CONTROL CHARACTERS	4
NO CONTROL LINES	CONTROL LINES	5
TTY ENABLE	TTY DISABLE	6
CURRENT LOOP	RS232	7
ECHO	NO ECHO	8
ON LINE	OFF LINE	9
HALF DUPLEX	FULL DUPLEX	10

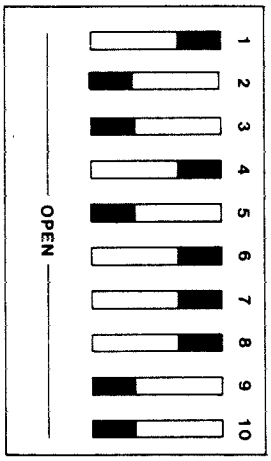

Peripheral devices purchased from G&L Electronics for use with the PC409 do not require internal switch adjustments. If this equipment was purchased from a different source, the switches may have to be reset. Refer to the documentation provided with the peripheral equipment for the proper method of locating these switches.

A000177

FIGURE 2. INTERNAL SWITCHES

5. Place the POWER Switch, located on the front panel of the STR-LINK III, in the ON position.

D. OPERATION

After all connections and switch settings are verified to be as described in paragraphs B and C, a tape may be inserted into the STR-LINK III. The tape will automatically rewind (if required) after being inserted. After the tape is rewound, depress the REMOTE Button, located on the front panel of the STR-LINK III. The LED above the REMOTE Button should be illuminated. When the REMOTE LED is illuminated, the LOAD, RECORD, and VERIFY Mode may be activated. The operation corresponding to the selected mode should immediately begin after mode activation. The status of the operation will be indicated by the STATUS Lights on the PC Control Panel. SECTION 4 describes how to activate the LOAD, RECORD, and VERIFY Modes and also provides a description of the STATUS Lights.

APPENDIX D

TERMINALS

GIDDINGS & LEWIS
ELECTRONICS

LEAR SIEGLER ADM-3A

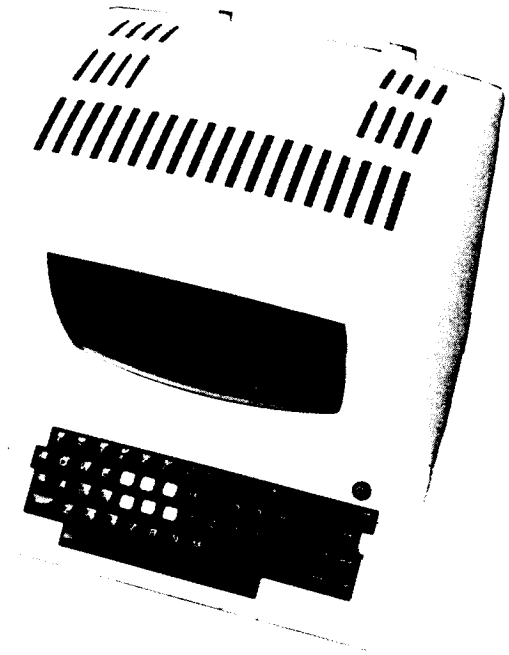

FIGURE 1. ADM-3A

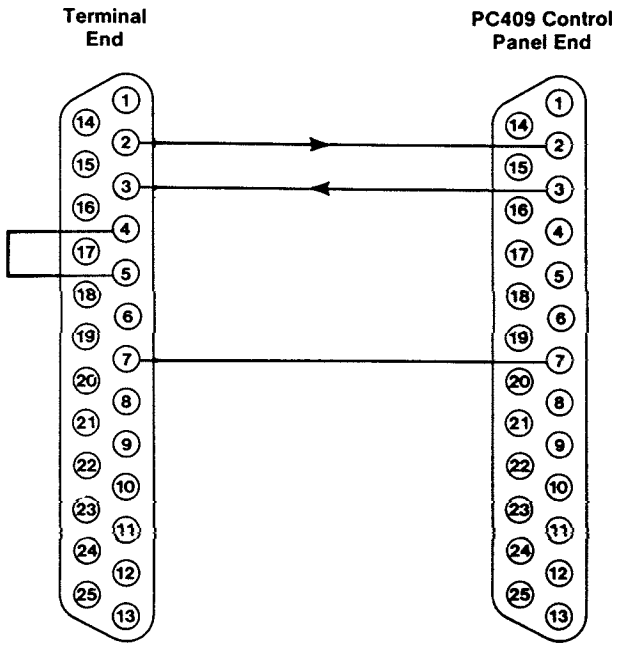

TERMINAL PIN NO.	WIRE DESCRIPTION	PC409 PIN NO.
2	Transmit data from Terminal	2
3	Transmit data from PC409	3
7	Signal ground	7
4-5	Jumper	

TERMINAL CABLE SCHEMATIC

A. INTRODUCTION

The Lear Siegler ADM-3A is an interactive device that is used to communicate with the PC. This instruction sheet briefly describes how to connect, configure, and operate the ADM-3A with the PC. More detailed information about the ADM-3A is available in the documentation provided by Lear Siegler, Inc.

B. CONNECTION

B1. TERMINAL CABLE

Data is transmitted between the PC and the ADM-3A via a terminal cable, part number 503-15725-08 or 503-15725-25 (08 denotes 8 foot length, 25 denotes 25 foot length). The terminal cable has a 25 pin plug on both ends. Attach one plug to the TERMINAL Socket located on the PC Control Panel. Attach the other plug to the MODEM Socket located on the rear of the ADM-3A.

B2. POWER CABLE

The power cable emanates from the rear of the ADM-3A. After the switches are set as described in paragraph C, plug the power cable into the power source required to operate the ADM-3A. The ADM-3A may be configured to operate with either a 115 volt ac power source or a 230 volt ac power source.

C. CONFIGURATION

The following procedure must be performed to enable communication between the PC and the ADM-3A:

1. Ensure that the power cable is disconnected from the AC power source.

2. Remove the cover of the ADM-3A. The cover is removed by unscrewing the two slot-head screws located under the front corners of the base. After the screws are removed, lift the hinged cover upwards and rearwards.

3. Fourteen Internal Switches are located near the back edge of the exposed circuit board. The six switches on the left are designated S4, the switch in the middle is designated S8, and the seven switches on the right are designated S5. Depress the sides (ON or OFF) of the S4 and S5 Switches that are darkened in FIGURE 2. Slide S8 upward into the LK position.

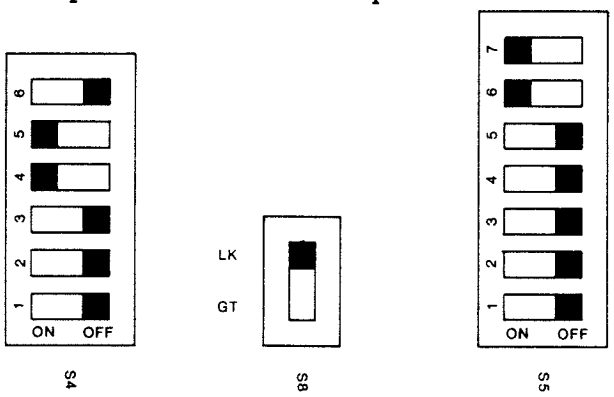

Peripheral devices purchased from G&L Electronics for use with the PC409 do not require internal switch adjustments. If this equipment was purchased from a different source, the switches may have to be reset. Refer to the documentation provided with the peripheral equipment for the proper method of locating these switches.

A000277

FIGURE 2. INTERNAL SWITCHES

4. Replace the cover.

5. Twenty Front Panel Switches are located beneath the nameplate, adjacent to the keyboard. A slot-head screw is used to secure the nameplate. Depress the sides (ON or OFF) of the Front Panel Switches that are darkened in FIGURE 3. The lower 11 switches select the desired baud rate. In FIGURE 3, the maximum baud rate of 19200 has been selected. A lower baud rate may be selected, if desired. Replace the nameplate after the Front Panel Switches are set.

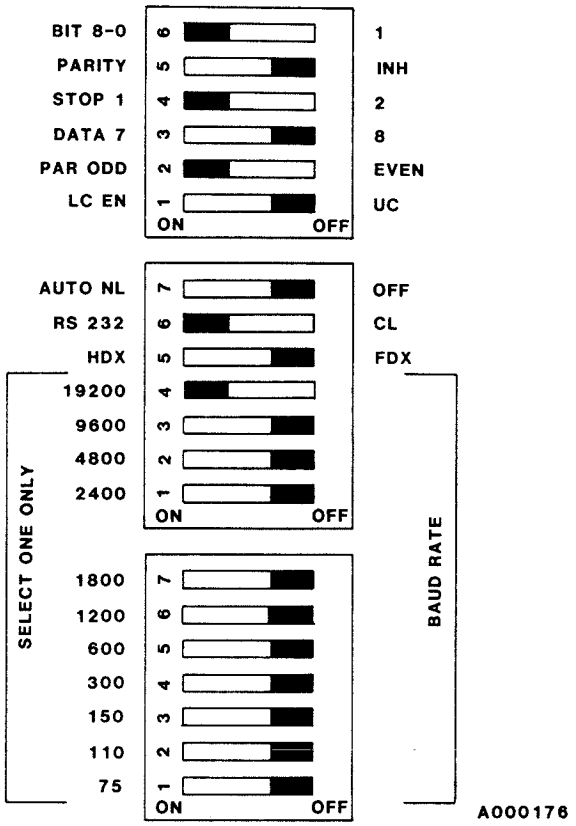

FIGURE 3. FRONT PANEL SWITCHES

6. Set the BAUD RATE TERMINAL Switch, located on the PC Control Panel, to the same baud rate that was selected by the Front Panel Switches.

7. Connect the power cable to the ac power source.

8. Place the POWER Switch, located on the rear of the ADM-3A, in the ON position.

D. OPERATION

After all connections and switch settings have been verified to be as described in paragraphs B and C, the ADM-3A may be used to communicate with the PC. The active PC mode of operation determines what type of information will be transferred between the PC and the terminal.

TELEVIDEO 910 PLUS

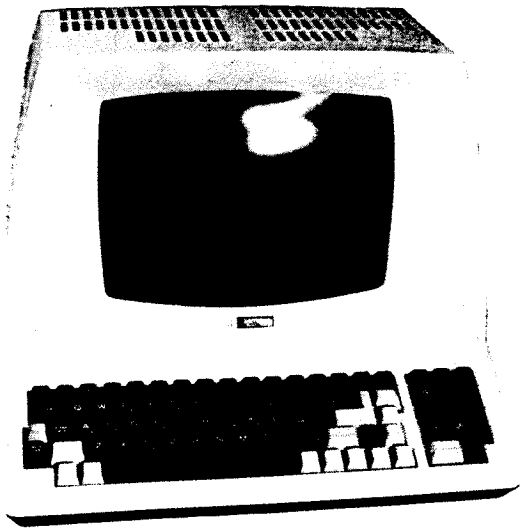

FIGURE 1. 910 PLUS

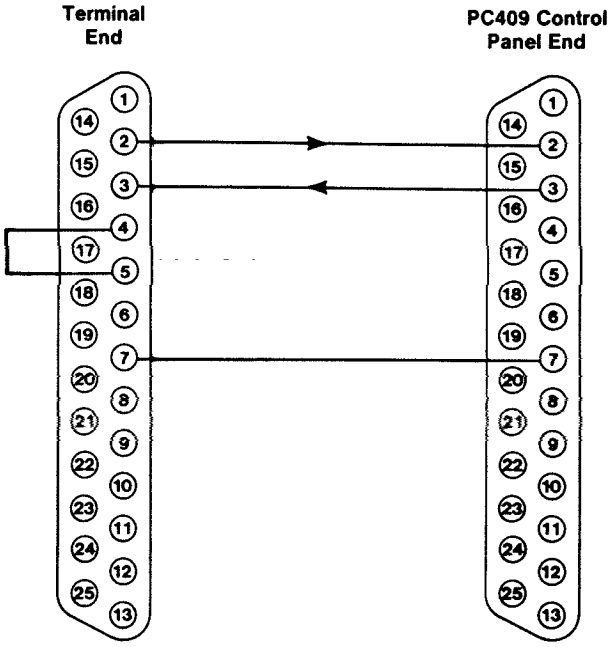

TERMINAL PIN NO.	WIRE DESCRIPTION	PC409 PIN NO.
2	Transmit data from Terminal	2
3	Transmit data from PC409	3
7	Signal ground	7
4-5	Jumper	

TERMINAL CABLE SCHEMATIC

A. INTRODUCTION

The Televideo Model 910 Plus is an interactive device that is used to communicate with the PC. The instruction sheet briefly describes how to connect, configure, and operate the Model 910 Plus with the PC. More detailed information about the Model 910 Plus is available in the documentation provided by Televideo, Inc.

B. CONNECTION

B1. TERMINAL CABLE

Data is transmitted between the PC and the Model 910 Plus via a terminal cable, part number 503-15725-08 or 503-15725-25 (08 denotes 8 foot length, 25 denotes 25 foot length). The terminal cable has a 25 pin plug on both ends. Attach one plug to the TERMINAL Socket located on the PC Control Panel. Attach the other plug to the P3 (RS232) Socket located on the rear of the Model 910 Plus.

B2. POWER CABLE

The power cable emanates from the rear of the Model 910 Plus. Plug the power cable into the power source required to operate the Model 910 Plus. The Model 910 Plus may be configured to operate with either a 115 volt ac power source or a 230 volt ac power source.

C. CONFIGURATION

The following procedure must be performed to enable communication between the PC and Model 910 Plus:

1. Ten switches are located on the rear of the Model 910 Plus that are designated S1 (BAUD RATE). Depress the side (UP or DOWN) of the S1

(BAUD RATE) Switches that are darkened in FIGURE 2. Switches 1 through 4 should be set according to the desired baud rate.

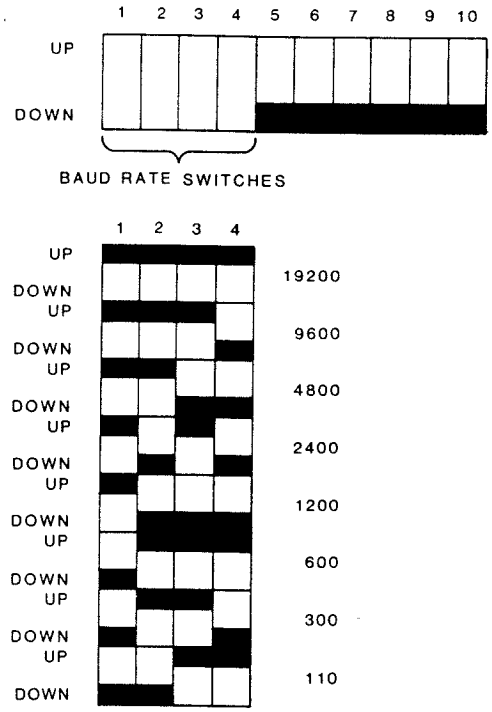

Peripheral devices purchased from G&L Electronics for use with the PC409 do not require internal switch adjustments. If this equipment was purchased from a different source, the switches may have to be reset. Refer to the documentation provided with the peripheral equipment for the proper method of locating these switches.

A000276

FIGURE 2. S1 (BAUD RATE) SWITCHES

2. Set the BAUD RATE TERMINAL Switch, located on the PC Control Panel, to the same baud rate that was selected by the S1 (BAUD RATE) Switches.

3. Ten switches are located on the rear of the Model 910 Plus that are designated S2 (FUNCTION). Depress the sides (UP or DOWN) of the S2 (FUNCTION) Switches that are darkened in FIGURE 3.

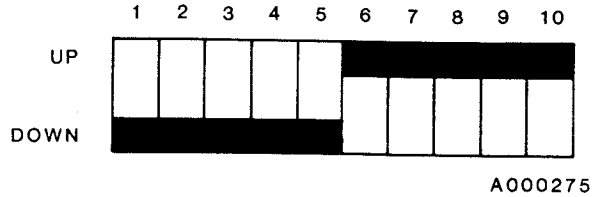

FIGURE 3. S2 (FUNCTION) SWITCHES

4. Depress the ALPHA LOCK Key, located on the terminal keyboard, so that all alpha keys transmit codes for upper case characters only.

5. Place the POWER Switch, located on the rear of the Model 910 Plus, in the ON position.

D. OPERATION

After all connections and switch settings have been verified to be as described in paragraphs B and C, the Model 910 Plus may be used to communicate with the PC. The active PC mode of operation determines what type of information will be transferred between the PC and the terminal.

TEXAS INSTRUMENTS SILENT 700

FIGURE 1. SILENT 700

A. INTRODUCTION

The Texas Instruments Silent 700 is an interactive device that is used to communicate with the PC. This instruction sheet briefly describes how to connect, configure, and operate the Silent 700 with the PC. More detailed information about the Silent 700 is available in the documentation provided by Texas Instruments, Inc.

B. CONNECTION

B1. TERMINAL CABLE

Data is transmitted between the PC and the Silent 700 via a terminal cable. The terminal cable that is supplied with the Silent 700 may be used. The terminal cable has a 25 pin plug on one end and a 15 pin plug on the other end. Attach the 25 pin plug to the TERMINAL Socket located on the PC Control Panel. Attach the 15 pin socket to the corresponding plug located on the rear of the Silent 700.

B2. POWER CABLE

A power cable should be provided with the Silent 700. Connect the socket end of the power cable into the power cable plug on the rear of the Silent 700. Connect the plug end of the power cable to a 115 volt ac power source.

C. CONFIGURATION

The following procedure must be performed to enable communication between the PC and the Silent 700:

1. Place the right side of the LOW SPEED Switch, located on the front panel of the Silent 700, in the down position.

2. Place the left side of the ON-LINE Switch, located on the front panel of the Silent 700, in the down position.

3. Place the right side of the HALF DUP Switch, located on the front panel of the Silent 700, in the down position.

4. Place the right side of the NUM Switch, located on the front panel of the Silent 700, in the down position.

5. Place the BAUD RATE TERMINAL Switch, located on the PC Control Panel, in the 300 position.

6. Place the POWER Switch, located on the front edge of the Silent 700, in the ON position.

D. OPERATION

After all connections and switch settings have been verified to be as described in paragraphs B and C, the Silent 700 may be used to communicate with the PC. The active PC mode of operation determines what type of information will be transferred between the PC and the terminal.

APPENDIX E

PRINTERS

GIDDINGS & LEWIS
ELECTRONICS

OKIDATA MICROLINE 82A

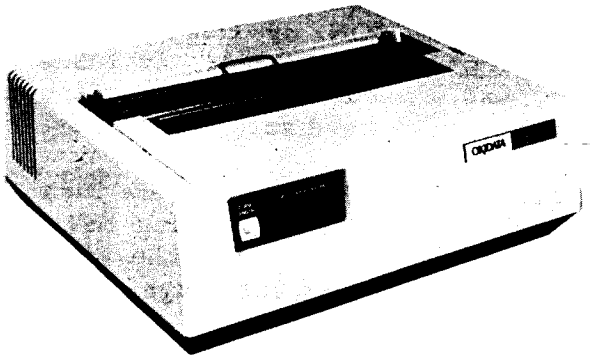

FIGURE 1. MICROLINE 82A

A. INTRODUCTION

The Okidata Microline 82A may be used to make a printed record of data in PC memory. This instruction sheet briefly describes how to connect, configure, and operate the Microline 82A with the PC. More detailed information about the Microline 82A is available in the documentation provided by Okidata, Inc.

B. CONNECTION

B1. RS-232-C CABLE

Data is sent to the Microline 82A via a RS-232-C cable, part number 503-15728-08 or 503-15728-25 (08 denotes 8 foot length, 25 denotes 25 foot length). The RS-232-C cable has a 25 pin plug on both ends. Attach one plug to the socket located on the faceplate of the RS-232-C Interface Module. Attach the other plug to the serial interface socket located on the rear of the printer. The serial interface socket may be hidden by a blank cover that must be removed to gain access to the socket. Two slot-head screws are used to secure the blank cover.

NOTE

When using a printer or a GTEK EPROM programmer, the RS-232-C Interface Module address switch setting must be 2236.

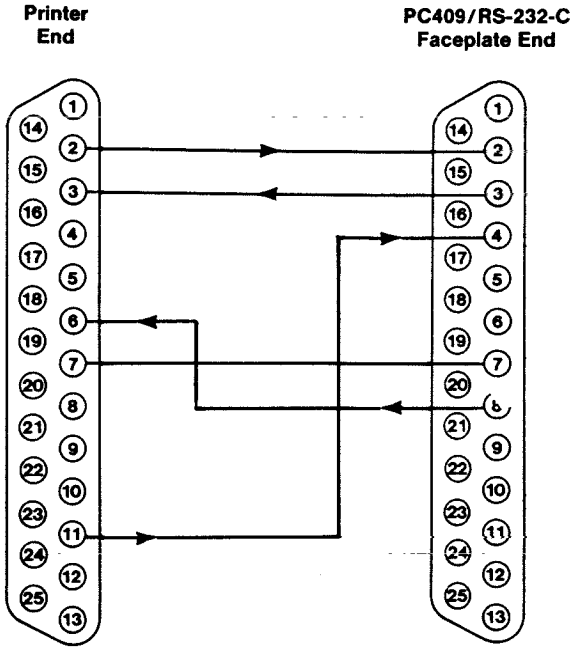

PRINTER PIN NO.	WIRE DESCRIPTION	RS-232-C PIN NO.
2	Transmit data from Printer	2
3	Transmit data from PC409	3
6	Data set ready	8
7	Signal ground	7
11	Request to send	4

PRINTER/RS-232-C INTERFACE CABLE SCHEMATIC

B2. POWER CABLE

A power cable emanates from the rear of the Microline 82A. After the switches are set as described in paragraph C, plug the power cable into a 115 volt ac power socket.

C. CONFIGURATION

The following procedure must be performed to enable communication between the PC and the Microline 82A.

1. Ensure that the power cable is disconnected from the ac power source.

2. Remove the printer cover. The cover

is removed by first removing the platen knob. With the platen knob removed, unscrew the slot-head screws located in the top front corner of the cover. After the screws are removed, lift the cover upwards and rearwards until the cover is released from the hooks in the back of the printer.

3. Eight Front Panel Switches are located adjacent to the operator's controls on the front face of the printer. Slide the Front Panel Switches into the positions (ON or OFF) that are darkened in FIGURE 2.

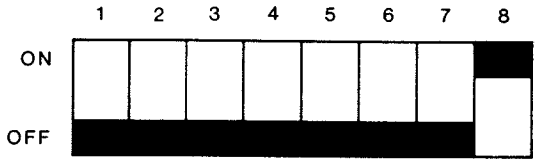

A000273

FIGURE 2. FRONT PANEL SWITCHES

4. Six Serial Interface Switches are located on the circuit board facing the rear of the terminal. Slide the Serial Interface Switches into the positions (ON or OFF) that are darkened in FIGURE 3. Switches 2, 3, and 4 should be set according to the desired baud rate.

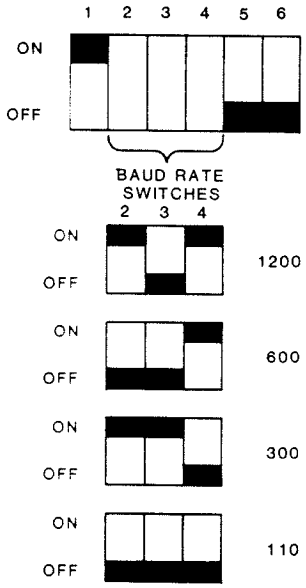

Peripheral devices purchased from G&L Electronics for use with the PC409 do not require internal switch adjustments. If this equipment was purchased from a different source, the switches may have to be reset. Refer to the documentation provided with the peripheral equipment for the proper method of locating these switches.

A000278

FIGURE 3. SERIAL INTERFACE SWITCHES

5. Two plugs, SP1 and SP2, are located on the circuit board facing the rear of the printer. Place the jumpers on the A side of the plugs as shown in FIGURE 4.

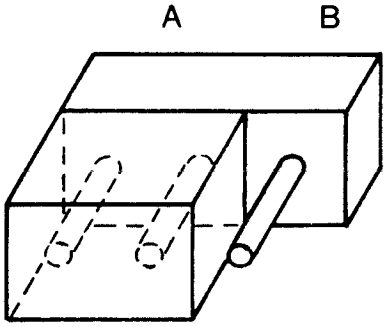

A000274

FIGURE 4. SIDE A JUMPERED

6. Replace the cover and platen knob.

7. Set the Baud Rate Switch, located on the faceplate of the RS-232-C Interface Module, to the same baud rate selected by Serial Interface Switches 2, 3, and 4.

8. Connect a terminal to the PC. Instruction Sheets for various terminals are provided in APPENDIX D to aid in terminal connection.

9. Connect the power cable to the ac power source.

10. Place the POWER Switch, located on the rear of the Microline 82A, in the ON position.

D. OPERATION

After all connections and switch/jumper settings are verified to be as described in paragraphs B and C, the Microline 82A may be used to print data in either the PROGRAM Mode or AUX. 2 Mode. When the proper mode is active, printer

operation is enabled by simultaneously depressing the CRTL Key and the P Key on the terminal. The message "PRINTER ON" should be displayed on the terminal when the printer is enabled. The printer is disabled when either the PROGRAM Mode or AUX. 2 exited or the CRTL Key and P Key are simultaneously depressed again. The message "PRINTER OFF" will be displayed on the terminal. The message "PRINTER ON" should be displayed on the terminal when the printer is disabled. SECTION FOUR describes how to activate the PROGRAM Mode and AUX. 2 Mode.

NOTE

The message "SINT ERR" will be displayed on the terminal if a serial interface error is encountered. Refer to SECTION 6 for a list of the possible causes and solutions.

OKIDATA MICROLINE 182

A. INTRODUCTION

The Okidata Microline 182 may be used to make a printed record of the data in the PiC's memory. It may also be used to make listings using the GLLADD software with an IBM PC or compatible personal computer. The printer must have the serial interface option to work with the G&L PiC. However, the standard parallel interface may be used with IBM PC's or compatible computers.

These instructions briefly describe how to connect, configure and operate the Microline 182 with the PiC. If you are using this printer with a personal computer or if you need additional information, refer to the Microline 182 Printer Handbook.

B. CONNECTIONS

B1. RS-323C CABLE

Data is sent to the printer from a G&L RS-232C interface module, part number 502-02833-20. A Serial Communications Faceplate, part number 502-03266-00 should be attached to the front edge of this module. The faceplate and the printer are connected by an RS–232C cable, part number 503-15728-08 or 503-15728-25 (-08 denotes an eight-foot cable, -25 denotes a 25-foot cable).

The RS-232C cable has a 25 pin plug on both ends. Attach the PiC end of cable to the socket located on the Serial Communications Faceplate on the RS-232C Interface Module. Attach the other end to the serial interface socket located at the rear of the printer.

NOTE

When using a printer (or a GTEK EPROM programmer), the RS-232C Interface Module address switch setting must be 2236.

B2. POWER CABLE

After the switches are set as described in Section C, plug the power cable into a 115 volt AC power outlet. If you are using a PiC409, use one of the convenience outlets located on the front of the PiC409 cabinet.

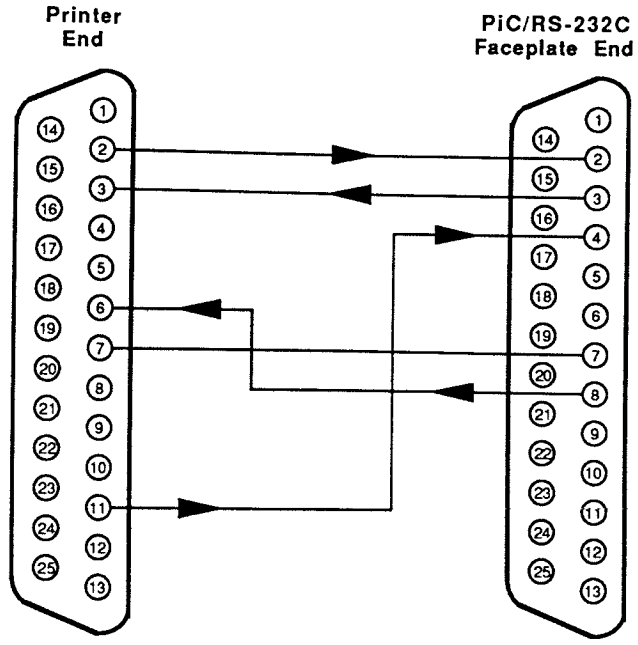

PRINTER PIN NO.	WIRE DESCRIPTION	RS-232C PIN NO.
2	Transmit Data From Printer	2
3	Transmit Data From PiC	3
6	Data Set Ready	8
7	Signal Ground	7
11	Request to Send	4

FIGURE 1 PRINTER RS-232C INTERFACE CABLE SCHEMATIC

C. CONFIGURATION

The following procedure must be performed to enable communication between the PiC and the Microline 182 printer.

1. Ensure that the power cable is disconnected from the AC power source.

2. Use a small, phillips head screwdriver to remove the screw from the internal switch access cover. This is the small cover located on the top of the printer (towards the rear of the unit). Remove the cover to expose the configuration switches.

3. The eight switches closest to the opening are the Serial Interface Board Switches. The switches

on the board below it are the Control Circuit Board Switches. Set the switches as indicated in the following diagrams. Replace the cover and the screw.

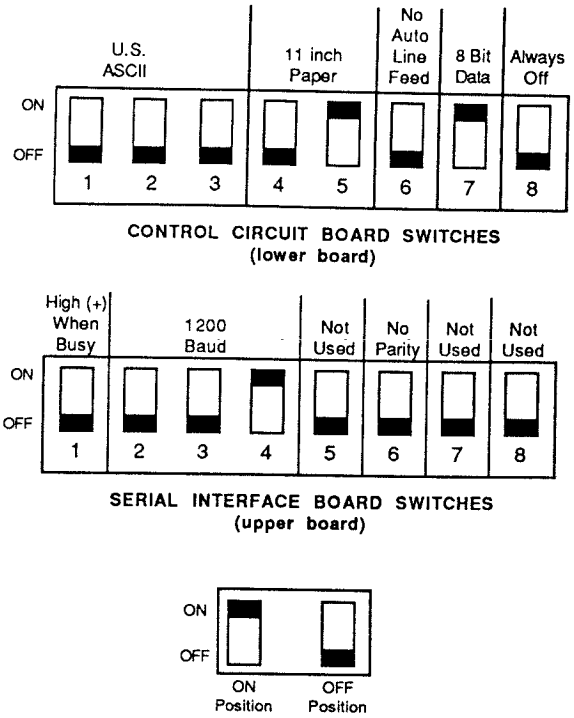

FIGURE 2 INTERNAL PRINTER SWITCH SETTINGS

4. Set the Baud Rate switch on the Serial Communications Faceplate to the same baud rate selected by the Serial Interface board switches (the switch settings shown indicate 1200 baud).

5. Connect a terminal to the PiC Control Panel Terminal Port. Instruction sheets for various terminals are provided in APPENDIX D to aid in connecting the terminals.

6. Connect the power cable to the AC power outlet.

7. Place the power switch, located on the right side of the printer, in the ON position.

8. Insert printer paper and set the Top of Form as instructed in the Microline 182 Printer Handbook.

9. Press the SEL button on the front panel after setting the Top of Form to turn on the SEL light (if it is not on already).

D. OPERATION

D1. ENABLE PRINTER

After verifying that all of the connections and switch settings comply with the instructions described in Sections B and C, the Microline 182 may be used to print data in either the PROGRAM Mode or the AUX 2 mode. When the proper mode is active, printer operation is enabled by pressing the "CTRL" and "P" keys simutaneously.

The message "PRINTER ON" should be displayed on the terminal screen when the printer is enabled.

D2. DISABLE PRINTER

The printer can be disabled by exiting the PROGRAM or AUX 2 Mode or by simultaneously pressing the "CTRL" and "P" keys a second time. The message "PRINTER OFF" will be displayed on the screen.

Section 4 describes how to activate the PROGRAM and the AUX 2 Modes.

NOTE

The message "SINT ERR" will be displayed on the terminal if a serial interface error is encountered. Refer to Section 6 for a list of possible causes and solutions.

APPENDIX F

EPROM PROGRAMMERS

GIDDINGS & LEWIS
ELECTRONICS

GTEK 7128 EPROM PROGRAMMER

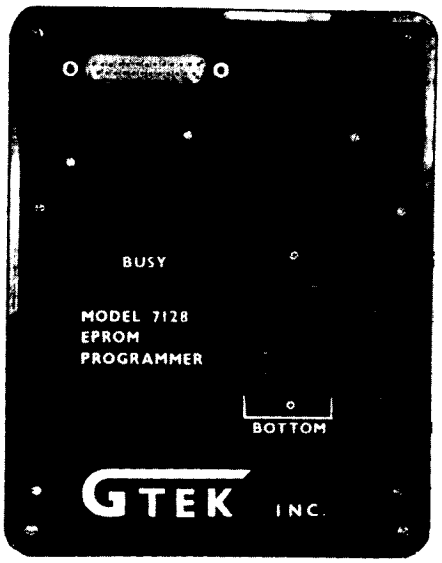

FIGURE 1 GTEK 7128 EPROM PROGRAMMER

A. INTRODUCTION

The GTEK EPROM Programmer allows the user to store data from PiC memory onto EPROM chips. This instruction sheet describes how to connect, configure, and operate the GTEK Model 7128 with the PiC. More detailed information about the Model 7128 is available in the documentation provided by GTEK, Inc.

B. REQUIRED HARDWARE

B.1. RS-232C CABLE

Data is sent to the Model 7128 via an RS-232C cable. The user can fabricate a cable or buy one ready-made from G&L for use with the Serial Communications Faceplate. To fabricate a cable, refer to Figure 2 and Table 1 when using a Serial Communications Faceplate on the RS-232C Interface Module. Refer to Figure 3 and Table 2 to fabricate a cable when using a card edge connector on the RS-232C Interface Module.

To order a cable from G&l, the cable part number is 503-15727-08 or 503-15727-25. The last two digits of the part number indicate the length of the cable in feet; "08" indicates an 8-foot length, and "25" indicates a 25-foot length. The RS-232C cable has a 25-pin plug on both ends.

B.2. RS-232C INTERFACE MODULE

The PiC must contain an RS-232C Interface Module. The RS-232C cable runs between the GTEK EPROM Programmer and the RS-232C Interface Module. The RS-232C Interface Module must have either a Serial Communications Faceplate or a card edge connector affixed to it.

B.3. PROGRAMMING TERMINAL OR PERSONAL COMPUTER

You must use either a terminal or a personal computer that is running G&L's GLLADD software package. When using a personal computer, the computer must be put in the terminal mode via GLLADD.

NOTE

Set the RS-232C Interface Module address switch to address 2236 for use with the GTEK EPROM Programmer.

C. SETUP

The following procedure must be followed to enable communications between the PiC and the GTEK Model 7128:

1. Connect a terminal or suitable personal computer with GLLADD software to the terminal socket on the PiC faceplate. Information on connecting various terminals is provided in Appendix D of the PiC409 Family User's Manual. Information regarding the terminal mode of GLLADD can be found in the GLLADD User's Manual.

2. Set the baud rate on the RS-232C Interface Module to 1200 baud. This is performed by using one of the following procedures.

   When a Serial Communications Faceplate is Used

   A. Set the rotary baud select switch on the RS-232C Interface Module to 0. See the RS-232C Interface Module write-up in Appendix A of the PiC409 Family User's Manual for more information.

B. Set the rotary baud select switch on the Serial Communications Faceplate to 1200 baud.

When a Card Edge Connector is Used

A. Set the rotary baud select switch on the RS-232C Interface Module to position 4 (1200 baud). See the RS-232C Interface Module write-up in Appendix A of the PiC409 Family User's Manual for more information.

3. Plug the GTEK 7128 power cord into a suitable power source. The GTEK 7128 can be configured to operate with either a 120V or 230V ac power source.

4. Connect one end of the RS-232C cable to the D-connector on the GTEK 7128 faceplate. Connect the other end to the faceplate or card edge connector on the RS-232C Interface Module.

5. Apply power to the GTEK 7128 and the PiC.

6. Place the Mode switch on the PiC Control Panel in the AUX 2 position. Status Light 1 on the Control Panel should begin to blink.

7. Momentarily depress the Initialize Button on the PiC Control Panel. This activates the AUX 2 Mode. Status Light 1 will extinguish.

D. OPERATION

After all connections and switch settings are verified to be as described in paragraphs B and C, the GTEK 7128 can be used to store data onto EPROM. The program called the EPROM Programmer should be selected from the menu displayed on the computer or terminal. A description of how to use the EPROM Programmer software is provided in Section 8 of the PiC409 Family Programming Manual.

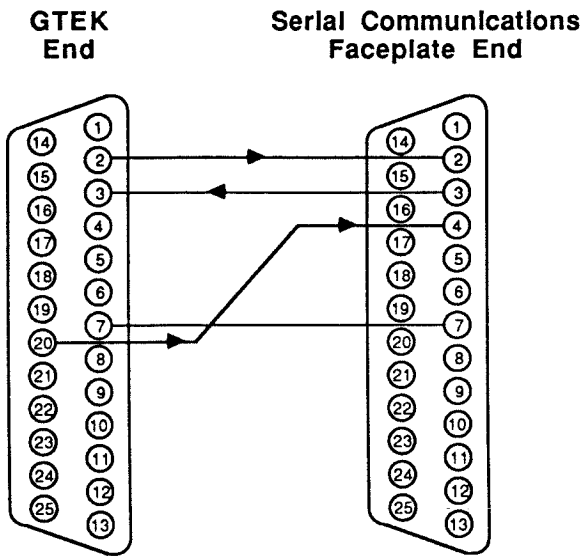

FIGURE 2. CABLE SCHEMATIC FOR GTEK 7128 TO SERIAL COMMUNICATIONS FACEPLATE

GTEK PIN NO.	WIRE DESCRIPTION	FACEPLATE PIN NO.
2	Transmit Data From GTEK	2
3	Transmit Data From PiC	3
7	Signal Ground	7
20	Request to Send From GTEK	4

TABLE 1 GTEK TO FACEPLATE WIRING

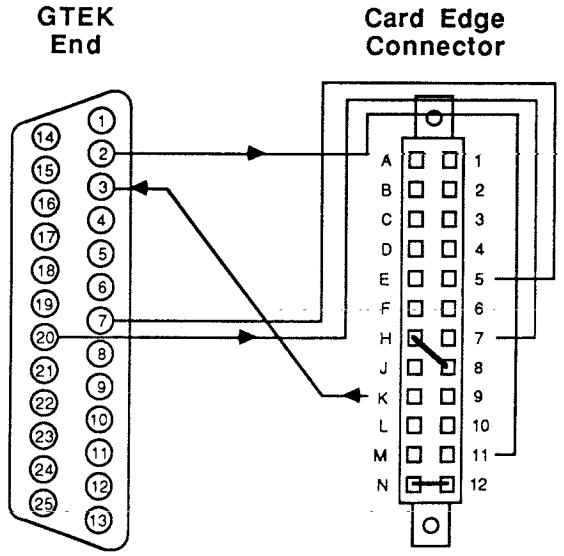

FIGURE 3. CABLE SCHEMATIC FOR GTEK 7128 TO CARD EDGE CONNECTOR

GTEK PIN NO.	WIRE DESCRIPTION	CARD EDGE PIN NO.
2	Transmit Data From GTEK	11
3	Transmit Data From PiC	K
7	Signal Ground	5
20	Request to Send From GTEK	7

Jumper H to 8 and N to 12 on the Card Edge Connector.

TABLE 2 GTEK TO CARD EDGE CONNECTOR WIRING

APPENDIX G

GLOSSARY

GIDDINGS & LEWIS
ELECTRONICS

AC Input Module: Module which senses the presence or absence of various AC signals. The module converts these signals to data levels compatible with the CPU.

AC Output Module: Module which utilizes logic level signals from the CPU to control on-board solid state relays. The relays in turn distribute user supplied AC to the loads.

Acquisition: The process of obtaining information. For example; the Data Acquisition Module collects analog data via an Analog-to-Digital (A/D) converter.

Address: An identification as represented by a name, label, or number for a register, location in storage, or any other data source or destination such as the location of a station in a communication network.

Alternating Current (AC): Current in which the charge-flow periodically reverses direction. Usually expressed in a voltage level such as 120 VAC or 220 VAC.

Ambient Temperature: The temperature in a given environment. For example, the ambient temperature within a control enclosure may be up to 130 ^{o} F., while the room ambient temperature is some lesser value such as 75 ^{o} F.

American Wire Gauge (AWG): A standard system used to designate the size of electrical conductors. Gauge numbers have an inverse relationship to size, i.e. larger numbers have smaller diameter.

Ampacity: The current carrying capacity of a wire or cable expressed in amperes.

Ampere: A unit of electric current flow equivalent to a charge of 1 coulomb past a given cross-sectional area in 1 second.

Analog Input Module: DATA ACQUISITION MODULE or uP DIGITIZING MODULE. An input module which converts analog signals to digital values.

Analog Output Module: Digital/Analog Converter module. An output module which converts digital (binary) number to an analog signal.

Analog Signal: A continuous signal that depends directly on magnitude (voltage or current) to represent some condition. For example; a voltage could represent the speed of a motor: 5 volts corresponding to 200 rpm, 10 volts to 400 rpm, etc.

ANSI: American National Standard Institute.

Application: Any machine or process which is monitored and controlled by a PC by means of a user program.

ASA: American Standards Association.

ASCII: American Standard Code for Information Interchange. Most commonly used code in data transmission includes 128 upper-and-lower-case letters, numerals, and symbols. Each character is defined by a 7-bit binary number.

Asynchronous: A mode of operation in which performance of the next operation is started by a signal that the previous operation has been completed. Contrast with synchronous, characterized by a fixed time cycle for the execution of operations.

Attenuation: The loss of amplitude in a signal as it is transmitted through a conductor.

Background: Software that has a lower priority and is executed by the PC when higher priority or real-time software is not being executed. Typically, the LDN is processed as background.

Backplane: A printed circuit board into which modules are inserted.

Baud: A baud is defined as the reciprocal of the shortest pulse duration in a data word, including start, stop and parity bits. The term bits per second expresses only the number of data bits transferred per second.

BCD: An abbreviation for Binary Coded Decimal. BCD is a system for representing decimal data in binary code. For example; in BCD, 16 would be represented as 0001 (for 1) and 0110 (for 6).

Binary: Binary refers to the base 2 system of numbering ...0 (0), 1 (1), 10 (2), 11 (3), 100 (4), 101 (5), etc. Binary is a system consisting of only two states: 1 or 0, high or low, ON or OFF, etc.

Bit: An acronym for Binary digit. A bit can assume one of two possible states; such as ON or OFF, high or low, logic 1 or logic 0, etc.

Block Diagram: A simplified schematic diagram.

Boolean Equation: An expression of relations between logic functions.

Breakdown Voltage: The voltage at which a disruptive discharge transpires, either through or over the surface of insulation.

Bus: One or more conductors used for transmitting signals or power from one or more sources to one or more destinations.

Byte: A set of adjacent bits, usually eight, that are operated on as a unit.

Cable: A stranded conductor or a combination of conductors insulated from one another.

Call Routine: A special purpose subroutine which performs a function by manipulating user-defined parameters. A call routine is entered as a statement in the LDN.

Card: A module or printed circuit board.

Cascading: A programming technique that extends the range of TIMERS or COUNTERS. This extension is achieved by making a succeeding Timer or Counter dependent upon the accumulation of a number of preceding Timers or Counters.

Cassette Tape: A magnetic recording tape permanently enclosed in a protective housing. Cassettes for the PC should be COMPUTER GRADE.

Character: One symbol of a set of elementary symbols, such as a letter of the alphabet or a decimal numeral.

Chattering: Rapid cyclic action within an electromechanical device such as a relay. Chattering can be caused by either a fault in the device or an incorrectly written user program.

Check Sum: A value which is the arithmetic sum of the bytes in a program or signal transmission. The receiving logic computes a check sum of the received bytes and compares the computed check sum with the transmitted check sum.

Clear: To return a memory to a non-programmed state, usually represented as "0" or OFF.

Clock: A pulse generator that provides the basic timing signals to which all system operations are synchronized.

Clock Rate: The frequency at which the clock operates.

CMOS: An abbreviation for Complimentary Metal-Oxide Semiconductor. A family of very low power integrated circuits.

Coaxial Cable: A type of cable having two conductors, one of which forms a common axis. Since one of the insulated conductors completely surrounds the

other, this type of cable neither generates nor is greatly affected by electrical noise.

Code: A system of symbols for representing data.

Color Code: A color system for component identification.

Compatibility: The ability of various units to replace one another with little or no reduction in capability.

Compiler: A program that translates the source program into machine language by selecting appropriate subroutines. The source progam is typically the user LDN.

Conductor: A wire or strands of wire which are not insulated from one another, and are suitable for carrying an electric current.

Conduit: Solid or flexible metal or other tubing through which insulated electric wires are routed.

Control Relay: A Control Relay is a coil from which contacts are derived. The contacts of the coil act as controlling elements within LDC's. The Control Relay is often labeled CRXXXX where "XXXX" is the numerical label assigned to the Control Relay and the contacts associated with the coil.

CPU: Central Processing Unit. The logic in a system that fetches, decodes and executes programmed instructions, and maintains the status of the results as programs are executed.

Crosstalk: Electrical noise that occurs as a result of signals in one circuit causing interference with the signals in an adjacent circuit.

CRT Terminal: A terminal containing a Cathode Ray Tube to display programs such as ladder diagrams.

Cursor: A position indicator employed in the display of a video terminal to indicate a character that is to be corrected or a position to which data is to be entered.

Cycle: 1) A sequence of operations that is repeated regularly. 2) The time required for one such sequence to occur.

Data: Information, such as the state or condition of a device, or a representation of information, such as a signal or a voltage.

Debugging: Process of detecting, locating and correcting mistakes in hardware or software.

Diagnostic Program: A program to help isolate hardware malfunctions in the programmable controller.

Digital Signal: A discrete signal or set of signals that depends on the presence or absence of some quantity (voltage, current, etc.) to represent some condition. Digital signals are often combined into sets that can be interpreted as numbers. For example; binary voltages (either 0 or 5 VDC) in sets of four (XXXX) could represent the numbers 0 to 15 by using the binary system.

Direct Current (DC): An electric current that only flows in one direction.

Documentation: An orderly collection and recording of hardware and software data such as tables, listings, diagrams, etc. Used to provide reference information for PC application, operation and maintenance.

Duct: A wireway with a removable cover.

Duplex: A means of two-way data communication.

Edit: To deliberately modify the user program in PC memory.

EIA: Electronics Industries

Association, an organization that publishes various recommended standards.

Electrical - Optical Isolator: A device that couples input to output by using a light source and detector that are in the same package. Used to provide electrical isolation.

EMI: Electromagnetic interference.

Enclosure: A surrounding case designed to provide a degree of protection for equipment and personnel.

Encoder: 1) A rotary feedback device which transmits a specific code for each position. 2) A device that transmits a fixed amount of pulses for each revolution.

EPROM: Erasable Programmable Read-Only Memory. A memory device that is used for the storage of non-volatile information. Erasable via exposure to short-wavelength ultraviolet light.

Even Parity: The condition that occurs when the sum of the number of "1's" in a binary word is always even.

Execution Time: The sum total of the amount of time required to complete a given command.

Fault: Any malfunction that interferes with normal application operation.

Feedback: The signal or data sent to the PC from a controlled machine or process to denote response to the command signal.

Field Wiring: The wiring that connects the switches or contact closures to the input modules, and connects the outputs to the respective loads.

Filter: Electrical device used to suppress undesirable electrical noise.

Flag: Flag is the generic term applied to either control relays or the contacts associated with control relays. Flags are used to communicate, either from the programmer to the software or from the software to the programmer. For example: The programmer energizes a relay to flag the software that a particular action is desired. At the completion of the selected action, the software energizes a relay to flag the programmer that the task has been completed.

Foreground: Software which has a high-priority, real-time software. Interrupts are used to acquire the CPU and process foreground. Typically servo software operates as foreground.

Force: A mode of operation in the Real Time Debug program that allows the operator (as opposed to processor) to control the state of a contact, variable or coil.

Frequency: The number of times a given event occurs within a specified period. Usually expressed in Hertz (Hz) or cycles per second (cps).

Full Duplex: A mode of communications in which data may be simultaneously tramnsmitted and received by both ends of the circuitry.

Ground: A conducting connection, intentional or accidental, between an electric circuit or equipment chassis and the earth ground.

Ground Potential: Zero voltage potential with respect to earth ground.

Half Duplex: A mode of data transmission capable of communicating in two directions, but in only one direction at a time.

Hard Copy: Any form of printed document such as a ladder diagram.

Hardware: The mechanical, electrical and electronic devices that compose the programmable controller and associated devices.

Hardware Output: A Hardware Output is an output that is directly wired to a physical device. An example of a hardware output would be an AC output module. Hardware outputs differ from internal relays in that internal relays are not directly connected to a physical device.

Hardwired: Electrical devices interconnected through physical wiring.

Hexadecimal: A means of representing all 16 combinations of four bits of information with a single character 0 through 9 and A-B-C-D-E-F.

Hexadecimal	Binary 8 4 2 1	Decimal
0	0 0 0 0	0
1	0 0 0 1	1
2	0 0 1 0	2
3	0 0 1 1	3
4	0 1 0 0	4
5	0 1 0 1	5
6	0 1 1 0	6
7	0 1 1 1	7
8	1 0 0 0	8
9	1 0 0 1	9
A	1 0 1 0	10
B	1 0 1 1	11
C	1 1 0 0	12
D	1 1 0 1	13
E	1 1 1 0	14
F	1 1 1 1	15

Note: Under the binary heading each bit has been given a weighted value, 8, 4, 2, 1. It should be noted that if a binary 1 appears in the "1" column and the "4" column, 0101, you add the weights of the column 1 + 4 = 5; 1 0 0 1 = 8 + 1 = 9.

IEEE: Institute of Electrical and Electronics Engineers.

Input Circuit: An input circuit is a real-world device (limit switch, transducer, etc.), the associated wiring and input module point to which it is connected. The input module function is to convert field voltage levels (5, 12, 120 volts, etc.) to proper processor signal levels.

Instruction: A command that will cause the PC to perform one certain prescribed operation.

I/O: An abbreviation for Input/Output. For example; a group of input modules and output modules might be referred to as I/O modules.

Interface: A device that transmits data between two non-compatible subsystems that often cannot be directly wired together.

Internal Relay: An Internal Relay is a memory location that is designated to act as a coil. Typically, internal relays are numbered from 0 to 1999.

Interrupt: A technique used to signal the CPU that a higher priority program requires execution. A requirement of real-time systems.

Jumper: A short length of conductor used to make a connection between terminals.

K: Abbreviation for 2^{10} = 1024. For example; 2K bytes - 2048 bytes.

Ladder Diagram: A ladder diagram is a complete control scheme, normally drawn as a series of contact circuits and coils arranged between two vertical control supply lines so that the horizontal lines of contacts appear similar to rungs of a ladder. A ladder diagram is normally the reference document used by the operator when entering the control program.

Language: A set of symbols and rules for representing and communicating information (data) among people, or between people and machines.

Latch: A device that continues to store the state of the input signal after the signal is removed. The input state is stored until the latch is reset.

Latching Relay: A relay constructed so that it maintains a given position until released.

Limit Switch: A switch that is actuated by some part or motion of a machine or equipment to alter the electrical circuit associated with it.

Load: 1) A device intentionally placed in a circuit or connected to a machine or apparatus to absorb power and convert it into the desired useful form. 2) To insert data into the PC.

Logic: A means of solving complex problems through the repeated use of simple functions; such as AND, OR, NOT, etc.

LSD/LSB: Least-significant digit, least-significant bit.

LED: An abbreviation for Light Emitting Diode. A solid-state device that emits light when current of the proper polarity is permitted to flow through it.

Machine Code: The symbols that designate a basic computer operation which are to be performed.

Magnetics: Electromechanical devices such as relays or contactors.

Memory: Any device into which a unit of information can be copied, that will hold this information, and from which the information can be obtained at a later date. Synonymous with storage.

Memory Protect: An on-board feature used to prevent alteration of the contents of RAM memory. Also referred to as write protect.

Microprocessor: An LSI device that performs the functions of the CPU and the control unit of a computer. An LSI device is called a microprocessor because of its extremely small size; typically, contained on a single IC chip.

Microsecond: One millionth of a second.

Millisecond: One thousandth of a second.

Modem: Contraction of MOdulator/DEModulator. A device that transforms digital information into audio tones for transmission over telephone lines, and decodes the audio signals back into digital information when receiving.

Module: Any assembly of interconnected components that constitutes an identifiable device, instrument, or piece of equipment. A module can be disconnected, removed as a unit and replaced with a spare. A module has definable performance characteristics that permit it to be tested as a unit. A module can be a printed circuit board or subassembly of a larger device, provided it meets the requirements of this definition.

Monitor: The process of determining the state or condition of an input, coil or register. Also, a program used to display or change memory contents, CPU register, etc.

Motor Controller: A device or group of devices that serve to govern, in a predetermined manner, the electrical power delivered to a motor.

MSD/MSB: Most-significant digit, most-significant bit.

Multiplex: To carry out multiple functions simultaneously in an independent but related manner. Multiplexing often involves interleaving or otherwise combining several signals so that these signals may be handled by a single device.

National Electrical Code: A set of regulations, established by the National Fire Protection Association, governing construction and installation of electrical wiring and apparatus. Widely used by state and local authorities.

NEMA Standards: Consensus standards for electrical equipment approved by the majority of the members of the National Electrical Manufacturers Association (NEMA).

Noise: Any unwanted electrical disturbance or spurious signal that effects the operation of a system.

Odd Parity: Condition existing when the sum of the number of "1's" in a binary word is always odd.

Operand: Eight of the two numbers used in a basic computation to produce an answer. For example; in the computation 2 x 3 = 6, 2 and 3 are the operands.

Operation Code: The symbols that designate a basic computer operation to be performed.

Output Circuit: An output module point, real-world device (motor starter, digital readout, panel meter, etc.) and associated wiring. The output module function is to convert processor signal levels to field voltage levels.

Parallel: In an LDC, parallel refers to those rungs connected by a branch.

Parameter: A characteristic element, such as a value in a Call Routine.

PC: Abbreviation for Programmable Controller.

Printed Circuit Board: A board on which a predetermined pattern of connections has been formed.

Process: 1) Continuous and regular production executed in a definite manner. 2) A PC application that requires data comparison and manipulation. The PC monitors the input parameters to vary the output values. Contrasted with a machine, a process does not cause mechanical motion.

Processor: The processor performs logic solving, program storage, and special functions within a programmable controller system.

Program: A plan for the automatic solution of a problem.

Protocol: A defined means of establishing criteria for receiving and transmitting data through communication channels.

Pulse: A brief voltage or current surge of measurable duration.

Rack: A chassis that contains modules.

RAM: Random Access Memory, also referred to as read/write memory. Data can be read or written into RAM on command from the processor.

Real-time: The performance of a computation during the actual time that the related physical process or mechanical action transpires so that results of the computation can be used in guiding the process or action.

Relative Humidity: A ratio which expresses the amount of water vapor in the air divided by the amount that would be present if the air were saturated. Used as part of the environmental considerations for a piece of hardware.

Resolution: A measure of the smallest possible increment of change in the variable output of a device.

Resolver: A device for determining angular displacement.

RFI: Radio frequency interference.

ROM: Read-Only Memory. These memories require a special device to program the chip. A ROM does not require power to retain stored information.

RS-232-C: An EIA standard specifying the interface between data terminals and data communications equipment that employs serial, binary data interchange. Maximum distance - 50 ft.

RS-422: An EIA standard for the electrical characteristics of balanced voltage digital interface. Maximum distance - 4,000 ft.

Scan: Microprocessor-based programmable controllers operate in a sequential manner. The sequence is a combination of the executive and user programs. At the end of both programs, the processor returns to the beginning and the scan begins again.

Scan Time: The time required to make one complete scan through memory and to update the status of all inputs and outputs.

Scratch Pad: Usually a small RAM used to temporarily store operational data required by the processor.

Serial Operation: Type of information transfer whereby the bits are handled sequentially rather than simultaneously. Serial operation is slower than parallel operation for equivalent clock rates. However, only one channel is required for serial operations.

Series: In a coil circuit, series refers to two or more adjacent contacts connected to each other.

Servo Mechanism: A device to monitor an operation as it proceeds, and to make necessary adjustments to keep the operation under control.

Shield: Any barrier to the passage of interference - causing electrostatic or electromagnetic fields.

Signal: The event, phenomenon or electrical quantity that conveys information from one point to another.

Software: Set of instructions that make up one or more programs. Specifically, the program that is inserted into the executive and user memories for the purpose of causing the processor to function in a specific manner.

Solenoid: An electromagnet with a movable core or plunger, which, when energized, can move a small mechanical part a short distance.

Start Up: The time between equipment installation and full operation of the system.

Stepping Motor: A bi-directional, permanent magnet motor that turns through one angular increment for each pulse applied.

Strobe: A signal that causes data transfer to take place between I/O modules and memory.

Subroutine: A program that defines desired operations, and may be included in another program to produce the desired operations.

System: A collection of sub-assemblies combined to work as a coordinated unit.

Tachometer: A device for indicating the speed of rotation.

Thumbwheel Switch: A rotating numeric switch used to input numeric information to the PC.

Toggle Switch: A panel-mounted switch with an extended lever.

Transducer: A device used to convert physical parameters; such as temperature pressure, weight, etc., into electrical signals.

Transfer: The process of moving data; 1) From one device, module or register over one or more data lines to another device, module or register. 2) From input to output.

Transfer Line: A manufacturing system in which individual stations are used for dedicated purposes.

Triac: A solid-state component capable of switching AC.

TTL: Abbreviation for transistor-transistor logic.

Twisted Pair: Two insulated wires (signal and return) that are twisted together. Since both wires have nearly equal exposure to interference, the differential noise is slight.

User Memory: Memory where the customer program is stored.

PiC409 FAMILY
PROGRAMMING MANUAL

Giddings & Lewis Electronics
A Giddings & Lewis Company
666 SOUTH MILITARY ROAD
P.O. BOX 1658
FOND DU LAC, WI 54935-7258

NOTE

Information in this document is subject to change without notice. The illustrations and specifications are not binding in detail. Giddings & Lewis Electronics shall not be liable for any technical or editorial omissions occurring in this document, nor for any consequential or incidental damages resulting from the use of this document.

DO NOT ATTEMPT to use any Giddings & Lewis product until the use of such product is completely understood. It is the responsibility of the user to make certain proper operation practices are understood. Giddings & Lewis products should be used only by qualified personnel and for the express purpose for which said products were designed.

Should information not covered in this document be required, contact the Customer Service Department, Giddings & Lewis Electronics Company, 666 South Military Road, P.O. Box 1658, Fond du Lac, WI 54935-7258. Giddings & Lewis Electronics can be reached by telephone at (414)-921–7100.

Manual Part No. 401-52341-02
Version 23-89

©1988 AMCA International Corp.

TABLE OF CONTENTS

SECTION	DESCRIPTION	PAGE
	SECTION 1 - INTRODUCTION	
1.1	GENERAL	1-1
1.2	SAFETY	1-1
1.3	LADDER DIAGRAM NETWORK	1-1
1.4	ADDRESSING	1-2
1.5	MODE SELECTION	1-2
1.5.1	MODE SELECT SWITCH	1-3
1.5.2	AUX 1 MODE SELECTION	1-3
1.5.3	AUX 1 MENU SELECTION	1-4
1.5.4	REDIRECTING COMMUNICATIONS FROM THE LOADER PORT TO THE TERMINAL PORT	1-5
1.5.5	CHANGING THE AUTHORIZATION CODE FUNCTIONS	1-5
1.5.6	LEAVING AND RETURNING TO THE AUX 1 MODE	1-6
	SECTION 2 - INSTRUCTION SET	
2.1	GENERAL	2-1
2.2	CONTACTS	2-2
2.3	RUNG	2-2
2.4	COIL	2-2
2.5	TIMERS	2-3
2.5.1	TIME DELAY TO ENERGIZE	2-4
2.5.2	TIME DELAY TO DE-ENERGIZE	2-4
2.6	BRANCH	2-4
2.6.1	BRANCH DOWNWARD	2-5
2.6.2	RUNG ORIGINATION	2-5
2.6.3	RUNG TERMINATION	2-5
2.6.4	RUNG CLOSURE	2-5
2.6.5	BRANCH TERMINATION	2-6
2.7	VARIABLES	2-6
2.7.1	NON-VOLATILE VARIABLES	2-6
2.8	STATEMENTS	2-7
2.8.1	IF-THEN (conditional) QUALIFIER	2-7
2.8.2	LET (arithmetic)	2-7
2.8.2.1	INTEGER ARITHMETIC	2-7
2.8.2.2	OVERFLOW RELAY	2-8
2.8.3	SET	2-8
2.8.4	GOTO	2-9
2.8.5	CALL	2-10
2.9	SUMMARY	2-11

SECTION	DESCRIPTION	PAGE

SECTION 3 - ENTERING AND EDITING

3.1	GENERAL	3-1
3.2	ENTERING THE PROGRAM MODE	3-1
3.3	INITIALIZATION	3-1
3.4	ESCAPE (ESC)	3-3
3.5	PRINT (P)	3-3
3.6	NAME (N)	3-4
3.7	INSERT (I)	3-5
3.8	DELETE (D)	3-6
3.9	MOVE (M)	3-6
3.10	RUB (DEL)	3-6
3.11	ALLOCATE (A)	3-7
3.12	TIMER CONTROL (CTRL T)	3-7
3.13	PRINTER CONTROL (CTRL P)	3-7

SECTION 4 - LOAD-RECORD-VERIFY

4.1	GENERAL	4-1
4.2	RECORD	4-1
4.3	VERIFY	4-1
4.4	LOAD	4-2
4.5	VARIABLE AND CONTROL RELAY BACKUP	4-2
4.5.1	SAVING DATA	4-2
4.5.2	LOADING DATA	4-3

SECTION 5 - APPLICATION EXAMPLES

5.1	GENERAL	5-1
5.2	ONE-SHOTS	5-1
5.3	COUNTER	5-1
5.4	FLIP-FLOP	5-2
5.5	LATCHED RELAY	5-2
5.6	SCAN STEPPER	5-2
5.7	SCAN TIME MEASUREMENT	5-3
5.8	TIMERS	5-4
5.9	ACCUMULATED TIME	5-4
5.10	NUMERIC KEYBOARD	5-4
5.11	STEPPING SWITCH	5-5
5.12	SCALING	5-7

SECTION 6 - REAL TIME DEBUG

6.1	GENERAL	6-1
6.2	DISPLAY OPTIONS	6-1
6.2.1	OPTION 1 - CRT MONITOR	6-1
6.2.2	OPTION 2 - VIDEO DISPLAY/KEYBOARD UNIT	6-1
6.2.3	OPTION 3 - IBM PC OR COMPATIBLE PERSONAL COMPUTER	6-1
6.3	INSTALLING REAL TIME DEBUG	6-1
6.4	PARAMETERS	6-1
6.4.1	PARAMETER FOR FIRST CALL	6-2
6.4.2	PARAMETER FOR SECOND CALL	6-2
6.5	OPERATION	6-3
6.6	SCREEN DISPLAY	6-3
6.6.1	SCREEN DIVISIONS	6-3
6.6.2	ENERGIZED/DE-ENERGIZED ITEMS	6-3
6.7	RTD KEY COMMANDS	6-4
6.7.1	PRINT (Display) COMMAND	6-4
6.7.2	NEXT LINE COMMAND	6-4
6.7.3	LAST LINE COMMAND	6-4
6.7.4	MISCELLANEOUS COMMAND	6-4
6.8	FORCING FUNCTION	6-6
6.8.1	SCREEN DISPLAY	6-6
6.8.2	CONTACT FORCING	6-6
6.8.3	DISABLING AND ENABLING A COIL OR OUTPUT	6-6
6.8.4	SEARCH COMMAND (For Disabled Coils)	6-7
6.8.5	FORCING COILS AND EXTERNAL OUTPUTS	6-7
6.8.6	CHANGING PROGRAMMED TIMER VALUES	6-8
6.8.7	TIME ENERGIZED (TE) COILS	6-8
6.8.8	TIME DE-ENERGIZED (TD) COILS	6-8
6.8.9	VARIABLE FORCING	6-8

SECTION 7 - MESSAGE FORMATTER

7.1	GENERAL	7-1
7.2	START-UP	7-1
7.3	COMMANDS	7-1
7.3.1	INSERT (I key) COMMAND	7-1
7.3.2	DELETE (D key) COMMAND	7-3
7.3.3	EDIT (E key) COMMAND	7-3
7.3.4	RENUMBER (R key) COMMAND	7-3
7.3.5	PRINT (P key) COMMAND	7-4
7.3.6	FORMAT (F key) COMMAND	7-4
7.3.7	HELP (H key) COMMAND	7-4
7.3.8	RUB/DEL COMMAND	7-4
7.3.9	ESCAPE (ESC key) COMMAND	7-6
7.3.10	PRINTER ON/OFF	7-6
7.3.11	HEXADECIMAL MESSAGES (CTRL X) COMMAND	7-6
7.4	HEXADECIMAL DATA ENTRY	7-6
7.5	ERROR MESSAGES	7-6
7.6	MEMORY CONSERVATION	7-6

SECTION 8 - EPROM PROGRAMMER

8.1	GENERAL	8-1
8.2	EPROM DEVICES	8-1
8.3	PROGRAMMING HARDWARE	8-1
8.4	OPERATION	8-1
8.5	ERROR HANDLING	8-3

SECTION 9 - CALL ROUTINE INSTALLER

9.1	GENERAL	9-1
9.2	LOADING CALL ROUTINES FROM TAPE	9-1
9.3	LOADING CALL ROUTINES FROM FLOPPY DISK	9-2
9.4	CALL ROUTINES STORED IN EPROM	9-3
9.5	COPYING CALL ROUTINES FROM EPROM	9-3
9.6	INSTALLING CALL ROUTINES	9-3
9.7	REINSTALL	9-4
9.8	UPDATING CALL ROUTINES IN USER MEMORY	9-4
9.9	PC400 TO PiC409 UPGRADE	9-4
9.10	ERROR MESSAGES	9-5

SECTION 10 - BANK SELECT

10.1	GENERAL	10-1
10.1.1	BACKGROUND INFORMATION	10-1
10.2	USING BANK SELECT	10-1

SECTION 11 - SELECTIVE BACKUP

11.1	GENERAL	11-1
11.2	BACKUP PROCEDURE	11-1
11.3	LOADING BACKED UP DATA	11-2

SECTION 12 - DIAGNOSTICS

12.1	GENERAL	12-1
12.1.1	SYSTEM REQUIREMENTS	12-1
12.1.2	ACCESSING THE DIAGNOSTICS MENU	12-1
12.2	USER MEMORY DIAGNOSTIC	12-1
12.3	CONTROL RELAY MEMORY DIAGNOSTIC	12-2
12.4	EXECUTING POWER ON DIAGNOSTICS	12-3
12.5	THE I/O MODULE ADDRESS DETECT TEST	12-3
12.5.1	GENERAL	12-3
12.5.1.1	BACKGROUND INFORMATION	12-4
12.5.1.2	I/O MODULE DEFINITION	12-4
12.5.1.3	REQUIRED HARDWARE	12-4

SECTION	DESCRIPTION	PAGE

12.5.2	ACCESSING THE I/O MODULE ADDRESS DETECT TEST	12-4
12.5.3	INITIALIZING THE I/O MODULE ADDRESS DETECT TEST	12-5
12.5.4	ADDING TABLE DATA	12-5
12.5.5	DISPLAYING THE I/O MODULE ADDRESS TABLE	12-6
12.5.6	DELETING TABLE DATA	12-6
12.5.7	PERFORMING THE I/O MODULE ADDRESS TEST	12-7
12.6	TROUBLESHOOTING HINTS	12-8
12.6.1	OVERLAPPING ADDRESS LOCATIONS	12-8
12.7	RECORDING AND/OR LOADING THE I/O MODULE ADDRESS TABLE	12-8

APPENDIX

APPENDIX A.....VARIABLE ALLOCATION CHART
APPENDIX B.....STATEMENT NUMBER ALLOCATION CHART
APPENDIX C .....CONTROL RELAY ALLOCATION CHART
APPENDIX D .....ERROR MESSAGES
APPENDIX E.....EXECUTION TIMES AND MEMORY USAGE
APPENDIX F .....HEXADECIMAL AND DECIMAL CONVERSION
APPENDIX G.....ASCII CODE
APPENDIX H.....SYSTEM CONTROL RELAYS
APPENDIX I.....INDEX OF ILLUSTRATIONS

SECTION 1 - INTRODUCTION

1.1 GENERAL

This manual is intended as a guide that provides both general and detailed information necessary for developing LADDER DIAGRAM NETWORKS (LDN's). The development process for LDN's is preceded by a complete assessment of the system requirements. The requirements that should be considered, prior to developing the LDN, are as follows:

1. Define the control scheme. This includes a procedural document which encompasses all machine or process action.

2. Define the devices that will act as inputs in the control scheme. Inputs are devices that must be monitored. Inputs to the Programmable industrial Computer typically include:

   a. Pushbutton, Limit and other switches
   b. Pressure, Temperature and other sensors
   c. Encoders, Resolvers and other motion control transducers.

3. Define the devices which will act as outputs in the control scheme. Outputs from the Programmable industrial Computer typically include:

   a. DC controlled devices; e.g. lamps, multiplexers, etc.
   b. AC controlled devices; e.g. relays, solenoids, etc.
   c. Devices using analog signals (of a non-power nature); e.g. drives, etc.
   d. Devices using digital signals (of a data nature); e.g. CRT, printer, etc.

4. Specify the hardware and software required to implement the control scheme.

1.2 SAFETY

This manual should be completely read and understood prior to programming the PiC. Observe all federal, state and local safety standards that are pertinent to this piece of equipment.

CAUTION, IMPORTANT and NOTE blocks will be found throughout this manual. The following is a depiction of how these items will appear and the associated definition of each:

CAUTION

Programming procedures, practices, etc., which may result in personnel injury or loss of life if not carefully followed.

IMPORTANT

Programming procedures, practices, etc., which may result in damage to the equipment or data if not employed.

NOTE

Programming procedures, practices, etc., which are essential to emphasize.

1.3 LADDER DIAGRAM NETWORK

The Ladder Diagram Network (LDN) is the control scheme, defined in a language that is both understandable to humans and executable by the Programmable industrial Computer (PiC). The LDN is composed of Ladder Diagram Circuits (LDC's) and function statements.

LDC's are circuits which control coils (SECTION 2.2 - 2.6) and resemble rungs of a ladder (hence the name "ladder" diagram).

Statements act as enhancements to ladder circuits and provide predefined actions such as arithmetic calculations (SECTION 2.8).

The LDN is scanned continuously in the PiC RUN mode. The PiC scans (examines & solves) each LDC and statement sequentially. The first LDC or statement is solved followed by the second, third, etc., until all of the LDN has been solved. Then the controller returns and solves the first LDC or statement again.

Once scanning is initiated, it continues until power is removed or a new mode is selected. Within an LDC or statement, all elements are solved from left to right and from top to bottom.

The result of each circuit or statement is immediately available to all subsequent circuits or statements in the LDN. The sequence of the scan is the order in which the LDN was entered and not the numerical value of the statements or coils.

The rate at which the entire LDN can be scanned is known as the scan time. The scan time is unique for each LDN. The scan time can be measured by several methods (SECTION 5.7) and is typically stated in milliseconds (thousandths of a second). The scan time is one parameter that can be used to determine the suitability of a PiC for a particular machine or process.

Two types of strobe signals are used, an input strobe signal and an output strobe signal. The input strobe signal causes input module hardware to latch the state of inputs. The output strobe signal causes data in the output module latches to be transferred to the output controlling devices.

To make I/O data available to the LDN, each latch, input or output, can be accessed by the Central Processing Unit (CPU). The use of strobe signals ensures that all data is transferred simultaneously. Simultaneous data transfer allows all calculations and logic within the LDN to be completed prior to inputting new data or outputting results.

FIGURE 1-1 illustrates a block diagram of the strobe process. The strobe signals are generated automatically as part of the overall scan process.

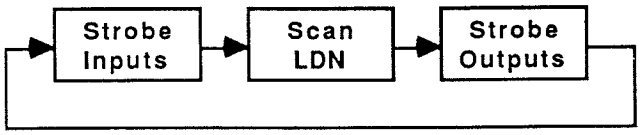

FIGURE 1-1 STROBE

1.4 ADDRESSING

Each module (printed circuit board) is assigned an address. The address is the location the module will occupy as seen by the Central Processing Unit (CPU). This is not to be confused with the physical location of the module within the nest or rack. Addresses are often referred to as memory locations; since, to the CPU, all addresses appear as memory. The addresses recognized by the CPU range from 0 to 65,535.

NOTE

Throughout this and all other G&L documentation, any number preceded by a "$" is considered a hexadecimal (base sixteen) number. See the glossary for a definition of hexadecimal numbers and APPENDIX F for a hexadecimal to decimal conversion chart.

A complete diagram of memory locations is called a memory map (SECTION 2 PiC409 Family User's Manual). The memory map shows where each type of module; i.e., memory, I/O, etc., belongs. The specific documentation for each module describes the address which that module may occupy.

NOTE

Certain Call Routines require specific module addresses. Refer to the documentation accompanying the Call Routine software.

For the programmer to correctly develop an LDN, the address of each module must be known. Addressing worksheets are included, in SECTION 2 of the PiC User's Manual, as an aid in addressing. An explanation of how to fill out the worksheet is also included.

The use of addressing worksheets is advised for creating an orderly, efficient system design. Filling out addressing worksheets prevents overlap caused by assigning more than one module to the same address. After the worksheet is completed, it can be used as a ready reference for system set-up, programming and maintenance.

1.5 MODE SELECTION

The PiC has several different operating modes. These modes are selected by using either the Mode Select Switch on the upper left corner of the PiC Control Panel or by using the AUX 1 Menu.

1.5.1 Mode Select Switch

If your PiC was purchased prior to September 1985, you may not have the AUX 1 option which allows selection of the different modes by remote control. In this case, the Mode Select Switch must be used.

To select an operating mode, rotate the Mode Select Switch to the desired position. Status light 1 will flash on and off. Press the initialize button on the right side of the PiC Control Panel. Status light 1 will turn off to indicate the mode was successfully selected.

1.5.2 AUX 1 Mode Selection

If your PiC was purchased on or after September 1, 1985 or if you purchased an AUX 1 update kit for your Compiler and CPU modules, you may use either the Mode Select Switch or the AUX 1 menu to select the different modes.

To use the AUX 1 menu, connect a programming terminal to the terminal port on the PiC Control Panel. Be sure that the terminal baud rate selector switch setting matches the baud rate of the terminal. Turn on the PiC and the terminal. Rotate the Mode Select Switch on the PiC Control Panel to the AUX 1 position and press the initialize button.

If the following message appears on the screen, the PiC has not been initialized. Follow steps 1, 2 and 3 to initialize the system.

```
"PLEASE ENTER THE SYSTEM'S
DEFAULT AUTHORIZATION CODE."
```

(perform steps 1, 2 and 3).

NOTE

If the following message appears instead of the one above, the system has already been initialized. Enter the User Authorization Code and proceed directly to Section 1.5.3.

```
"PLEASE ENTER YOUR USER
AUTHORIZATION CODE"
```

(enter the code and press the Return key. Go to section 1.5.3)

Step 1 - Type the characters "PC409" and press the Return key.

Step 2 - The following message will appear :

```
"TO DEFINE YOUR USER AUTHORIZATION
CODE, ENTER 1-9 CHARACTERS FOLLOWED
BY A CARRIAGE RETURN.

REMEMBER, THE CODE IS NOT SHOWN ON
THE SCREEN, EACH TIME A CHARACTER
IS ACCEPTED, A "*" IS DISPLAYED."
```

Step 3 - Type a code consisting of one to nine characters and press the Return key. These characters may include any combination of the letters of the alphabet and the numerals 0 through 9.

Instead of displaying the characters you type on the screen, a series of asterisks will be displayed instead. This is to prevent an onlooker from viewing your authorization code when you type it in.

Your User Authorization Code is the password required to access the system through the AUX 1 Mode. From now on, this code will be required when using the AUX 1 Mode.

IMPORTANT

After creating a User Authorization Code, write it down and store the code in a safe place. If you forget the code and do not have it written down anywhere, you must clear the memory on the PiC Support Module and repeat the procedure for setting up a new code.

To clear the memory from the PiC Support Module, turn off the power to the PiC and remove the PiC Support Module. Remove the IBE (internal battery enable) jumper from the module for several minutes. This clears the memory chips containing the password information. Replace the jumper, reinsert the PiC Support Module and restart the system.

CAUTION: CLEARING THE MEMORY FROM THE PIC SUPPORT MODULE WILL RESULT IN PERMANENT LOSS OF ANY BATTERY BACKED DATA STORED ON THIS MODULE. TO SAVE NON-VOLATILE AND RETENTIVE RELAY DATA BEFORE REMOVING THE *IBE* JUMPER, READ SECTION 4.

```
PIC 409 AUX 1 MODE SELECT MENU VER. 1._

1 - RUN
2 - PROGRAM
3 - LOAD
4 - VERIFY
5 - RECORD
6 - AUX TWO
7 - AUX THREE

ADDITIONAL FUNCTIONS

8 - RE-DIRECT DATA I/O PORT
9 - CHANGE AUTHORIZATION

TO MAKE YOUR SELECTION, ENTER THE NUMBER
AND CARRIAGE RETURN.  TO RETURN TO THE AUX 1 MENU FROM ANY
MODE, ENTER "CONTROL Q".

DATA I/O IS CURRENTLY VIA TERMINAL PORT

SELECT (1-9)
```

FIGURE 1-2 AUX 1 MENU

1.5.3 AUX 1 Menu Selection

After entering the authorization code, the AUX 1 Menu will appear on the screen as shown in FIGURE 1-2.

The first seven functions are the same as the standard selections available from the Mode Select Switch on the PiC Control Panel. To use any of these functions, press the number from the menu to the left of the desired function followed by the Return key.

Table 1-1 lists the sections in this manual where the different PiC Mode functions are described in detail.

NOTE

When entering the RUN Mode, the PiC will ask you to make your selection a second time. This is to prevent you from accidentally turning on a machine.

To leave any of the selected modes and to return to the AUX 1 menu, hold down the "CTRL" key and press the "Q" key. The PiC will ask for your User Authorization Code. Enter the code and press the Return key.

If you enter the incorrect code, the PiC will not allow you to reenter the AUX 1 Mode. Press any key to reset the code entry operation and enter your code again. When the correct code is entered the AUX 1 menu will return to the screen.

IMPORTANT

You cannot reenter the AUX 1 Mode from the Run Mode by using the "CTRL" and "Q" keys unless Real Time Debug, (Call Routine C912) is installed and working in your LDN. Instead you must turn the Mode Select Switch on the PiC Control Panel out of the AUX 1 Mode and then back to the AUX 1 Mode and press the initialize button.

To avoid this inconvenience, always include Real Time Debug with every LDN you use.

Mode	Function	Section To Read
RUN	Real Time Debug	Section 6
PROGRAM	Entering and Editing an LDN	Section 3
LOAD	Transfer Data To PiC from Tape Or Disk	Section 4
VERIFY	Verify Data in PiC	Section 4
RECORD	Save Data from PiC to Tape or Disk	Section 4
AUX 2	Message Formatter	Section 7
	Save Data in PiC on EPROM	Section 8
	Call Routine Installer	Section 9
AUX 3	Monitor and Modify Hexadecimal Data (requires factory consultation)	———

TABLE 1-1 AUX 1 MODE FUNCTIONS

1.5.4 Redirecting Communications From the Loader Port To the Terminal Port

The eighth selection on the AUX Menu allows you to redirect all data intended for the Loader Port to the Terminal Port. This permits the use of a personal computer to function as both a programming terminal and a device for storing and retrieving data on floppy disks.

This function is intended for use with an IBM PC or compatible personal computer and the G&L GLLADD version 2.0 or higher software. The instructions for using this option are covered in the documentation supplied with GLLADD.

If you are not using the GLLADD software, DO NOT select this option.

1.5.5 Changing the Authorization Code Functions

If you want to change your User Authorization Code or the way it works in the PiC, select function 9 from the AUX 1 Menu and press the Return key.

The PiC will ask you to enter your Authorization Code. After entering the correct code, press the Return key. The following menu will appear on the screen.

```
1.  CHANGE THE AUTHORIZATION CODE
2.  CODE NOT REQUIRED FOR ENTRY TO
    THE TERMINAL MODE
3.  CODE REQUIRED FOR ENTRY TO THE
    TERMINAL MODE.

TO MAKE YOUR SELECTION, ENTER THE
NUMBER AND CARRIAGE RETURN.

CHOICE?
```

Selection 1 - If you wish to change your existing code, press "1" followed by a Return. After doing so, the instructions for entering a new authorization code will appear. Enter in a new code using one to nine alphanumeric characters just as you did for the original authorization code. Press the Return key. The AUX 1 menu will return to the screen.

Selection 2 - If you find it inconvenient to enter the authorization code every time you reenter the AUX 1 Mode from a different mode, press "2" followed by a Return key. After doing so, you will no longer need to enter your authorization code as long as the Mode Selection Switch on the PiC Control Panel is set to AUX 1 and the power is left on.

The only exceptions are if you wish to change the authorization code (selection 1) or if you decide to require the use of the authorization code again (selection 3).

NOTE

Every time the setting of the Mode Select Switch on the PiC Control Panel is changed or if power is turned off and then back on again, the system will once again require the User Authorization Code every time you return to the AUX 1 Mode.

Selection 3 - Selecting "3" restores the requirement for the User Authorization Code every time you reenter the AUX 1 Mode.

1.5.6 Leaving And Returning To The AUX 1 Mode

Although its use is highly recommended for the sake of security and convenience, the AUX 1 Mode does not have to be used all of the time. By setting the Mode Select Switch on the PiC Control Panel to a mode other than AUX 1, the remote control of the PiC is terminated and the manual selection of the operating modes takes place.

To return to the AUX 1 Mode, rotate the Mode Select Switch on the PiC Control Panel to the AUX 1 position and press the initialize button on the control panel. The PiC will ask for your User Authorization Code. Enter the code and press the return key. The AUX 1 Menu will appear on the screen.

CAUTION

Because the AUX 1 Mode can be exited at any time by rotating the Mode Select switch on the PiC Control Panel, this switch should be made inaccessible to all unauthorized personnel. This can be accomplished by putting a locked door or panel in front of the control panel or by keeping the entire PiC in a restricted area.

SECTION 2 - INSTRUCTION SET

2.1 GENERAL

The symbols and statements used to create LDN's are called the instruction set. Familiarity with the instruction set will allow the programmer to develop LDN's which utilize all the capability inherent in the PiC. A summary of the instruction set is shown in the TABLE 2-1. Refer to FIGURE 2-1 for an example of the instruction set and LDN format. APPENDIX E provides an execution time and memory usage summary for the instruction set. Sections 2.2 through 2.8 describe each element of the instruction set.

Symbol	Terminal Key	Function
⊣ ⊢	F	Normally Open Contact
⊣/⊢	G	Normally Closed Contact
┬	R	Branch
( )	T	Coil
(TE)	Y	Time Delay To Energize Coil
(TD)	H	Time Delay To De-Energize Coil
	S	CALL Statement
	C	SET Statement
	X	GOTO Statement
	D	LET Statement

TABLE 2-1 INSTRUCTION SET

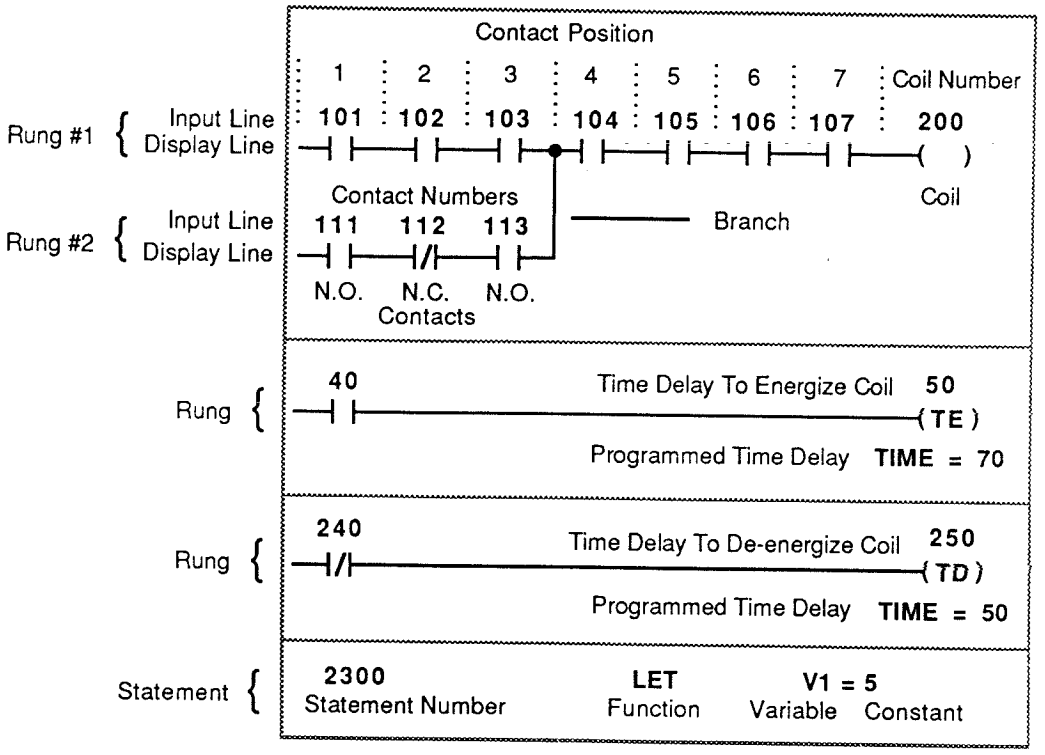

FIGURE 2-1 LDN FORMAT AND SYMBOLS

2.2 CONTACTS

Contacts represent either coil outputs or inputs; such as toggle or limit switches, etc. Contacts are available as either normally open (N.O) or closed (N.C). N.O contacts do not provide circuit continuity until closed; N.C. contacts provide circuit continuity until opened. The state (open or closed) of the contact(s) in series with a coil determines whether the coil is energized or de-energized. If a series path of closed contacts exists in an LDC (a continuous circuit), the coil in that circuit will be energized.

Refer to FIGURE 2-2 for an illustration of the continuity concept. Assume contacts 2, 3 and 4 are closed; therefore, coil 100 is energized. If one contact opens, the circuit is no longer continuous. If continuity is lacking, the coil will de-energize.

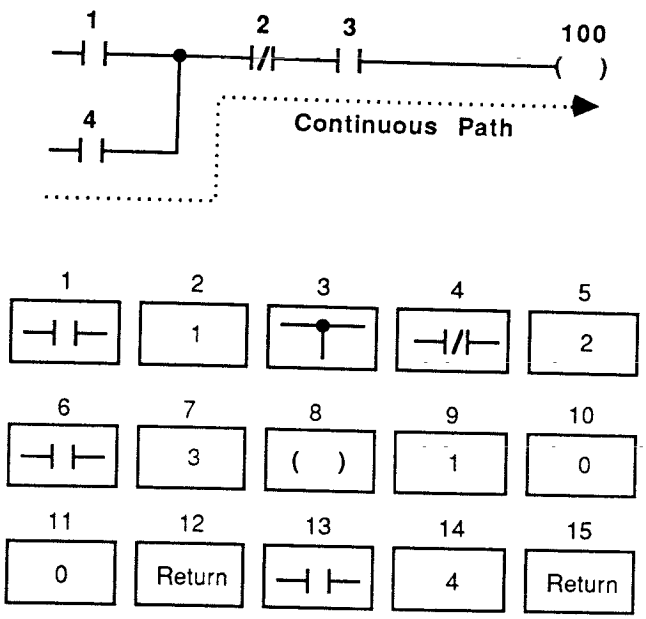

FIGURE 2-2 CONTINUITY

Contacts are assigned the same label as the associated input or output. For example; a coil labeled 100 will control all contacts labeled 100. Also, a limit switch labeled 2000 will control all contacts labeled 2000.

When entering either N.O. or N.C. contacts, the key representing the contact symbol is depressed prior to the key(s) used to enter the numeric label assigned to the contact. The keystroke sequence for entering contacts is also illustrated in FIGURE 2-2.

2.3 RUNG

A rung consists of a series of contacts which terminate in either a coil or a branch. Coils are always used to terminate the first or top most rung of an LDC. Branches are always used to terminate rungs below the top most rung. A single rung may contain a maximum of seven contacts. Parallel rungs are connected by a branch, as shown in FIGURE 2-1. An LDC may contain a maximum of eight parallel rungs.

2.4 COIL

A coil is the logical solution (output) of an LDC or a SET statement (SECTION 2.8.3). Coils are used to represent hardware outputs (e.g. lamps, solenoids, motor starters, etc.) internal relays (typically used to summarize a number of related contacts, construct one-shots, etc.) or as timers (SECTION 2.5). A coil within an LDC is either energized (on) or de-energized (off). The state of the coil is dependent upon the contacts within the LDC. A coil will be energized if a continuous path of closed contacts exists from the extreme left side of the LDC to the coil within the LDC. If a continuous path does not exist (or an existing path is broken) the coil within the LDC will be de-energized.

When entering an LDC, the duplicate use of a coil number will result in the prompt "DUP Y-N?" immediately after the coil number entry and Return keystroke.

Typically, the response should be "N" (No). Duplication of coils is not advised unless absolutely required. If a coil is duplicated, the coil can be effected by any of the LDC's in which the coil is used. Also, when editing, only the first duplicate coil encountered will be affected by the editing commands.

The "DUP Y-N?" prompt is primarily used as a notification that the specific coil number has already been used.

Coils are labeled with unique integers. The number selected as the coil label is dependent upon the coil type; i.e., output coil, internal relay or timer. Refer to APPENDIX C for label selection and assignment. The contacts controlled by a coil have the same label as the coil. Coils may have an almost unlimited number of corresponding N.O. and N.C. contacts.

When entering a coil, the key that represents the coil symbol must be pressed prior to the key(s) used to enter the numeric label assigned to the coil. The keystroke sequence for entering coils is illustrated in FIGURE 2-2.

NOTE

Call Routines or other software may use Control Relays that are numbered from 1501 to 1999. These Control Relays are typically considered reserved for present and future use.

A list of Control Relays dedicated to the system is given in APPENDIX H. The Control Relays that are used by Call Routines are listed in the documentation accompanying the Call Routine software.

G&L recommends that internal relays from 0 to 1500 be used (0 to 511 as timers or relays) by customers. The remaining relays should be used only for the predefined application.

A feature known as retentive relays is available. If battery backed memory modules are used, the state of a retentive relay will be maintained even when power to the PiC is turned off. Non-retentive relays are cleared to the de-energized state when power to the PiC is turned off.

2.5 TIMERS

Timers are available as time energized (TE) or time de-energized (TD). Sections 2.5.1 and 2.5.2 describe the unique attributes of the TE and TD coils.

Timer coils have an available delay time in either of the following:

1. One-tenth second (100 millisecond) increments from a minimum of 0.0 seconds to a maximum of 6552.9 seconds.
2. One-hundredth second (10 millisecond) increments from a minimum of 0.0 seconds to a maximum of 655.29 seconds.

The default time increment is one-tenth second. To change the time increment, hold the "CTRL" key and press the "T" key on the terminal keyboard (see SECTION 3.12). The time increment will then be changed from the present increment to the alternate increment.

NOTE

The time increment selected applies to all timers within the LDN. CR 1992 is energized when 100 millisecond increments are active and de-energized when 10 millisecond increments are active.

Delay time is determined in one of the following two methods:

1. Fixed delay time - A fixed delay time requires entering an integer value from 0 to 65,529 in the time entry area for the timer coil.
2. Variable delay time - A variable delay time requires entering a variable in the time entry area for the timer coil. The variable value must be in the range from 0 to 65,529. The variable must be defined prior to the associated timer coil in the LDN (see section 2.7 VARIABLES).

Regardless of which method is employed, the number used represents tenths or hundredths of a second. The ladder software places the decimal point internally. For example: Entering 105 will result in a delay of 10.5 seconds in the default mode (the decimal point is not displayed).

When using variables to designate delay times, ensure that the variable remains in the range from 0 to 65,529. If the variable strays outside the range from 0 to 65,529, the time delay will not function properly. If a delay greater than 6,552.9 seconds is desired, then cascading multiple timers is advised. If the variable changes during the timing cycle to a value less than or equal to the elapsed time, the coil will undergo a transition to the opposite state on the next scan.

CAUTION

Failure to remain in the proper variable time range (from 0 to 65,529) could cause unexpected operation, which may result in a hazardous operating condition.

Timer coils are assigned labels. The label range is from 0 to 511. Contacts corresponding to timer

coils are assigned the same label as the timer coil. A timer coil may have a nearly unlimited number of corresponding N.O. and N.C. contacts.

When entering an LDC that contains a timer, the key representing the timer must be pressed prior to the key(s) used to enter the numeric label that is assigned to the coil. After the RETURN key is pressed, a prompt for the time value is automatically generated.

FIGURE 2-3 illustrates an LDC that contains a timer and the keystroke sequence that is necessary to generate the LDC.

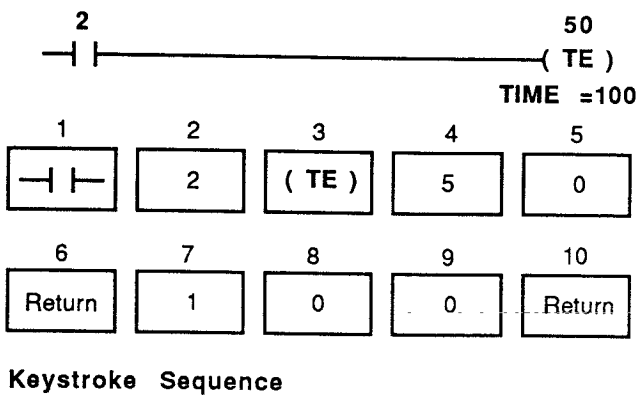

FIGURE 2-3 TIMER

2.5.1 Time Delay To Energize

The time delay to energize (TE) coil exhibits a time delay in the transition from the de-energized to the energized state. Before a TE coil becomes energized, the following two conditions must be met:

1. A contact or string of contacts that form a series path with the TE coil must be closed and remain closed.
2. The programmed time delay must have elapsed. If either of these conditions is not met, the TE coil will not become energized. Once energized, the TE coil will remain energized until a contact opens in the series path that controls the TE coil. No time delay occurs during the transition from the energized to the de-energized state of the TE coil.

2.5.2 Time Delay To De-Energize

The time delay to de-energize (TD) coil exhibits a time delay in the transition from the energized to the de-energized state. Before a TD coil can de-energize, the following two conditions must be met:

1. At least one contact in the series path that controls the TD coil must open and remain open, thereby breaking the circuit.
2. The programmed time delay must have elapsed. If either of these conditions is not met, the TD coil will not make the transition from the energized state to the de-energized state. Once de-energized, the TD coil will remain de-energized until a series path of closed contacts is formed in the circuit that contains the TD coil. No time delay occurs during the transition from the de-energized to the energized state of the TD coil.

2.6 BRANCH

A branch is used to connect parallel rungs in an LDC. Parallel rungs provide the logical "OR" function. Continuity in either one or both rungs, which are parallel, can satisfy circuit continuity up to the point of the connecting branch. FIGURE 2-4 illustrates the simplest form of a parallel rungs and the keystrokes necessary to generate the LDC. If either contact 1 or contact 2 or both contact 1 and 2 are closed, there will be circuit continuity (coil 100 will be energized).

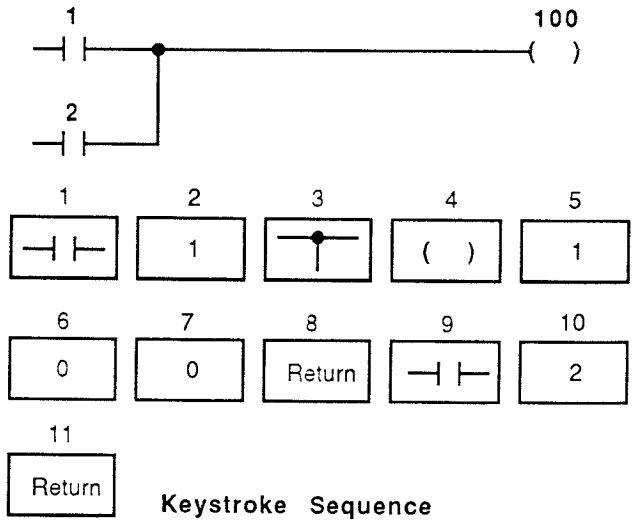

FIGURE 2-4 BRANCH

The format used for branching follows a number of specific rules. The ladder diagram software will not allow entry of an LDC that does not follow these rules. Branching rules are described in SECTIONS 2.6.1 through 2.6.5.

2.6.1 BRANCH DOWNWARD

Branches must be downward. The keystroke that represents the branch must be entered in the upper rung of a parallel pair of rungs. FIGURE 2-5 illustrates the downward branching concept. Rung 1 (the uppermost rung) contains contact 1, a branch and coil 100. Rung 2 (the lower rung) contains contact 2. The branch terminates at rung 2. The branch is closed by the return keystroke that follows the contact entry.

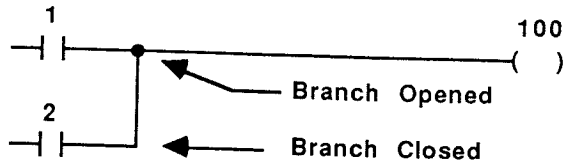

FIGURE 2-5 BRANCH DOWNWARD

2.6.2 RUNG ORIGINATION

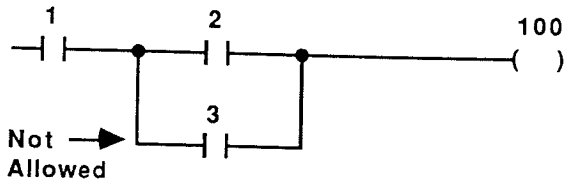

FIGURE 2-6 ILLEGAL BRANCH

All rungs must start on the extreme left side of the LDC. All rungs must start with a contact in contact position #1. A rung may not start with a branch from a previous rung. FIGURE 2-6 shows an unacceptable LDC. FIGURE 2-7 illustrates an acceptable equivalent of the circuit in FIGURE 2-6.

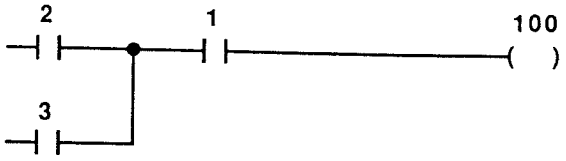

FIGURE 2-7 PROPER RUNG INITIATION

2.6.3 RUNG TERMINATION

A rung may be terminated only once. A branch may connect parallel rungs in only one position. Several branches may start in a rung but each branch must terminate at a different rung. FIGURE 2-8 illustrates a circuit which is contrary to this rule. FIGURE 2-9 illustrates acceptable equivalents.

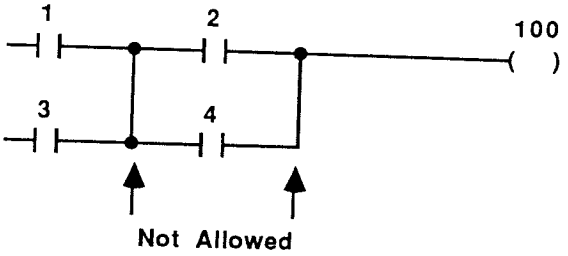

FIGURE 2-8 IMPROPER RUNG TERMINATION

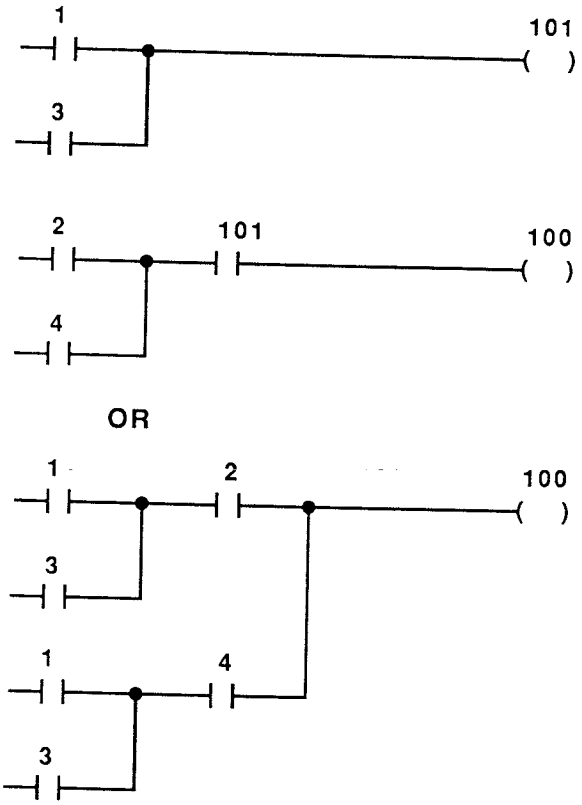

FIGURE 2-9 PROPER RUNG TERMINATION

2.6.4 RUNG CLOSURE

Contacts may not be entered after terminating a rung. A rung is terminated when a branch that is routed down to it from a higher rung is terminated. A new branch may be made from a terminated rung to a succeeding rung. FIGURE 2-10 illustrates a circuit that fails to follow the termination rules. FIGURE 2-11 illustrates an acceptable equivalent circuit.

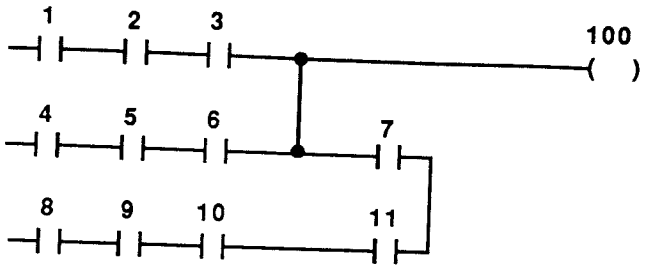

FIGURE 2-10 IMPROPER CONTACT TERMINATION

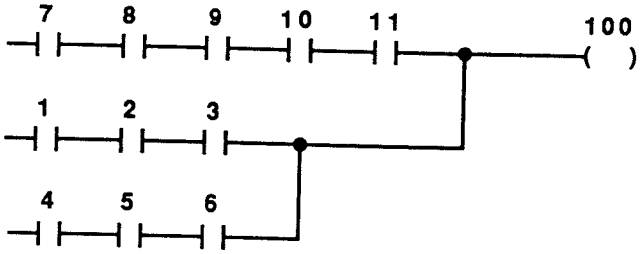

FIGURE 2-11 PROPER CONTACT TERMINATION

2.6.5 BRANCH TERMINATION

Branches are closed in order from left to right. A branch may not crossover one rung to get to another rung. FIGURE 2-12 illustrates an LDC that does not follow the rule. FIGURE 2-13 shows an equivalent LDC that is acceptable.

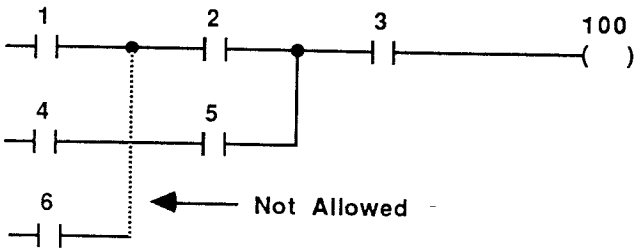

FIGURE 2-12 IMPROPER BRANCH

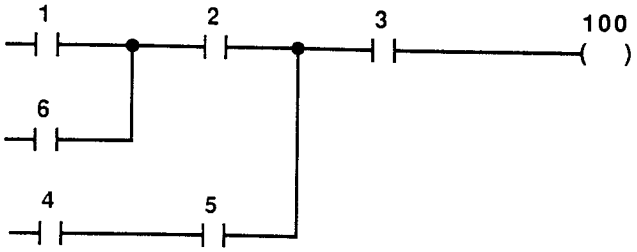

FIGURE 2-13 PROPER BRANCH

2.7 VARIABLES

Variables are labels that are assigned to integer numeric values that may change (vary) as the LDN is being executed. Variable labels consist of a single letter (V) followed by a number (from 0 to 899). This scheme results in 900 unique variable labels. The first (lowest) label is VO followed by V1, etc. The last (highest) label is V899.

NOTE

Each variable occupies three bytes of memory. This scheme allows variables to equal an integer value within the range +8,388,607 to -8,388,608. The numeric value of a variable is determined within a statement (SECTION 2.8). A variable may be assigned a value by the following methods:

1. A variable may equal a constant; e.g. V1=5
2. A variable may equal another variable; e.g. V1=V5
3. A variable may equal the solution of an arithmetic statement; e.g. V1=V2+10
4. A variable may be used by a Call Routine (SECTION 2.8.5) to store data. The documentation accompanying the Call Routine software will explain the use of variables within that routine.

2.7.1 Non-Volatile Variables

Non-volatile variables are the same as regular variables, with the exception that their contents will be retained when power is removed. Non-volatile variables require a battery-backed or other non-volatile read/write memory.

The allocation of non-volatile variables is accomplished during the start-up procedure (See the Initialization Procedure in SECTION 3.3). Any quantity of the 900 available variables (from VO to V899) may be defined as non-volatile.

The prompt "HOW MANY NON-VOLATILE VARIABLES?" will appear during initialization. Entering a 1 will result in VO being non-volatile; a 2 will result in V0 and V1 being non-volatile. Entering 899 will result in all 900 variables being defined as non-volatile.

When one or more variables are not designated as being non-volatile (i.e., if a number less than 899 was entered during initialization), removing power to the PiC will result in all non-volatile variables being cleared to zero.

NOTE

Non-volatile variables are predominantly used for constants such as machine references, etc. The values are entered and seldom modified. When a variable is modified, such as in a LET statement, the result of the LET statement is transferred to the variable storage area.

Transfers are accomplished one byte at a time. Since a variable occupies three bytes of memory, a number of steps transpire during a transfer. In the event that the power is removed, the transfer may not be completed. Therefore, to avoid this situation, exit the RUN mode prior to removing power.

2.8 STATEMENTS

A statement is used to perform arithmetic and control functions. The statements that are available are: LET, SET, GOTO and CALL. Sections 2.8.1 through 2.8.5 provide a detailed description of these statements.

Each statement must begin with a unique, four-digit, statement number. The statement number must be in one of two ranges: 2300 to 2999 or 3300 to 3999. These ranges allow a total of 1400 unique statements. APPENDIX B provides a statement allocation worksheet. Using this programming aid will help you avoid duplication of statement numbers; a condition which the PiC automatically rejects.

NOTE

Statement numbers are used as reference labels. The PiC and programmer both utilize these reference labels for editing, programming, etc. The statement number does not infer a numerical sequence.

For example; an LDN may have statement 2500 before statement 2300. The order in which statements are entered, *not the statement number*, determines the sequence of execution.

2.8.1 IF-THEN (conditional) Qualifier

The ability to create conditional statements is provided by the *IF-THEN* qualifier. The format of conditional statement is depicted in FIGURE 2-14.

The PiC automatically generates the word *IF* when a contact immediately follows a statement number. The word *THEN* is generated automatically when the CALL, GOTO, LET, or SET key is depressed after the contact number.

The logic of a conditional qualifier is *IF* condition A is true (contact closed) *THEN* perform action B. The *IF-THEN* is used when a CALL, GOTO, LET or SET statement is to be executed only when the conditional contact is closed. When the conditional (*IF*) contact is open, the statement will not be executed. If a statement is to be executed each ladder scan, do not use the *IF-THEN* qualifier.

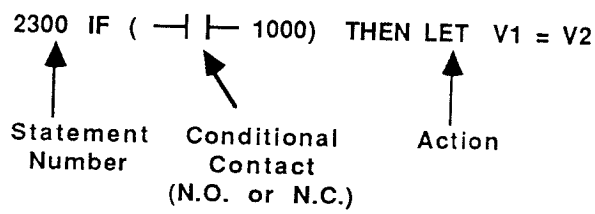

FIGURE 2-14 IF-THEN FORMAT

2.8.2 LET (arithmetic)

The LET statement is used to perform addition "+", subtraction "-", multiplication "*" or division "/". Only one operation may be performed per statement. FIGURE 2-15 illustrates typical uses of the LET statement and the keystroke sequence used to enter a typical LET statement.

NOTE

A statement such as 2500 LET V2=V3 actually causes the addition LET V2=V3+0 to be performed.

2.8.2.1 Integer Arithmetic - The PiC performs only integer arithmetic. Integer arithmetic involves whole numbers; i.e., 0, 1, 2, 3, ... to 8,388,607 and -1, -2, -3, ... to -8,388,608. This range is determined by the method used by the PiC to calculate and store numbers. The PiC uses a

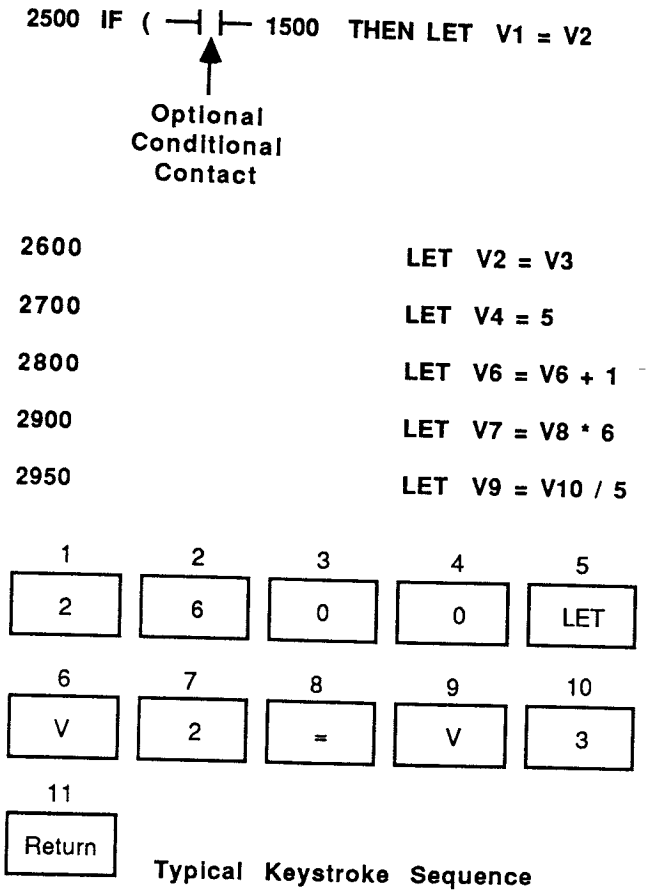

FIGURE 2-15 LET STATEMENT FORMAT

scheme know as triple precision, two's complement arithmetic. Triple precision means three bytes (24 bits) of information represent numbers in the PiC. The extreme left (24th) bit represents the sign (+ or –) and the remaining 23 bits represent the magnitude (size) of the number. The three bytes are stored in three consecutive memory locations. The manner in which the arithmetic is performed is invisible to the user. Integer arithmetic does not allow fractions, decimals, remainders or exponents. Scaling (SECTION 5.12) is used to overcome some of these limitations.

2.8.2.2 OVERFLOW RELAY - Coil 1999 (CR 1999) is reserved to indicate an overflow condition. Overflow can result from any of the following:

1. Addition: result greater than 8,388,607.
2. Subtraction: result less than -8,388,608.
3. Divide by zero: undefined operation.
4. Multiplication: result greater than 8,388,607 or less than -8,388,608.

When any of the above conditions are encountered, control relay 1999 is energized. The programmer is responsible for determining what action, if any, is necessary. Coil 1999 will remain energized for the remainder of the scan. The overflow relay (CR 1999) will be reset at the beginning of each scan.

2.8.3 SET

The SET statement is used to make relational (magnitude) comparisons of variables and constants. The operators available are as follows:

= .....EQUAL
< .....LESS THAN
> .....GREATER THAN
<= .....LESS THAN OR EQUAL
>= .....GREATER THAN OR EQUAL
<> .....NOT EQUAL
>< .....NOT EQUAL

The SET statement has the format shown in FIGURE 2-16. FIGURE 2-16 also includes the keystroke sequence required to enter the SET statement.

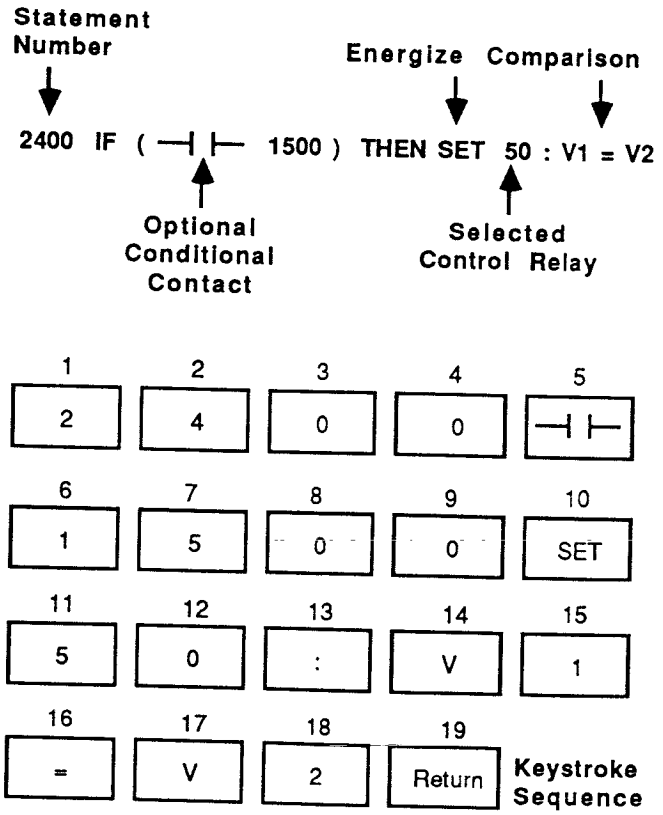

FIGURE 2-16 SET STATEMENT FORMAT

When the result of the comparison is true, the selected control relay will be energized. The contacts associated with the selected control relay are used either to control other coils or the conditional contacts of *IF-THEN* qualified statements. FIGURE 2-17 illustrates the use of the SET statement.

NOTE

When the conditional contact in a SET statement is not closed, the control relay state will remain unchanged, regardless of the comparison result.

Ladder Diagram:

2400 SET 10 : V1 < V2

10 200

Result:

If V1 is less than V2, then Coil 200 will be energized.

If V1 is greater than or equal to V2, then Coil 200 will not be energized.

FIGURE 2-17 SET STATEMENT USES

2.8.4 GOTO

The GOTO statement is used to control the sequence in which the LDN is executed. The GOTO statement is entered as shown in FIGURE 2-18. The GOTO may be written in a manner that will cause a specified statement or LDC to be executed next. See FIGURE 2-19 and FIGURE 2-20 for examples of GOTO statements.

As shown in FIGURE 2-19, if contact 1500 is closed, then the scan will skip statements 2600 and 2700. Statement 2800 will be executed immediately after statement 2500.

As shown in FIGURE 2-20, if contact 1500 is closed, then the scan will skip statements 2600, 2700 and 2800. The LDC that contains coil 50 will be executed immediately after statement 2500.

2300 IF (—| |— 1500) THEN GOTO 2500

Statement Number — Optional Conditional Contact — Destination

1	2	3	4	5
2	3	0	0	—| |—
6	**7**	**8**	**9**	**10**
1	5	0	0	GOTO
11	**12**	**13**	**14**	**15**
2	5	0	0	Return

Keystroke Sequence

FIGURE 2-18 GOTO STATEMENT FORMAT

Destination Statement

2500 IF (—| |— 1500) THEN GOTO 2800

2600 If CR 1500 is closed, these statements will be skipped. LET V1 = V2

2700 LET V3 = V5

2800 ← Destination LET V6 = V3 / V2

FIGURE 2-19 GOTO STATEMENT NUMBER

Destination LDC

2500 IF (—| |— 1500) THEN GOTO 50

2600 LET V1 = V2

If CR 1500 is closed, these statements will be skipped.

2700 LET V3 = V5

2800 LET V6 = 10

1600 50

Destination

FIGURE 2-20 GOTO LDC

Care should be exercised when using the GOTO statement. G&L strongly recommends that you do not use a GOTO to scan a previous statement or LDC. If a GOTO statement goes back in the ladder and is executed every time it is encountered, the remainder of the LDN will never be executed. Refer to FIGURE 2-21 for an example of an improperly used GOTO statement.

FIGURE 2-21 INCORRECT GOTO USAGE

As shown in FIGURE 2-21, when statement 2700 is executed, the scan returns to statement 2600. This looping will continue to be repeated, thereby preventing the remainder of the LDN from being executed. The Scan Loss light will illuminate to indicate that the PiC is not completing the scan sequence.

NOTE

If a Scan Loss occurs as a result of an improperly employed GOTO statement, the user must perform the following steps:

1. Leave the RUN Mode and enter the PROGRAM Mode.
2. Alter the LDN (via the PROGRAM Mode) to alleviate the problem.

If an LDN is run that contains a GOTO statement with a non-existent destination, Control Relay 1991 will be set. If the user has Call Routine D120, the statement number of the statement which is incorrect can be transferred to a variable and displayed.

2.8.5 CALL

CALL statements are used to access Call Routines. Call Routines are subroutines which perform a specific function. Call Routines are available for purchase.

NOTE

Call routines will be supplied on magnetic tape (cassette or data cartridge), floppy disk or ERPOM. Documentation is included with each Call Routine package.

Use of the CALL statement is illustrated in FIGURE 2-22. Parameters associated with a Call Routine may be decimal or hexadecimal numbers, variables, coil numbers, I/O, etc. The contents of the parameters are defined in the Call Routine documentation.

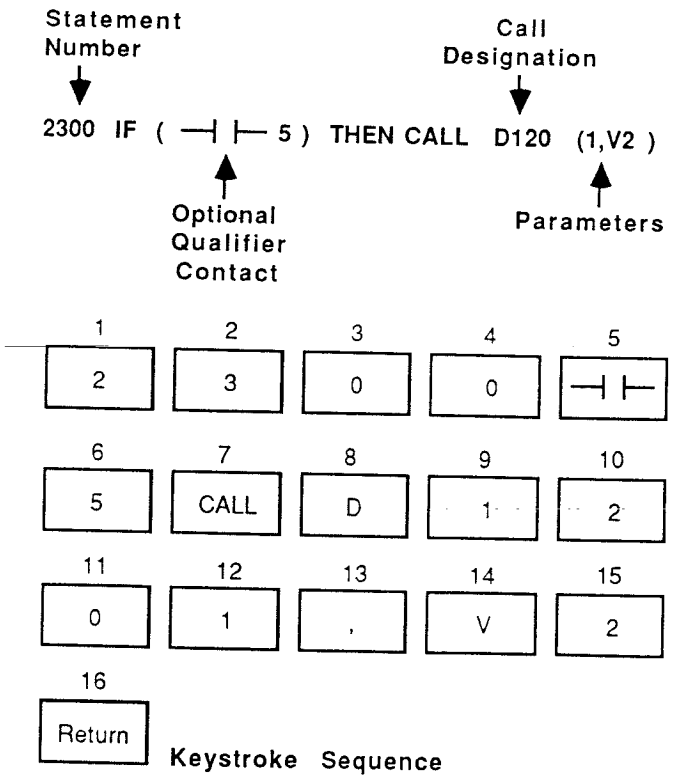

FIGURE 2-22 CALL STATEMENT FORMAT

2.9 SUMMARY

The following list of programming-related information is included for the convenience of the PiC409 programmer. Refer to the related text in the section to obtain more information on any subject.

1. The PiC409 is programmed in a ladder logic format that makes use of symbols and statements.

2. The entire control program is called a Ladder Diagram Network, or LDN. The individual circuits in the LDN are called Ladder Diagram Circuits, or LDCs.

3. The entire LDN is continuously scanned from top to bottom. Each rung or statement is solved from left to right.

4. In its most basic form, an LDN consists of contacts and coils. Identically labeled contacts and coils are interrelated.

5. Contacts can be entered as either normally open (N.O.) or normally closed (N.C.).

6. A coil is the logical conclusion of an LDC. The state of the coil depends on the state of the contacts and statements that control it.

7. Coils can be defined as retentive, meaning that they will retain the state they are in when power is removed and will be in that state when power is reapplied.

8. Timer coils can be defined as either time delay to energize (TE) or time delay to de-energize (TD). The timer increment can be user-defined as either .1 seconds or .01 seconds.

9. An LDC rung is a series of contacts that terminates in either a coil or a branch. The topmost rung of an LDC always terminates in a coil. Rungs below the topmost rung always terminate in a branch.

10. All rungs must start on the extreme left side of the LDC. A rung cannot start with a branch from a previous rung.

11. Branches are used to connect parallel rungs in an LDC. Branches perform the logical OR function.

12. Variables are labels that are assigned to integer numeric values that may change as the LDN is being executed.

13. Non-volatile variables retain their contents when power is removed and will power-up containing the same values. Volatile variables all revert to a value of zero when power is removed.

14. Statements are used to perform arithmetic and control functions. Each statement must begin with a unique, four-digit statement number.

15 IF-THEN conditional qualifiers allow the use of conditional statements. The corresponding statement will be executed <u>if</u> the user-defined precondition is met.

16. The sequence in which statements are solved in the LDN is determined by the order in which a statement is entered. The statement number assigned to a statement is for identification purposes only and has nothing to do with determining order.

17. LET statements perform a math function. One operation may be performed per statement.

18. SET statements allow magnitude comparisons of variables and constants.

19. GOTO statements control the sequence of LDN execution by sending execution to a user-defined location.

20. CALL statements are used to access the G&L Call Routines.

21. The PiC409 uses integer math. Integer arithmetic does not allow fractions, decimals, remainders or exponents. Scaling is used to overcome some of these limitations.

LDN Element	Range	Reference
Coils	0-1500 for customer use (0-511 timers or relays)	Section 2.4
Variables	V0-V899	Section 2.7
Statements	2300-2999 and 3300-3999	Section 2.8

TABLE 2-2 LDN NUMBERING INFORMATION

SECTION 3 - ENTERING AND EDITING

3.1 GENERAL

All necessary hardware and software should be in place before attempting to enter and edit an LDN. SECTION 3.3 describes how to initialize the PiC. SECTIONS 3.4 through 3.13 describe the commands for entering and editing. Each command is described according to the function performed and the prompts generated. Table 3-1 provides a summary of the commands used to enter and edit an LDN.

3.2 ENTERING THE PROGRAM MODE

If your system was purchased before September, 1985 and you do not have the AUX 1 update, set the Mode Select Switch to the PROGRAM position and press the initialize button.

If your system has the AUX 1 Menu update and you are using an IBM or compatible PC and GLLADD software (2.0 or higher), follow the AUX 1 Mode entry instructions in the GLLADD Manual.

If a standard programming terminal is used with the AUX 1 update, connect it to the Terminal Port on the PiC Control Panel and set the Mode Select Switch to the AUX 1 position. Turn the power on.

Enter your User Authorization Code and press the Return key to display the AUX 1 Menu. Enter a "2" (PROGRAM Mode) and press the Return key.

NOTE

If the system asks for the System's Default Authorization Code instead of your User Authorization Code, refer to SECTION 1.5.2.

After the PROGRAM Mode is entered, if the display responds with the following message, the PiC is ready to respond to entering and editing commands.

```
 PiC409 LDN COMPILER VER. 1.X
(C) 1985 GIDDINGS & LEWIS

>>. . .
```

If you receive the checksum error message ">>. . . CSM ERR!" in addition to the prompt ">>. . .", the system must be initialized as described in SECTION 3.3.

Practice entering the commands with a sample ladder after reading the command descriptions in SECTIONS 3.4 through 3.13.

3.3 INITIALIZATION

To initialize the PiC, enter the following information on the keyboard after the appropriate prompts:

Message On Screen	Your Response
1. ">>. . . CSM ERR!"	"/INIT"
2. "INITIALIZE RUNTIME? Y-N"	"Y", Return
3. CLEAR MEMORY? (IF INVALID USER MEMORY SELECT "Y")"	"Y", Return
4. HOW MANY NON-VOLATILE VARIABLES (STARTING WITH VARIABLE V0?)	See text below

(Refer to SECTION 2.7.1 for a description of non-volatile variables.)

Enter the number of non-volatile variables desired and press the Return key. The numbers "1" though "900" correspond to variables V0 through V899. Enter "1" to make variable V0 non-volatile or "2" to make variables V0 and V1 non-volatile. Entering "200 will make variables "V0 through V199 non-volatile, and entering "900" will make all of the variables in the system non-volatile.

Entering "0" will make all variables (V0 through V899) volatile.

5. HOW MANY RETENTIVE RELAYS (STARTING WITH RELAY 512?)	See text below

(Refer to SECTION 2.4 for a description of retentive relays.)

Function	Key (s) To Press	Description Of Function
Escape	ESC	Press the ESC key to abort PRINT, MOVE, INSERT, DELETE or other commands
Display (print) LDN on terminal screen.	P	To display an LDN on the screen: 1. Press the P key 2. Press the B key to start the display at the beginning of the LDN or... enter the first statement number or LDC number to display. 3. Press the Return key. 4. Press any non-numeric key to scroll one line at a time, press any numbered key from 1 to 7 to display the same number of lines at one time. Press the 0 key to scroll through the entire LDN.
Name LDN	N	Press N and enter the name of your choice for the LDN. Press the Return key.
Insert LDC's Or Statements	I	To insert one or more LDC's and or statements: 1. Press the I key 2. Enter the number of the LDC or statement the new LDC or statement will follow or... 3. Press B to insert at the beginning or E to insert after the end of the LDN.
Delete LDC's or Statements	D	To delete one item, press the D key and enter the number of the LDC or Statement to delete. Press the Return key. To delete a block of several items, press the D key and enter the number of the first LDC or statement in the block. Press the hyphen (-) key and enter the number of the last LDC or Statement in that block. Press the Return key.
Move LDC's or Statements to Another Location In The LDN.	M	To move one item, press the M key and enter the number of the LDC or Statement to move. Press the Return key. Enter the number of the LDC or statement the item is to be placed after. Press the Return key.
Delete an entry or character	Shift RUB or DEL	Hold the shift key and press the RUB or press the DEL key to delete an incorrectly typed character or entry. Enter the correct item in its place.
Allocate Call Routine Memory	A	To allocate user memory for Call Routine storage, press the A key, enter the number of bytes you wish to allocate and press Return.
Change Timer Increment	CTRL T	To change the timer increment for timer coils hold the CTRL key down and press the T key. The timer increment will change either from 100 ms to 10 ms or from 10 ms to 100 ms.
Enable/disable Printer	CTRL P	To enable a printer connected to the RS-232C port addressed at #2236, hold down the CTRL key and press the P key. If the printer is already enabled, this command will disable it. CTRL/P also operates in the AUX 2 Mode.

TABLE 3-1 ENTERING/EDITING COMMANDS IN THE PROGRAM MODE

Enter the number of retentive relays desired and press the Return key. The numbers "1" though "1000" correspond to relays 512 through 1511. Enter "1" to make relay 512 retentive or "2" to make relays 512 and 513 retentive. Entering "200 will make relays "512 through 711 retentive, and entering "900" will make the maximum number of relays (relays 512 through 1511) retentive.

Entering "0" will make all relays (512 through 1511) non-retentive.

6. AVAILABLE
   MEMORY = XX.....See text below

This value (XX) will equal the number of bytes available for your total user memory. The maximum value possible is 40K or 40,960 bytes.

7. CURRENT SIZE LIMIT = XX
   ENTER SIZE LIMIT OF LDN
   IN K BYTES (2-40) .....See text below

This value (XX) will equal the number of bytes available for your total user memory. Enter a number from "2" to "40" to indicate the number of K bytes you wish to reserve for your LDN (one K = 1024 bytes). The number cannot exceed the total user memory available in your PiC. If the LDN limit is less than the total user memory available, the remaining memory can be used for data storage without the risk of the LDN overlapping it.

If you are using Call Routines on an EPROM Module, the maximum size limit of the LDN will be reduced by 4K. For example: If you have 40K available in your PiC and you are using the Call Routine EPROM Module, only 36K can be reserved for the LDN.

8. IN WHICH BANK (1 - 8)
   WILL THIS LDN RESIDE? ..See text below

Enter the desired bank. If you are not using the bank select option, enter a "1". If "1" is entered, the following message will appear:

   BANK 1 SELECTED.
   ENTER THE HIGHEST
   BANK TO BE USED
   (1 - 8).....See text below

At this point enter the number of memory banks to be used in the PiC. If you are not using the bank select option, enter a "1".

9. RUNTIME INITIALIZATION COMPLETE!
   PIC409 LDN COMPILER VER 1.X
   (C) 1985 GIDDINGS & LEWIS

   >>. . .

This indicates that the initialization procedure is completed. You may now enter an LDN.

3.4 ESCAPE (ESC)

The Escape command is used to either erase all of a partially entered LDC or statement or exit the active command such as PRINT, etc. The ESCAPE command is implemented by pressing the ESC Key.

When using the ESCAPE command to erase, the ESCAPE command will result in the generation of a "BLK DEL!" (block delete) prompt. The "BLK DEL!" prompt means the partially entered LDC or statement has been deleted.

The "BLK DEL!" prompt results only if the ESCAPE command is activated while an LDC or statement is being inserted (via the INSERT command). After the "BLK DEL!" prompt is generated, the INSERT command is still active.

When using the ESCAPE command to exit another command, the ESCAPE command will result in the prompt "**ESC**" followed by the >>. . . prompt. This prompt indicates the active command has been exited and a new command may be activated.

3.5 PRINT (P)

The PRINT command is used to display the LDN. The LDN may be displayed on a CRT, terminal or a printer. The PRINT command is activated by pressing the P Key. When the PRINT command is activated, the following prompt will be displayed: >>... PRINT STARTING AT #".

After this prompt, two options are available with regard to which portion(s) of the LDN will be displayed. Select one of the following options:

1. To start the display at the beginning of the LDN, press the B Key.
2. To start the display at a given statement or LDC, enter the coil or statement number followed by a Return.

If, after selecting one of the preceding options, display of additional LDC's or statements is desired, select one of the following procedures:

1. To display one line of the LDN at a time press the 1 key or any non-numeric key (except ESC).
2. To display 1 through 7 additional LDC's and/or statements, press the corresponding numeric key (1 through 7). The next 1 through 7 consecutive LDC's or statements may be displayed by repeating this process, until the entire LDN has been displayed.
3. To display the entire LDN, press the zero key. On a video display the LDN will be displayed very quickly. The display will stop when the end of the LDN is reached. The display may be temporarily interrupted by pressing any key except the ESC Key. To restart the display, enter a zero or 1 through 7.

NOTE

The zero entry is typically used with a printer to automatically print the entire LDN. The simultaneous pressing of the control (CTRL) and P Keys is used to enable and disable the printer port. Pressing CTRL P will enable the printer port if the printer port is currently disabled or disable the printer port if the printer port is enabled.

At the beginning of a print sequence, the information shown in FIGURE 3-1 is displayed.

Each time a statement containing a Call Routine is displayed, the format depicted in FIGURE 3-2 will be used.

3.6 NAME (N)

The NAME command is used to provide an identifying label for the LDN. The LDN name may contain up to fifteen characters. Any alphanumeric characters may be used in the name. After pressing

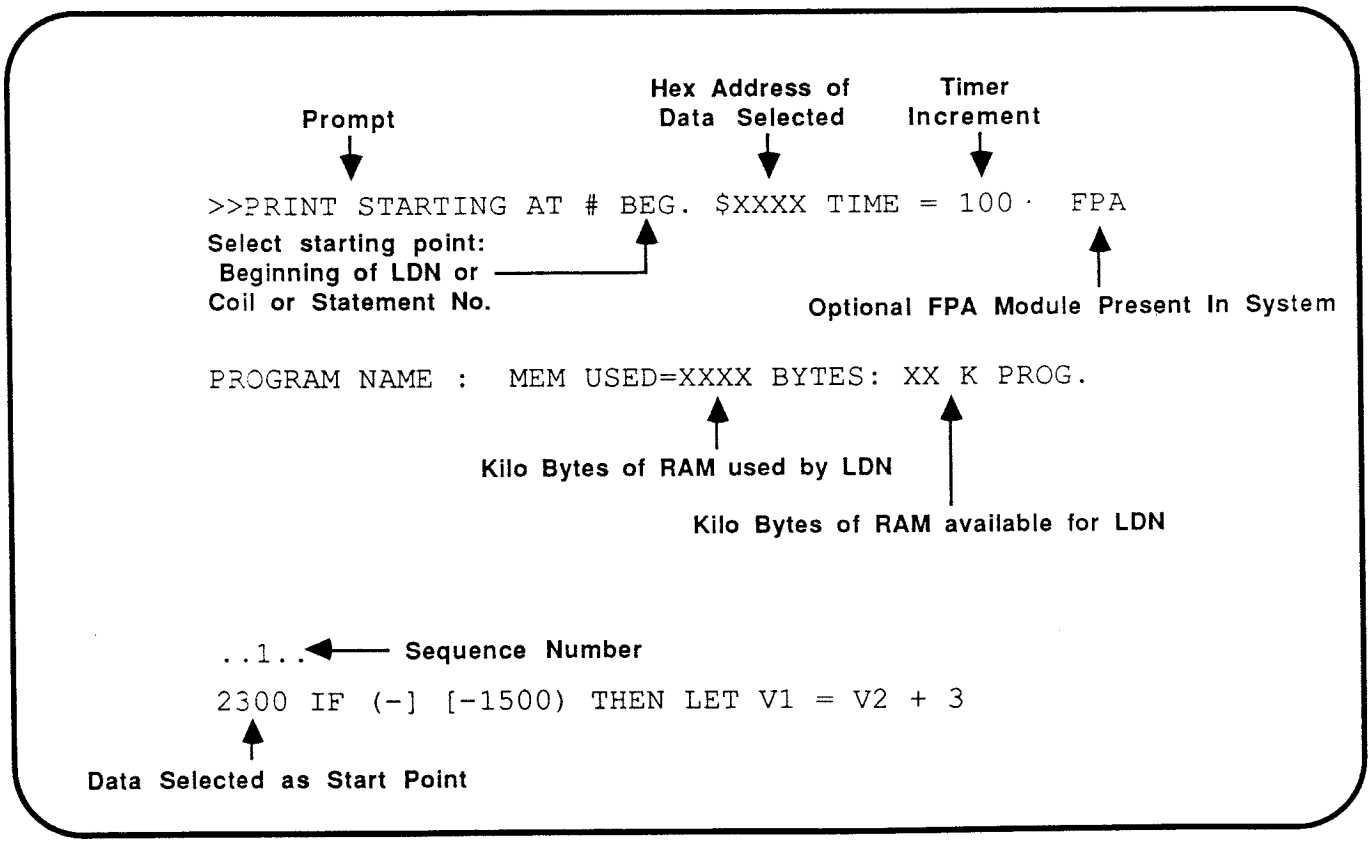

FIGURE 3-1 PRINT

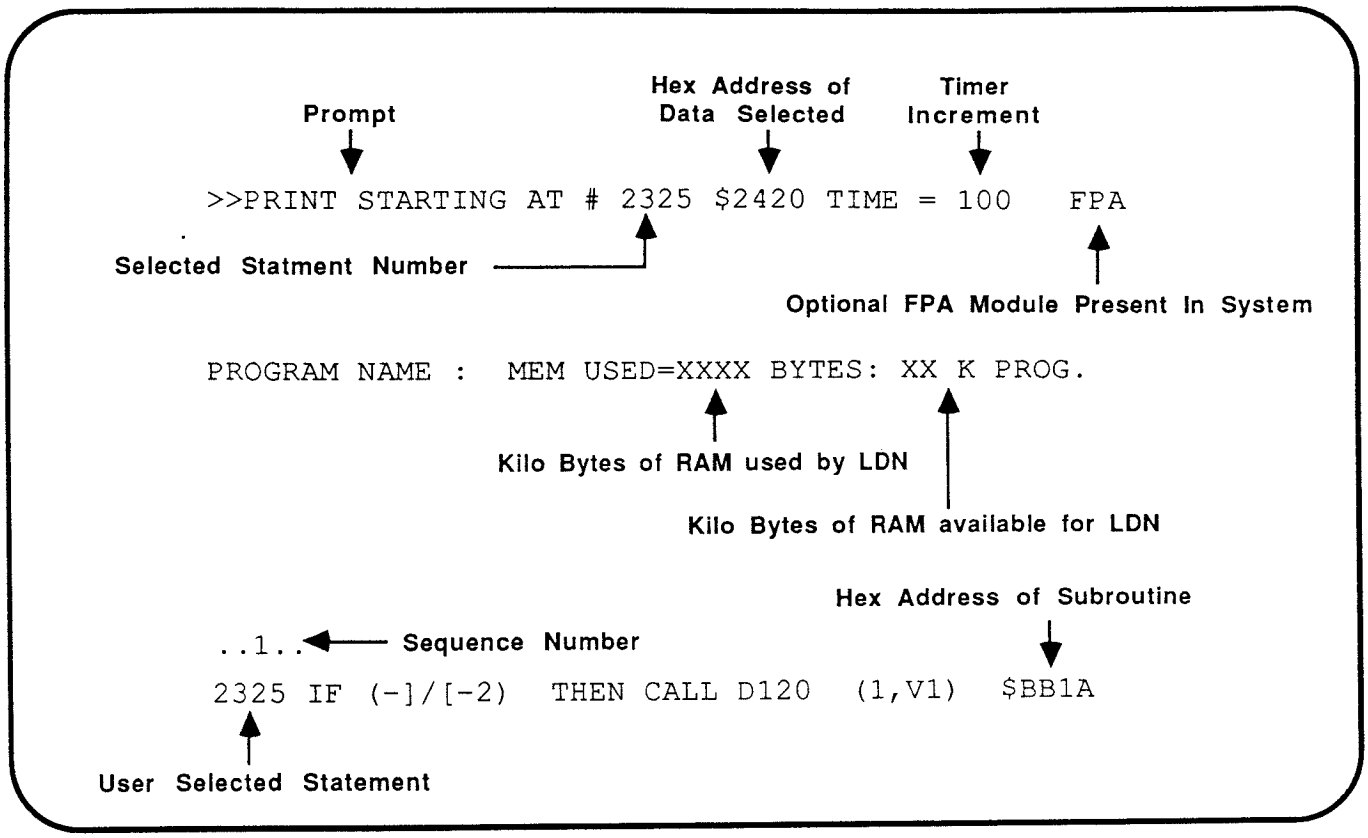

FIGURE 3-2 PRINT CALL STATEMENT

the N key, the following prompt will be generated: >>. . . NAME =".

Next, enter the desired name followed by a Return. The newly assigned name will now appear on all printouts of the LDN. The name may be changed by implementing the NAME command and typing in a new name.

3.7 INSERT (I)

The INSERT command is used to either begin a new LDN or insert LDC's or statements after an existing LDC or statement.

Pressing the I Key will implement the INSERT command and generate the following prompt: >>. . . INSERT AFTER #".

After the prompt is displayed, three options are available with regards to where the insertion is to be made. The insertion may be made at the beginning, the end or after a specified coil or statement number.

1. To make the insertion at the beginning of the LDN, press the B Key and then enter the desired data.

NOTE

The B Key is used to begin a new LDN. Pressing the B Key causes the software to point to the area designated as the beginning of LDN memory.

---

2. To make the insertion at the end of the LDN, press the E Key and then enter the desired data.
3. To make an insertion at a location other than the beginning or end of the LDN, enter the coil or statement number that will precede the new LDC or statement. Press the Return key and enter the desired data.

3.8 DELETE (D)

IMPORTANT

Before using the DELETE command, ensure a hard copy or recording of the LDN has been made. A deleted LDN (or any portion) is not recoverable.

The DELETE command is used to delete (remove) either a single LDC or statement or a number of consecutive LDC's or statements (up to the entire LDN). Pressing the D Key will activate the DELETE command and cause the following prompt: `>>. . . DELETE BLOCK #'`.

A single LDC or statement may be deleted by entering the coil number of the LDC or the statement number of the statement to be deleted followed by a Return. Only the selected LDC or statement will be removed from the LDN.

A series of consecutive LDC's or statements may be deleted by entering the first LDC (coil number) or statement number to be deleted followed by a comma or dash (" , " or "-") and the last LDC or statement to be deleted. Press the Return key. This sequence will delete the specified lines and all those between.

NOTE

The deleted sequence is the order in which statement or LDC's were entered.

Successful execution of the DELETE command will result in an "OK" being displayed. The PiC automatically enters the INSERT mode after a DELETE sequence. LDC's or statements inserted at this time will occupy the locations vacated by the deleted LDC's or statements. If no LDC's or statements are to be inserted, press the ESC key to Escape.

NOTE

Any number of LDC's or statements can be inserted after a Delete operation. The PiC automatically expands or compacts the available space as necessary.

3.9 MOVE (M)

The MOVE command is used to transfer an LDC or statement to a new location in the LDN. The MOVE command is activated by pressing the M Key. When the MOVE command is activated, the following prompt will be generated: `>>. . . MOVE BLOCK #"`.

After the move prompt is generated, enter the number of the LDC or statement to be moved and press the Return Key. This entry sequence will result in the following prompt "`MOVE BLOCK # XXX. . .AFTER #`". The following three options are now available for specifying the destination of the LDC or statement to be moved:

1. To move the selected LDC or statement to the beginning of the LDN, press the B Key.
2. To move the selected LDC or statement to the end of the LDN, press the E Key.
3. To move the selected LDC or statement to a specific location in the LDN, enter the number of the LDC or statement that will precede the data that is to be moved.

A successful execution of the MOVE command will result in an "OK" being displayed. A >>. . . prompt is also displayed which indicates a new command may be selected.

3.10 RUB (DEL)

The RUB feature is used to backspace when changing a numeric entry or variable label in the PRINT, INSERT, DELETE or MOVE modes. When RUB is activated, the cursor will back up to the beginning of the present entry. The display will have the format illustrated in FIGURE 3-3. The RUB feature is implemented by pressing the RUB or DEL Key.

1	2	3
Incorrect Entry	Entry Deleted	New Entry
1 0 2 5	_ _ _ _ << - - RUB/DEL Prompt	1 4 0 0

FIGURE 3-3 RUB/DEL FORMAT

When the RUB prompt is displayed, a new number or label may be entered. The RUB feature does not provide total cursor control. The RUB feature must be implemented prior to completing the current entry (before the Return key is pressed).

NOTE

The RUB Key may have different labels; e.g. RUB, RUB OUT, DEL, etc., depending on the specific terminal used. Also the RUB feature may be a shifted character. Consult the terminal documentation for RUB feature implementations.

3.11 ALLOCATE (A)

The ALLOCATE command is used to reserve memory space for code and data that is required in Call Routines. Memory for Call Routines is allocated from the area known as user memory. Memory is allocated in bytes; the number of bytes that must be allocated depends upon the Call Routines used. To determine the number of bytes required, refer to the Call Routine Manual Table of Contents.

To initiate the ALLOCATE command, press the A key. When the ALLOCATE command is entered, the prompt in FIGURE 3-4 is generated. The PiC automatically generates the display up to and including the equals sign after NEW SIZE. Enter the desired allocation number and a Return. The allocation process is now completed. To verify the new allocation, press the A key again. The SUB. AREA will equal the new allocation.

3.12 TIMER CONTROL (CTRL T)

The TIMER CONTROL command is used to select the timer delay increment for all LDN timers. The PiC409 and PiC49 have two timer increments to choose from: 100 milliseconds (1/10 Second) and 10 milliseconds (1/100 second). Refer to SECTION 2.5 for information regarding timers.

Whenever the user memory is initialized (with the "/INIT" command), the timer increment is automatically set to 100 milliseconds. To change the increment to 10 milliseconds, press the "CTRL and T" keys simultaneously. The following line will be displayed:

```
...TIME INCREMENT VALUE CHANGED TO
10 MILLISECONDS
```

Pressing the "CTRL" and T keys simultaneously will also change a 10 millisecond timer increment to 100 milliseconds.

To determine which timer increment the PiC is using, press the P key. After the prompt "PRINT STARTING AT #, press the B key. The line will now read "PRINT STARTING AT # BEG $2420 TIME = ____". The value after "TIME=" will be either "10" (milliseconds) or "100" (milliseconds).

NOTE

The timer increment may be changed at any time by entering the PROGRAM Mode and pressing the "CTRL" and T keys. However, be sure the LDN is using the correct timer increment before implementing or recording the LDN.

3.13 PRINTER CONTROL (CRTL P)

The PRINTER CONTROL command allows an external printer to print whatever is shown on the programming terminal screen. This command can be used in the PROGRAM and AUX 2 Modes.

To enable the printer port hold down the "CTRL" key and press "P". If the printer port is already enabled, the same command will disable it.

If you are using the Mode Select Switch on the PiC Control Panel, the command must be entered each time you enter the PROGRAM or AUX 2 Modes if you want the printer port enabled.

Amount of Memory Currently Allocated For Call Routines ↓ **Enter New Memory Allocation Here** ↓

```
>> ... SUB AREA = XXXX BYTES FROM $XXXX TO $XXXX NEW SIZE = XXXX
```

FIGURE 3-4 ALLOCATE

If you are using the AUX 1 Mode, the printer port will remain enabled in all Modes until a second "CTRL P" command is given in the PROGRAM or AUX 2 Modes.

Each time the printer port is enabled, the printer will execute a form feed, advancing the paper the equivalent of one sheet.

SECTION 4 - LOAD-RECORD-VERIFY

4.1 GENERAL

The Programmable industrial Computer utilizes magnetic tape or floppy disks for mass storage (such as saving a complete LDN). Tape is available in two different mediums: cassette and data cartridges. 5-1/4" floppy disks are used with an IBM PC or compatible personal computer and the G&L GLLADD software.

NOTE

If you are using disks, refer to the GLLADD documentation for complete instructions on loading, recording and verifying LDN's and data.

For storage on tape, the data cartridge is considered superior to the cassette primarily because its data transfer rate is eight times faster (9600 baud for data cartridge vs. 1200 baud for cassette).

The total available storage space for either cartridges or cassettes is comparable. A cassette is capable of retaining two programs, each up to 40K bytes in length. This capacity allows the entire user memory to be recorded in one half the available storage space. Cassette storage space is divided between sides one and two. Data cartridge storage space is divided between tracks one and two.

IMPORTANT

Magnetic tapes and disks are considered reliable for storing large amounts of data. However, certain guidelines should be followed to ensure long life and satisfactory results.

Never subject a tape or disk to strong magnetic fields. Typically, strong fields may be present in the vicinity of transformers, motors, CRT's, etc.

Never subject a tape or disk to extremes in temperature. See the tape unit manual specifications.

Keep the cassette or cartridge in a protective case when not in use. Disk should be kept in their protective sleeve and a case. This will keep them free of debris that may damage the magnetic material or the tape unit or disk drive.

Refer to the device's User's Manual before attempting to operate it. Connection and switch setting specifications are detailed in the PiC User's Manual for the tape units, and the GLLADD documentation for personal computer disk drives.

4.2 RECORD

The RECORD Mode is used to transfer data from PiC user memory to magnetic tape. Ensure that all switch settings and connections comply with the instructions detailed in the PiC User's Manual.

Use the following procedure to record data:

1. Determine and write down the track or side of the tape on which the recording will reside. Note: The same side must be used when loading the data back into the PiC from tape.
2. Insert the tape in the tape unit.
3. Place the tape unit Power Switch in the ON position. Allow the tape to rewind.
4. Select the RECORD Mode from the AUX 1 Menu or rotate the Mode Select Switch on the PiC Control Panel to the RECORD position and momentarily depress the INITIALIZE Button.
5. Status Light one will briefly extinguish and then illuminate for the duration of the record operation.
6. When the record operation is complete, STATUS Light 1 will extinguish and STATUS Light 2 will illuminate, indicating the successful completion of the record operation.

4.3 VERIFY

The VERIFY Mode is used to make a byte for byte comparison between the contents of memory and the data on tape. The VERIFY Mode should be employed immediately after the Record operation to ensure that the recording is an exact duplicate of memory.

To employ the VERIFY Mode, proceed as follows:

1. Use the same settings on the tape unit that were employed to produce the recording.
2. Select the VERIFY Mode from the AUX 1 Menu or rotate the Mode Select Switch on the PiC Control Panel to the VERIFY position and

momentarily depress the INITIALIZE Button.

3. When the verify operation is complete, STATUS Light 1 will extinguish and STATUS Light 2 will illuminate, indicating successful completion of the verify operation.

4.4 LOAD

The LOAD Mode is used to transfer data from a tape to the PiC memory. Ensure that all switch settings and connections comply with the instructions detailed in the PiC User's Manual.

NOTE

Sufficient memory must be available in the PiC to accommodate the data being transferred from tape.

Use the following procedure to load data from tape into the PiC:

1. Select the correct track on the tape unit (the track number should have been written down when the tape was recorded).
2. Insert the tape into the tape unit.
3. Place the Power Switch on the tape unit in the ON position.
4. Select the LOAD Mode from the AUX 1 Menu or rotate the Mode Select Switch on the PiC Control Panel to the LOAD position and momentarily depress the INITIALIZE Button.
5. STATUS Light 1 will briefly extinguish and then illuminate for the duration of the load operation.
6. When the load operation is complete, STATUS Light 1 will extinguish and STATUS Light 2 will illuminate, indicating successful completion of the load operation.

4.5 VARIABLE AND CONTROL RELAY BACKUP

This feature allows you to save the contents of non-volatile variables and the state of retentive relays on tape or disk. This provides added protection in case of a memory failure. In the event that memory is lost, the stored data can be loaded back into the PiC using the LOAD command.

4.5.1 Saving Data

To save non-volatile variable or retentive relay data, enter the AUX 2 Mode from either the AUX 1 menu or by selecting AUX 2 with the Mode Select Switch and pressing the INITIALIZE button. When the AUX 2 menu appears on the screen, select option 5 (Variable and C.R. Backup) and press the Return key.

The PiC will display the following instructions:

```
TO RECORD NON-VOLATILE
VARIABLES THROUGH THE PORT,
ENTER "V", CARRIAGE RETURN.

TO RECORD THE STATE OF NON-VOLATILE
CONTROL RELAYS THROUGH THE PORT,
ENTER "C", CARRIAGE RETURN.

TO LOAD NON-VOL. CRS OR VARIABLES,
USE THE LOAD MODE OF AUX 1
OR THE ROTARY MODE SWITCH.
```

NOTE

If you are using an IBM or IBM compatible persional computer and the GLLADD version 2.0 or higher software, you can save this information on disk. However, you must be using the AUX 1 Mode and all communication with the computer must be redirected through the terminal port. Read your GLLADD documentation for instructions on saving data on disk.

Press the "V" key if you want to save the contents of your non-volatile variables. Press the "C" key if you want to save the state of your retentive relays.

If you are saving the data on tape, the PiC will send the information to your STR LINK device and then automatically verify the data for you.

After a successful record and verify operation, the PiC will respond with the following message :

```
GOOD
CHANGE MODES TO EXIT
ENTER ANY KEY TO
START THIS MODE OVER.
```

When you are finished recording variables and want to record retentive relays, or vice-versa, press any key and repeat the operation. Otherwise, move to another mode.

If you are using the AUX 1 Mode, hold the "CTRL" key and press "Q" to return to the menu. Otherwise, rotate the Mode Select Switch on the PiC Control Panel to a different position and press the initialize button.

4.5.2 Loading Data

Before loading data back into the PiC, be sure the PiC is set up to save at least the same number of non-volatile variables and retentive relays (see the initialization procedure in Section 3.3). Otherwise, the data will be lost again when power to the PiC is shut off.

If you are loading data from tape, connect your STR LINK device to the PiC Control Panel and insert your tape containing the data into the device. Rewind the tape and enter the LOAD Mode. This mode is entered either from the AUX 1 menu or by rotating the Mode Select Switch on the PiC Control Panel to the LOAD position and pressing the initialize button.

If you are loading data from disk, refer to the GLLADD documentation for instructions.

Once the LOAD Mode is entered, the PiC will perform the load operation and automatically verify that the data is valid.

After a successful load and verify operation, the PiC will respond with the following message :

```
GOOD
CHANGE MODES TO EXIT
ENTER ANY KEY TO
START THIS MODE OVER.
```

To repeat the load operation, press any key and repeat the procedure. When you are satisfied with the operation, you can move to another mode.

If you are using the AUX 1 Mode, hold the "CTRL" key and press "Q" to return to the menu. Otherwise, rotate the Mode Select Switch on the PiC Control Panel to a different position and press the initialize button.

SECTION 5 - APPLICATION EXAMPLES

5.1 GENERAL

SECTIONS 5.2 through 5.12 illustrate typical LDC's and statements. Each example depicts a complete circuit that is necessary to perform a specific function. The text and illustrations explain what the example is and how it is used. The examples represent a sample of commonly used circuits and should not be construed as a complete set of all possible circuits.

5.2 ONE-SHOTS

A "ONE SHOT" is a circuit which is intended to operate an output (either a hardware output or a Control Relay) for the duration of only one scan.

Different types of ONE-SHOT's exist for different applications. For example; the circuit in FIGURE 5-1 is useful for initializing a software routine. Call Routines "A" and "B" will be executed only on the first scan of the PiC; on subsequent scans, Call Routines "A" and "B" will not be executed because of the energized state of Control Relay 1000.

Any number of Call Routines may be one-shot by this method. The circuit containing Coil 1000 must appear after the Call statements. Also, Control Relays 1000 and 1001 must not be affected by any other circuits. The one-shot is simple since all Control Relays are de-energized before the first scan.

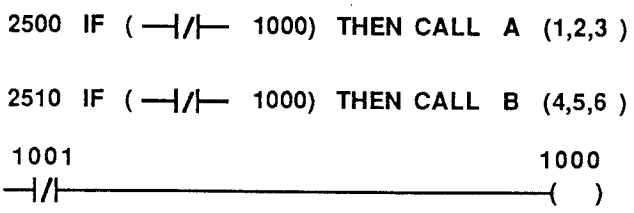

FIGURE 5-1 CALL ROUTINE ONE-SHOT

Another type of one-shot creates an output that lasts the duration of one scan when an input is energized. For example; if a switch is connected to input 2000 and execution of a Call Routine based on the closure of that switch is desired, the circuit of FIGURE 5-2 may be used. Energizing input 2000 will energize Control Relay 100 for the duration of the scan. Control Relay 100 will also be de-energized for all successive scans; regardless of whether or not input 2000 remains energized.

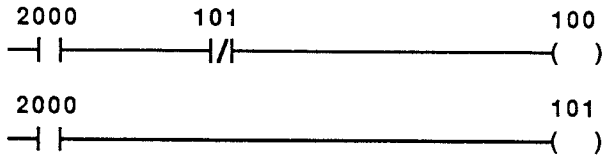

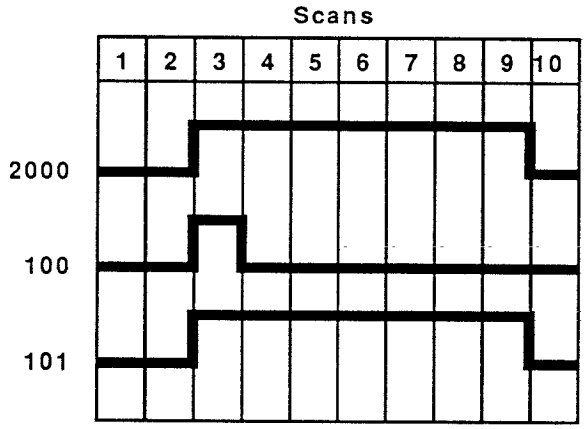

FIGURE 5-2 SWITCH ONE-SHOT

5.3 COUNTER

The circuit described here will count the number of times an input is actuated, up to a maximum of 8,388,607 counts.

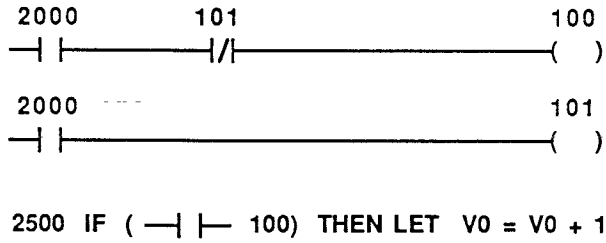

FIGURE 5-3 COUNTER

In the circuit of FIGURE 5-3, the number of actuations of input 2000 are counted in variable VO. Control Relay 101 is the one-shot of input 2000; used here to ensure that the variable is incremented only once each time input 2000 is energized.

5.4 FLIP-FLOP

The FLIP-FLOP described here causes an output to change state each time an input is energized. De-energizing the input has no effect on the output. In the circuit of FIGURE 5-4, Control Relay 200 is the output. On the first energization of input 2000, 200 turns on. Note that Control Relay 100 is a one-shot of input 2000.

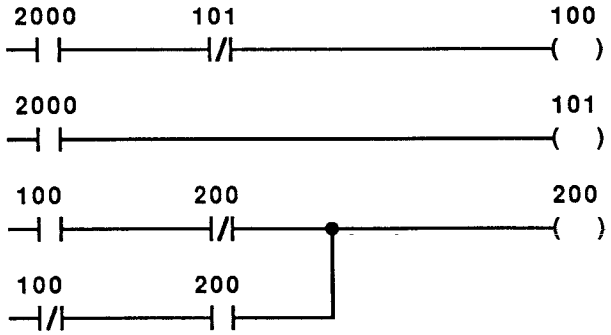

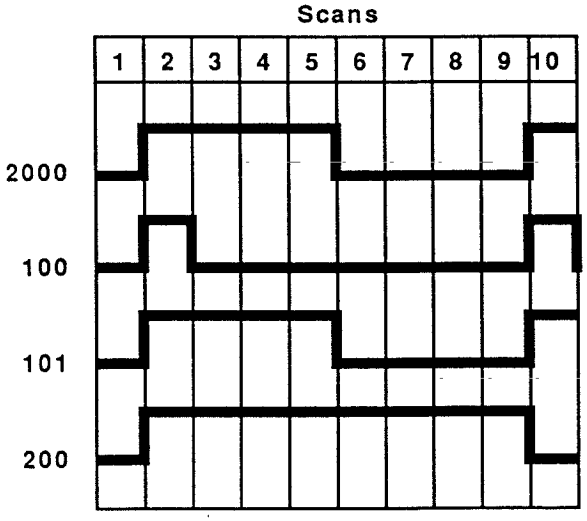

FIGURE 5-4 FLIP-FLOP

5.5 LATCHED RELAY

The circuit shown in FIGURE 5-5 causes Control Relay 100 to become latched in the energized state if input 2000 is energized. If input 2000 becomes de-energized, Control Relay 100 will continue to stay latched. Control Relay 100 can only be unlatched by energizing input 2001 (or a loss of power).

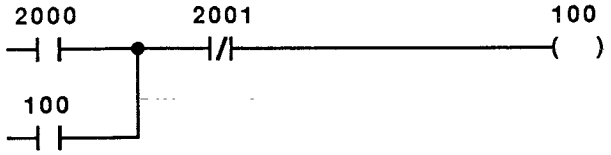

FIGURE 5-5 LATCHED RELAY

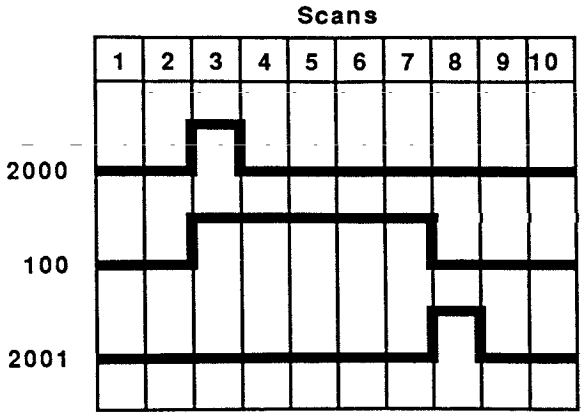

FIGURE 5-6 LATCHED RELAY TIMING

5.6 SCAN STEPPER

The circuit in FIGURE 5-7 causes six Control Relays (100 through 105) to become energized sequentially. Control Relay 100 is energized for the

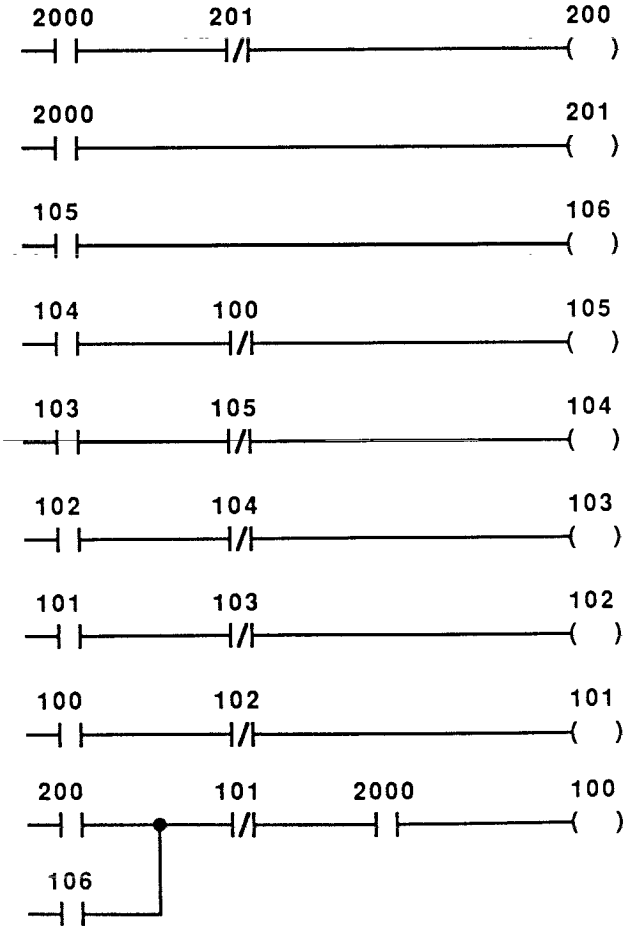

FIGURE 5-7 SCAN STEPPER

duration of one scan. On the next scan, Control Relay 100 is de-energized and 101 is energized. The process continues through Control Relay 105; the process then starts over at 100. Input 2000 must be activated to permit the stepper to run. Control Relay 200 is a one-shot of Input 2000.

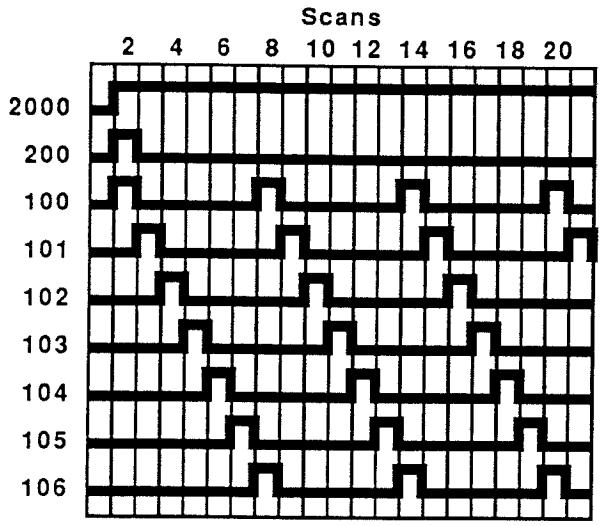

FIGURE 5-8 SCAN STEPPER TIMING

5.7 SCAN TIME MEASUREMENT

There are a number of methods for measuring the time required for the PiC to complete a scan of the user's Ladder Diagram Network (LDN). One of the simplest methods is shown in FIGURE 5-9. Output 2008 will "flip-flop" or toggle off and on with each scan. An oscilloscope connected to output 2008 will display a square wave with a one-cycle period of two scans.

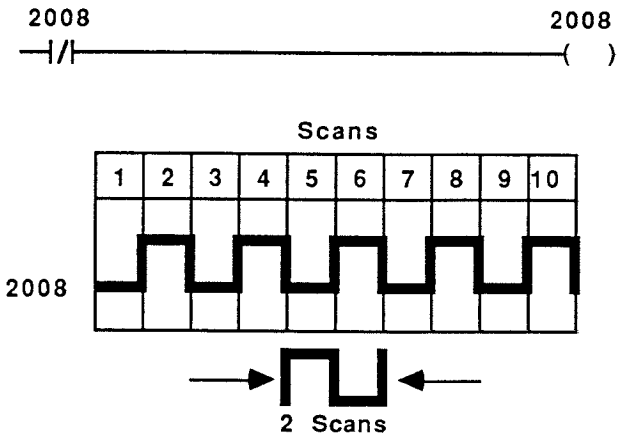

FIGURE 5-9 OSCILLOSCOPE MEASURED SCAN TIME

Another method may be used which does not depend upon external test equipment. The circuit in FIGURE 5-10 will cause output 2008 to be energized for one scan each time ten scans have elapsed. If output 2008 is wired to a lamp, each flash will represent ten scans. Scans must be relatively long (about 40 milliseconds or more) to give the lamp sufficient time to reach a good brightness level.

```
2500  LET V0 = V0 + 1

2510  SET 100 : V0 = 10

2520  IF ( —| |— 100 ) THEN LET V0 = 0)

 100                                  2008
—| |————————————————————————————————( )
```

FIGURE 5-10 LAMP MEASURE SCAN TIME

The method illustrated in FIGURE 5-11 places the average scan time (in milliseconds) into variable V1, which is upgraded every 5 seconds. The LDN is computing the following:

$$\frac{\text{5000 milliseconds}}{\text{5 seconds}} \div \frac{\text{No. of Scans}}{\text{5 seconds}} =$$

$$\frac{\text{5000 milliseconds}}{\text{5 seconds}} \times \frac{\text{5 seconds}}{\text{No. of Scans}}$$

Each time a new value is computed for V1, variable V0 is cleared and the process is started over.

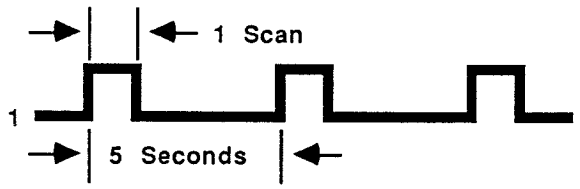


```
2500  LET V0 = V0 + 1

 1                                    1
—|/|————————————————————————————(TE)
                                  TIME = 50

2510  IF ( —| |— 1 ) THEN LET V1 = 5000 / V0

2520  IF ( —| |— 1 ) THEN LET V0 = 0
```

FIGURE 5-11 AVERAGE SCAN TIME

5.8 TIMERS

Two timers are supported by the PiC: Time Delay to Energize (TE), and Time Delay to De-energize (TD). FIGURE 5-12 illustrates how the timers operate through the use of a timing diagram.

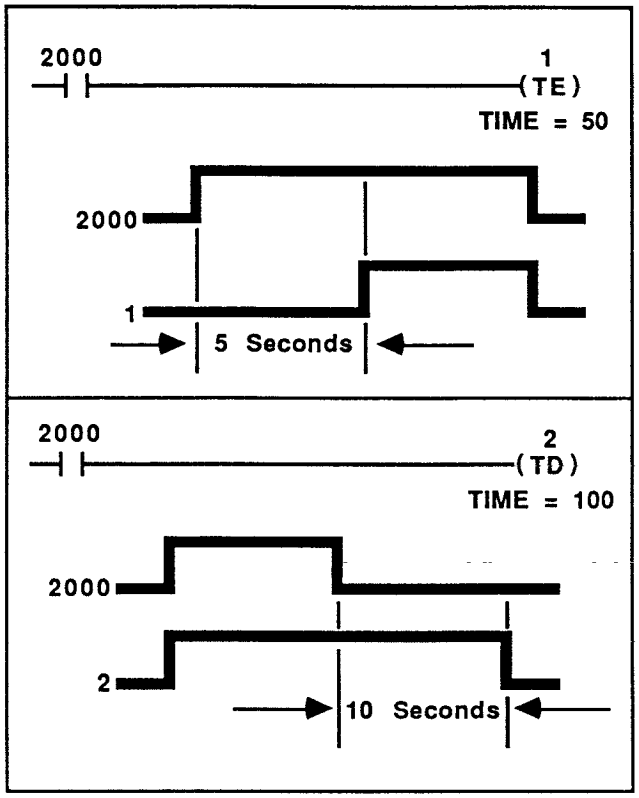

FIGURE 5-12 TE AND TD TIMERS

The timers are programmed in 1/10 second increments (in the default mode). Therefore, a delay of five seconds exists between the energizing of timer 1 and the closing of the associated contacts. A delay of ten seconds exists between the de-energizing of timer 2 and the opening of the associated contacts (FIGURE 5-12).

If a TE relay is placed in a circuit with an associated normally closed contact, a repetitive pulse results. See FIGURE 5-13.

On the initial scan, timer 1 is energized and begins timing. The timing continues through subsequent scans until two seconds have elapsed. At this point, the timer "operates"; and for the remainder of the scan, all contacts labeled "1" will be energized. On the subsequent scan, the timer is de-energized and the cycle repeats.

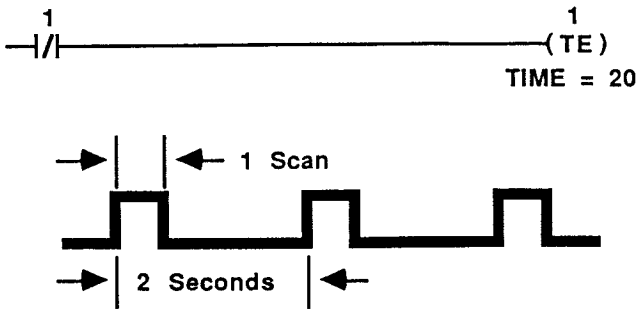

FIGURE 5-13 PULSER

5.9 ACCUMULATED TIME

The amount of time that an input is energized is measurable by means of the circuit in FIGURE 5-14. Energizing input 2000 causes a TE timer to start; when the timer reaches one second, variable V0 is incremented. On the subsequent scan, the TE relay drops out.

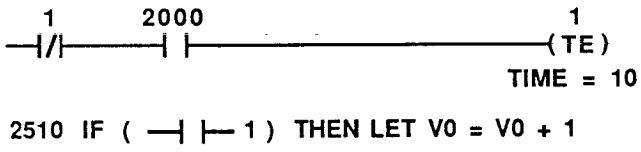

FIGURE 5-14 TIME MEASUREMENT

On the following scan, the timer starts again.

NOTE

This circuit loses the time occupied by one scan each increment. A larger value for TE would be beneficial for accuracy if long time measurements are anticipated.

5.10 NUMERIC KEYBOARD

A simple method of interfacing a numeric keyboard to the PiC is shown in FIGURE 5-15. One sixteen-input, DC Module or two eight-input, DC Modules may be used.

The ladder diagram network in FIGURE 5-16 permits a series of keystrokes to be read and saved in variable V26. Shown in FIGURE 5-16 are ten one-shots of the "0" through "9" keys; the one-shots are considered to be coils 100 through 109, respectively.

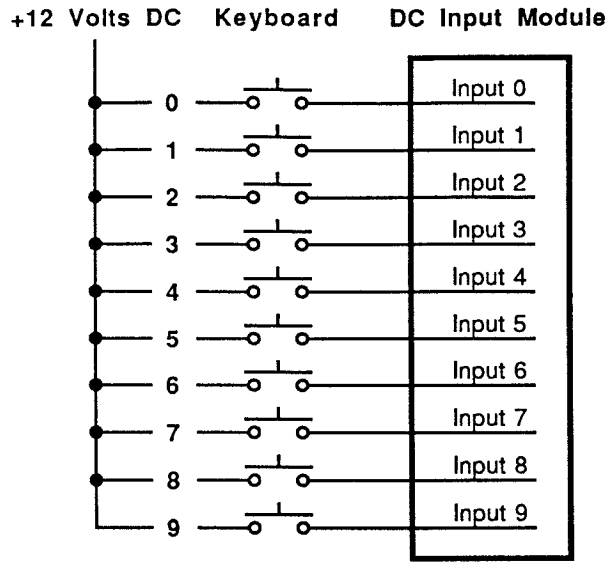

FIGURE 5-15 KEYBOARD INTERFACE

Pressing any key causes variable V0 to be set to some value from 0 to 9 through statements 2500-2590. Statement 2600 multiples V26 by 10. Statement 2610 adds the value of the key just pressed to the old value. Therefore, pressing keys "7", "5" and "0" causes the number 750 to appear in variable V26.

5.11 STEPPING SWITCH

A mechanical stepping switch may be incremented through a number of positions or steps by energizing and de-energizing the coil of the mechanical stepping switch once per step.

An LDN can be easily programmed to perform this function. Advantages of using the PiC include freedom from the failures of electro-mechanical devices and from the limitations in the number of steps or circuits per step.

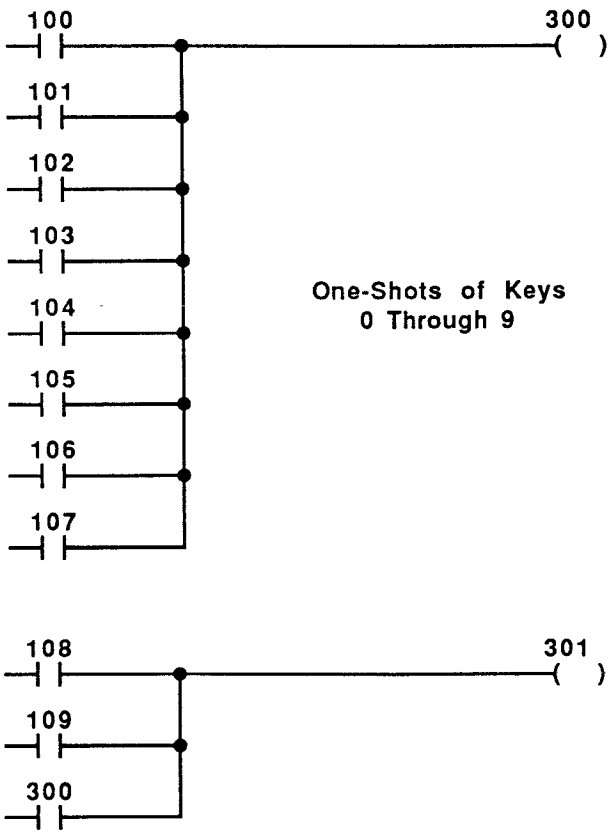


```
2500 IF ( ─┤├─ 100 ) THEN LET V0 = 0
2510 IF ( ─┤├─ 101 ) THEN LET V0 = 1
2520 IF ( ─┤├─ 102 ) THEN LET V0 = 2
2530 IF ( ─┤├─ 103 ) THEN LET V0 = 3
2540 IF ( ─┤├─ 104 ) THEN LET V0 = 4
2550 IF ( ─┤├─ 105 ) THEN LET V0 = 5
2560 IF ( ─┤├─ 106 ) THEN LET V0 = 6
2570 IF ( ─┤├─ 107 ) THEN LET V0 = 7
2580 IF ( ─┤├─ 108 ) THEN LET V0 = 8
2590 IF ( ─┤├─ 109 ) THEN LET V0 = 9
2600 IF ( ─┤├─ 301 ) THEN LET VV26 = V26*10
2610 IF ( ─┤├─ 301 ) THEN LET V26 = V26+V0
```

FIGURE 5-16 NUMERIC KEYBOARD LDN

FIGURE 5-17 illustrates the LDN for an eight-position stepper. The circuit may be lengthened or shortened to accommodate the user's needs. The following example requires 195 memory bytes and will scan in 0.27 milliseconds:

The inputs and outputs are used as follows:

Input	Name
2000	External input to stepper
2001	External reset switch

Output	Name
2040	Stepper Output 1
2041	Stepper Output 2
2042	Stepper Output 3
2043	Stepper Output 4
2044	Stepper Output 5
2045	Stepper Output 6
2046	Stepper Output 7
2047	Stepper Output 8

Control Relay	Name
100	ONE-SHOT of Input 2000
101	Part of ONE-SHOT
102	Starts Stepper at Output 1

The stepper is pulsed by opening and closing a switch that is connected to input 2000. The circuit will cause outputs 1 through 8 to be energized sequentially, then reset to output 1.

Input 2001 is an external reset. When active, all outputs will be turned off. The next pulse on input 2000 will restart at output 1.

For any extension beyond 8 outputs, the circuitry must be entered above the last output (2047). For each new output entered, a normally closed contact must also be added into the circuit containing Control Relay 102. This allows Output 1 to be energized on the first pulse.

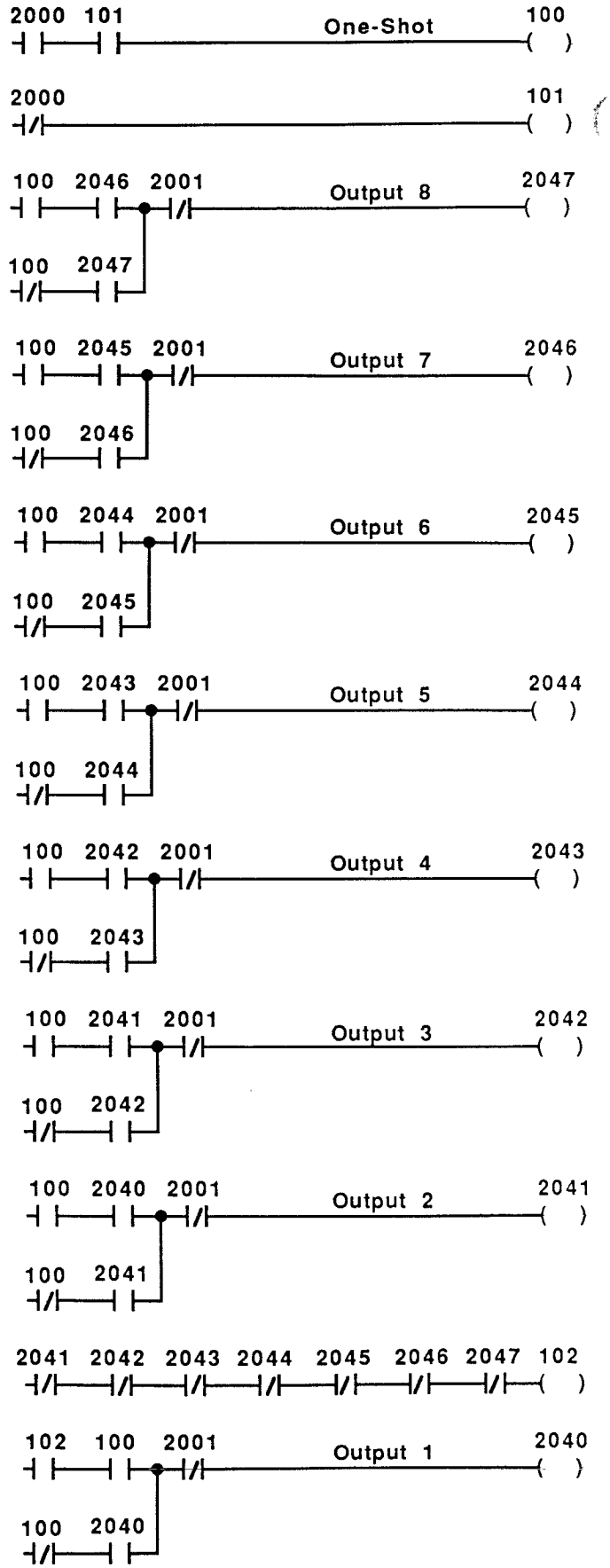

FIGURE 5-17 STEPPING SWITCH

5.12 SCALING

Scaling is a technique used to modify values so that those values fall within a selected range. Scaling is also used to establish a weight for a value, such as ones, tens, hundreds, etc. The following examples illustrate some scaling applications:

Example 1: Assume that V4 is a variable which represents the tens units in a thumbwheel switch bank. The variable V4 will be input from the thumbwheel as a digit between 0 and 9. The statement, 2300 LET V4=V4*10, gives V4 a tens unit weight, i.e. 0 to 90.

Example 2: Assume that V5 is a variable which must be scaled down (proportionately reduced). The variable initially has a range from 0 to 2000 and the desired range is 0 to 500. The statement, 2400 LET V5=V5/4, scales values of V5 so that the values have a range of 0 to 500.

Example 3: Assume that a number such as 3.14 is required as a multiplier. Since the PiC uses whole numbers only, 3.14 cannot be entered directly. The following sequence of statements illustrates one alternative.

```
2500  LET V6 = V6 * 314
2501  LET V6 = V6 / 100
```

If V6 originally equalled 365, the result would be 1146. Notice that the multiplication precedes the division.

Assume that a problem requires using a number that is too large when scaled. For example; scaling pi to four decimal places results in the number 31415. Using a multiplier this large would limit the range a variable could have to ±267. For example; in the following equations, V6 is limited to ±267.

```
2600 LET V6 = V6 * 13415
2601 LET V6 = V6 /  10000
```

To expand the range of the variable to ±26715 and retain significance, use the following method:

```
2500 LET V4 = V6 * 314
2501 LET V4 = V4 / 100
2502 LET V5 = V6 *  15
2503 LET V5 = V5 / 10000
2504 LET V5 = V4 + V5
```

NOTE

The methods used in Examples 3 and 4 may be used to retain significance to the desired number of places, as long as the variable range +8,388,607 to –8,388,608 is maintained for each calculation.

Example 4: Assume that a greater degree of significance is required from a division. The PiC will truncate all remainders. This means that only the whole number portion of a result is saved. A division such as 19/5 will result in an answer of 3. The following statement sequence can be used to generate a more significant answer.

```
2400 LET V5 = V5 * 10
2401 LET V5 = V5 / 5
```

V5 will now contain a whole number result that is expressed in tenths. That is, if the original value of V5 was 19 the result would be 38 (tenths). The programmer must remember that the result is in tenths, since the PiC only sees the two digit whole numbers (in this case 38).

SECTION 6 - REAL TIME DEBUG

6.1 GENERAL

The Real Time Debug Call Routine provides diagnostic facilities for system design and maintenance. These facilities are divided into two portions. The first portion provides the capability to display any selected ladder diagram circuit within the programmed Ladder Diagram Network (LDN). The display of a Ladder Diagram Circuit (LDC) indicates contact status, coil status, power flow, variable contents, actual timer values and programmed timer values.

The second portion allows the changing of variable contents and timer values, plus coil and output disabling and forcing. The second portion can only be selected through the first Call parameter.

6.2 DISPLAY OPTIONS

Real Time Debug is implemented with one of three display options. The user either incorporates a CRT Monitor, an RS-232C Video Display/Keyboard Unit or an IBM PC or compatible personal computer in the system. The options, with associated hardware requirements, are detailed in sub-sections 6.2.1 through 6.2.3.

6.2.1 OPTION 1-CRT MONITOR

Hardware Requirements:

1 CRT Monitor.
1 G&L Video Memory Module Addressed at #2232 or a G&L Video Memory Module with Real Time Debug PROM's Addressed at #2232 .
1 Video Interface Module Addressed at #2228.
1 Programmers Console Interface Module or RS-232C Interface Module Addressed at #2252.
1 RS-232C Keyboard.

NOTE

The normal communications modules for ladder programming are acceptable.

6.2.2 OPTION 2: Video Display/Keyboard Unit

Hardware Requirements:

1 RS-232C Video Display/Keyboard Unit (Lear-Siegler or TeleVideo).
1 Programmers Console Interface Module or RS-232C Interface Module Addressed at #2252 .

NOTE

The normal communications modules for ladder programming are acceptable.

6.2.3 Option 3 - IBM PC or Compatible Personal Computer

This option requires the use of the G&L GLLADD software, version 1.4 or 2.0 and higher. Refer to the GLLADD manual for instructions related to the use of the AUX 1 or Terminal Modes of operation. Once in either of these modes, you can use Real Time Debug as instructed in the remainder of this section.

6.3 INSTALLING REAL TIME DEBUG

The Real Time Debug Call Routine (Library Number C912) is stored in memory on the Compiler Module. The Call Routine must be "installed" before it can be used. Refer to SECTION 9 - CALL ROUTINE INSTALLER for the correct installation procedures.

6.4 PARAMETERS

The Real Time Debug Call Routine has only one parameter. However, the Call Routine must be called twice within the ladder diagram. The two Calls of the routine require separate values for the parameter of each Call. The first Call specifies which user options have been chosen. The second Call sets the update time the routine will use during each scan of the ladder diagram. The two Calls must be made in the proper sequence in the LDN.

6.4.1 Parameter For First Call

The options available for the first Call parameter are shown in TABLE 6-1. To determine the first Call parameter, select either column A or column B for rows 1 through 6. For the column A or B selection in each row, assign the decimal number that is indicated in column C. The six column C selections must be added together; the sum yields the first Call parameter.

Row	Column A	Column B	Column C
1	No Video Memory or Video Memory Without RTD PROMS	Video Memory with RTD PROMS	Column A = 1 Column B = 0
2	CRT Monitor	Video Display Keyboard Unit	Column A = 2 Column B = 0
3	No Cursor Control	RS-232C Cursor Control	Column A =4 Column B = 0
4	Use Software Slicing	Use Timer Slicing	Column A =8 Column B = 0
5	Allow Output Forcing	No Output Forcing	Column A =16 Column B = 0
6	TeleVideo Terminal or IBM PC	Lear Siegler or Telcon Terminal or CRT Monitor	Column A =32 Column B = 0
To determine the first Call Parameter, add your selections from Column C.			First Call Parameter =

TABLE 6-1 FIRST RTD CALL OPTIONS

The following examples illustrate the selection of the first Call parameter using TABLE 6-1.

Example 1 - For a system with:

No Video Memory ..... Column A = 1
Video Display/
Keyboard Unit..... Column B = 0
No Cursor Control..... Column A = 4
Software Slicing ..... Column A = 8
Allow Output Forcing ..... Column A = 16
Lear Siegler..... Column B = 0

1st Call Parameter: 1 + 0 + 4 + 8 + 16 + 0 = 29

Example 2 - For a system with:

Video Memory.....Column B = 0
CRT Monitor.....Column A = 2
No Cursor Control.....Column A = 4
Software Slicing.....Column A = 8
Allow Output Forcing.....Column A = 16
CRT Monitor.....Column B = 0

First Call Parameter: 0+2+4+8+16+0=30

The first call of the routine must be one-shot (only called for one scan in the ladder diagram). The call must be placed at the beginning of the ladder diagram and be followed by a one-shot statement. FIGURE 6-1 depicts an example of a first call statement followed by a one-shot ladder diagram circuit.

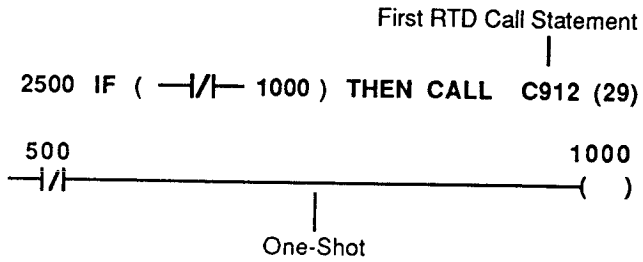

FIGURE 6-1 FIRST CALL EXAMPLE

6.4.2 Parameter For Second Call

The parameter for the second RTD Call establishes the time, in microseconds, that the Call Routine will utilize on each scan of the ladder diagram. If allowed to be completed every ladder scan, the routine would increase the scan time beyond an acceptable level. To avoid this, two methods have been incorporated into the system to permit only portions of the routine to be executed every scan.

The first and most common method, software slicing, allows a certain number of instructions to be completed during each ladder diagram scan. The second method, time slicing, is a more precise splitting of the Call Routine into time increments. The method of slicing is chosen through the first Call parameter option. (See TABLE 6-1, ROW 4)

The second RTD Call statement must be called each scan, regardless if software slicing or time slicing is used. In either case, the programmed time of the second Call's parameter must be between 256 and 65,535. Programming this value above 65,535 will energize the data error flag (1972) and the routine will not execute.

Example: Second Call Statement

2501 CALL C912 (10000)

6.5 OPERATION

Sections 6.6 through 6.8 provide detailed information for the use of Real Time Debug while operating in the PiC Run Mode. Features associated with this routine are explained and detailed with practical examples.

6.6 SCREEN DISPLAY

The Real Time Debug Call Routine operates in the PiC Run Mode. The routine produces a display of the ladder diagram while it is actually running. Information relevant to the ladder diagram and the execution of the Real Time Debug Call Routine will also be shown.

6.6.1 Screen Divisions

The screen display is divided into three sections by the Call Routine: top line, center screen and bottom screen. The top line displays prompts and operator entries or it may be blank. The center screen displays one LDC or statement of the LDN. The bottom screen displays the line number of the ladder diagram, CT ON or extinguished (to indicate forcing on or off respectively) and the miscellaneous display entries: A through G. FIGURE 6-2 depicts a typical RTD screen display.

6.6.2 Energized/De-Energized Items

Connecting lines with power flow are indicated by bright dashed lines. Lines without power flow are indicated by dim dotted lines. Energized contacts and coils are indicated by bright square style brackets or] [. De-energized contacts and coils are indicated by dim rounded parentheses or ( ). See FIGURE 6-2.

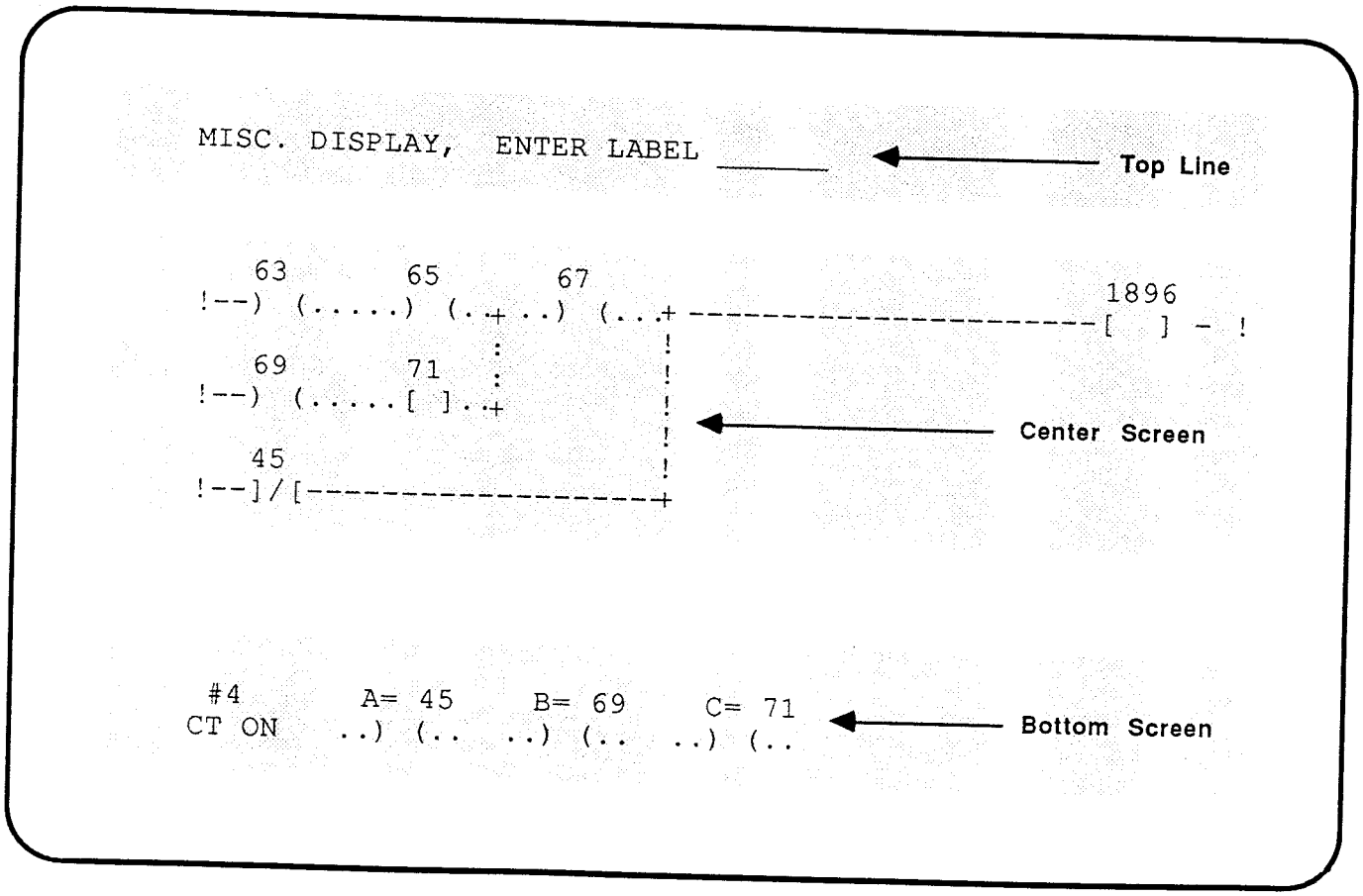

FIGURE 6-2 RTD SCREEN DISPLAY

6.7 RTD Key Commands

The commands summarized in Table 6-2 allow the operation of the Real Time Debug Call Routine. These commands are described in detail in the following sections.

6.7.1 PRINT (Display) Command

The Print Command is used to select one LDC or statement within the LDN for display. Use the following procedures to utilize the Print Command:

1. Press the P key. (The display response is a top line prompt; `START DISPLAY AT #`.)
2. Press one of the following:
   a. *B key* - to display the first LDC or statement of the LDN.
   b. *The coil number of the LDC* to be displayed followed by pressing the RETURN key.
   c. *The timer coil number of the LDC* to be displayed followed by pressing the RETURN key.
   d. *The statement number of the statement* to be displayed followed by pressing the RETURN key.

The following is an example of Print Command usage:

Problem: Display the LDC containing coil 100.

Solution:

Message On Screen	Your Response
1. (no message)	"P"
2. START DISPLAY AT #	"100", Return
3. (LDC containing coil 100)	

6.7.2 Next Line Command

Press the N key to display the next LDC or statement on the center screen.

6.7.3 Last Line Command

Press the L key to display the previous LDC or statement on the center screen.

6.7.4 Miscellaneous Command

The Miscellaneous Command is used to select individual contacts, coils, external outputs, timers or variables for continuous display in the bottom portion of the screen. Up to seven selections, corresponding to the letters A through G, may be made for continuous display. Use the following procedure to utilize the Miscellaneous Command:

1. Press the M key. The following prompt will appear on the top line of the screen:

   `MISC. DISPLAY, ENTER LABEL.`

2. Press a letter key, A through G. The letter pressed will be displayed on the top line followed by an equal (=) sign.
3. Enter an individual contact number, coil number, external output number, timer number or a variable followed by a Return.
4. The following information will be displayed on the bottom screen:
   a. The letter chosen for the display (A through G).
   b. The number of the contact or variable.
   c. The associated contact symbol or the contents of the variable.

Individual contacts, coils, external outputs and timers are shown as contact symbols. Variables are shown with the decimal value.

New data may be entered to any miscellaneous display letter by repeating the Miscellaneous Command entry procedure.

A miscellaneous display may be eliminated by pressing the M key, pressing one key A through G and then pressing the RETURN key.

The top line prompt, `MISC. DISPLAY, ENTER LABEL`, may be extinguished by pressing the ESC key.

If invalid data is entered after a miscellaneous letter selection, the data will be extinguished and the prompt will reappear when the RETURN key is pressed. Variables selected above the variables

Function	Key(s) to Press	Description of Function
Display (print) LDC or statement on screen.	P	To display an LDC or statement on the screen: 1. Press the P key 2. Press the B key to start the display at the beginning of the LDN or... enter the statement number or LDC number to display. 3. Press the Return key.
Display Next Line	N	Press N to display the next LDC or statement of the LDN.
Display Last Line	L	Press L to display the previous LDC or statement of the LDN.
Miscellaneous Display Command	M	To display individual contact, coil, external output, timer or variable information on the bottom screen, press the M key. After the prompt "MISC. DISPLAY, ENTER LABEL," enter a label (A through G) for the item followed by the number of the item to display (e.g. A = "V1" for variable V1 or B = "2000" for output 2000) and press the Return key.
Forcing Contacts, Coils and Variables	CTRL *A-G *See Description	To force a contact, coil, or variable hold down the control (CTRL) key and press the key corresponding to the desired label (A through G). Note: Coils must be disabled before forcing them.
Change Coil Disable State	CTRL T	Use the display command (P key) to display the LDC containing the coil you want to change. To change the disable state of the coil, hold down the control (CTRL) key and press the T key. An enabled coil will change to the disabled state and a disabled coil will change to the enabled state.
Change a Programmed Timer Value	CTRL Y For TE Timer Coils CTRL H For TD Timer Coils	Use the display command (P key) to display the LDC containing the timer coil you want to modify. To change the programmed timer value for a TE timer coil, hold down the control (CTRL) key and press the Y key. Enter the new programmed time limit and press the Return key. To change the programmed timer value for a TD timer coil, hold down the control (CTRL) key and press the H key. Enter the new programmed time limit and press the Return key.
Search for Disabled Coils	O	To search for disabled coils, display the first line of the LDN on the screen (press P followed by B). Press the O key to display the first disabled coil. Press the O key each time you want to display the next disabled coil.

TABLE 6-2 REAL TIME DEBUG COMMANDS IN THE RUN MODE

programmed in the ladder are considered invalid data. However, contact, coil, output or timer numbers will be accepted as valid data regardless of whether or not these numbers are referenced in the programmed LDN.

6.8 FORCING FUNCTION

The forcing function employs all previously described Real Time Debug functions. Additionally, forcing offers the ability to change programmed variable and timer values plus the disabling and forcing of coils and external outputs. The forcing feature is selectable through the first Call parameter selection. (See TABLE 6-1, ROW 5.)

6.8.1 Screen Display

The bottom screen display, CT ON, indicates forcing is active. The absence of the message CT ON indicates forcing was not selected in the first Call parameter; and, therefore, is not active.

6.8.2 Contact Forcing

Contact forcing is defined as the ability to force the energizing or de-energizing of internal relays 0 though 1999. Contact forcing is performed using RTD while operating in the PiC Run Mode. Use the following procedure to utilize contact forcing:

1. Use the Print command to display the LDC or Statement containing the contact you want to force (press P followed by the coil or statement number and a Return).
2. Press the M key (miscellaneous display) and enter one of the letters A through G that you want to use to designate for the contact. Enter the contact number followed by a Return.
3. When the contact appears at the bottom of the screen, Hold down the CTRL key and press the letter designated for the contact (A through G). The display will show the contact changing from a de-energized state to an energized state or from an energized state to a de-energized state.

NOTE

The contact will remain forced until the contact is forced again. If the contact is controlled by a coil or a statement within the ladder, the contact will be forced for one ladder scan only.

The following is an example of contact forcing:

Problem: Force contact 35

Solution:

1. Use the Print Command to display coil 52 (which contains contact 35).
2. Use the Miscellaneous Command to allocate contact 35 to display A.
3. Hold the CTRL key and press the A key.
4. Display response - contact 35 will be forced to the opposite state (on or off).

```
        35                                  52
!---)   |  (.....................(   )--!
        |                        |
Before Forcing              No continuity

        35                                  52
!---]   |  [--------------------(   )--!
        |                        |
After Forcing       Dashes indicate Continuity
```

FIGURE 6-3 CONTACT FORCING EXAMPLE

6.8.3 Disabling and Enabling a Coil or Output

A coil or external output must be disabled before forcing can be implemented on that coil or external output. Disabling is defined as disconnecting an LDC's control contacts from its coil or external output. Use the following procedure to utilize the Change Disable State function. The same procedure is used to disable or enable a coil or output.

1. Use the Print command to display the LDC containing the coil or output that you want to disable or enable (press P followed by the coil or statement number and a Return).
2. Hold the CTRL key down and press the T key. The display on the top line will read: "CHANGE 'DISABLE' STATE Y - N?".
3. Press the Y (yes) key. The screen will indicate if the coil is disabled by a disconnected power line from the controlling contacts to the coil or external output.

NOTE

A disabled coil or output remains a permanent part of the LDN until the coil or output is re-enabled.

6.8.4 SearchCommand (For Disabled Coils)

The Search Command is used to search through the LDN for disabled coils and disabled external outputs. Use the following procedure to utilize the Search Command:

1. Use the Print command to display the first line of the LDN (press P followed the B key to indicate you want to start from the beginning of the LDN).
2. Press the O key. The center screen will display the first disabled coil or external output in the LDN.

```
2500 IF )/( 1000 THEN CALL C912(29)

    500                          1000
!---)/(.....................(   )--!

    114                          2001
!---)   (      Disabled Coils  (   )--!

     35                          2002
!---)   (-----)   (             (   )--!

     4                           2003
!---)   (....................(   )--!
```

FIGURE 6-4 SEARCH COMMAND EXAMPLE

3. Each time you press the O key, the next disabled coil or external output will be displayed. This will continue until all of the disabled coils or external outputs in the LDN have been displayed.

The following is an example of a Search Command:

Problem: Identify, by display, the disabled coils or outputs in the LDN shown in FIGURE 6-4.

Solution:

Message On Screen	Your Response
1. (no message)	"P"
2. START DISPLAY AT #	"B"
3. (statement 2500)	"O"
4. (LDC containing coil 2001)	"O"
5. (LDC containing coil 2002)	"O"

6.8.5 Forcing Coils and External Outputs

Coils and external outputs may be forced, on or off, directly from the keyboard when using Real Time Debug. Prior to forcing, coils or external outputs must first be disabled (SECTION 6.8.3). If forcing is attempted without disabling the coils or external outputs, the change in condition from forcing will be transitory as the PiC will update the LDN in addition to the forcing operation. Use the following procedure to utilize the coil and external output forcing functions:

1. Use the Print command to display the LDC containing the coil or output that you want to force (press P followed by the coil, timer coil or statement number and a Return).
2. Hold the CTRL key down and press the T key. The display on the top line will read: "CHANGE 'DISABLE' STATE Y - N?".
3. If the coil or external output is already disabled, press the N (no) key. If it is not disabled, press the Y (yes) key. The screen

will indicate that the coil is disabled by a disconnected power line from the controlling contact to the coil or external output.

4. Press the M key (miscellaneous display) and enter one of the letters A through G that you want to use to designate for the coil or external output. Enter the number of the desired coil, timer coil or external output followed by a Return.
5. When the item appears at the bottom of the screen, Hold down the CTRL key and press the letter designated for the coil or output (A through G). The display will show the coil or external output changing from a de-energized state to an energized state or from an energized state to a de-energized state.

NOTE

Unless the coils and external outputs use the retentive relay Call Routine to retain their condition, all coils and external outputs will return to a de-energized condition if power is removed from the PiC, .

6.8.6 Changing Programmed Timer Values

In Real Time Debug, a timer LDC is displayed as a normal LDC with controlling contacts and the timer coil. Directly below the coil symbol are the subscripts TL and TA. TL represents the time limit programmed and TA the time accumulated.

The time limit value may be reprogrammed to a new value. The valid range of timer limit values is 0 through 65,529. The programmed value will remain as a permanent time limit unless it is reprogrammed with a different value. Use the following procedure to program a time limit value:

1. Use the Print command to display the LDC containing the timer coil you want to reprogram (Press P followed by the number of the timer coil and a Return).
2. After the LDC with the timer coil is displayed on the center screen, hold the CTRL key down and press the Y key for TE coils or the H key for TD coils. The display on the top line will read: "ENTER NEW TIME LIMIT."
3. Enter a new time limit and press the Return key. The new value will be displayed below the timer coil next to the letters TL.

NOTE

If the time limit for a timer coil is a variable instead of a constant (for example: "V12" instead of "250"), the time limit is changed by forcing the variable. Variable forcing is described in SECTION 6.8.9.

6.8.7 Time-Energized (TE) Coils

The time limit (TL) is the amount of time power must be applied to the TE coil before the coil will energize. The accumulated time (TA) is the actual amount of time that power has been applied to the coil from a controlling contact. When the values of TA and TL are equal, the coil will energize.

6.8.8 Time-De-Energized (TD) Coils

The time limit (TL) is the amount of time power must be removed from the TD coil before the coil will de-energize. The accumulated time (TA) is the actual amount of time that power has been removed from the coil by a controlling contact. When the values of TA and TL are equal, the coil will de-energize.

6.8.9 Variable Forcing

Variable contents may be forced to change content value. However, this does not inhibit other parts of the LDN from updating variables. As a result, some variables will only be forced for one scan; at which time the variable contents will return to the original value.

To avoid this, you can de-energize the conditional contact for the LET statement(s) controlling the variable or bypass the LET statement(s) controlling the variable with a GOTO statement.

The range of variable values is +8,388,607 to –8,388,608. Variable values outside this range will not be accepted as valid data.

NOTE

Variable values may be either in decimal or hexadecimal form. Using the hexadecimal form requires the number to be preceded by a $ sign.

Use the following procedure to utilize the variable forcing function:

1. Press the M key. The following top line prompt will appear on the top line of the screen:

   `MISC.'DISPLAY, ENTER LABEL.`

2. Press a letter key, A through G. The letter pressed will be displayed on the top line followed by an equal (=) sign.
3. Enter the number of the variable you want to force followed by a Return.
4. The following information will be displayed on the bottom screen:
   a. The letter chosen for the display (A through G).
   b. The number of the variable.
   c. The contents of the variable shown in a decimal value.
5. When the variable appears at the bottom of the screen, Hold down the CTRL key and press the letter designated for the variable (A through G). The top line will display the following message: `"ENTER DATA FOR VARIABLE 'XX'."`
6. Enter the desired value for the variable and press the Return key. The new value will be displayed at the bottom of the screen.

NOTE

This forced variable value will remain until the LDN updates the variable or if you force it to another value.

Unless this variable was designated as a non-volatile variable, its value will be reset to 0 if power is removed from the PiC.

SECTION 7 - MESSAGE FORMATTER

7.1 GENERAL

The Message Formatter is a program that arranges user-defined messages in the PiC's memory. The Message Formatter resides on the Compiler Module and is therefore available to the user if the Compiler Module is installed in the PiC.

Messages are used in conjunction with Call statements in the LDN and can be formatted in ASCII (American Standard Code for Information Interchange) or hexadecimal form. They are referenced by user-assigned message numbers and can be displayed on an LDN-controlled CRT or serial printer. Messages are stored in user memory above the LDN memory area.

Features of the Messages Formatter include the ability to insert, delete, edit, renumber, print, and format up to 255 messages. Messages may be up to 254 characters in length.

NOTE

Messages created using the Message Formatter are controlled by certain Call Routines. Refer to the PiC409 Family Standard Call Routine Manual for application notes concerning the Message Call Routines.

7.2 STARTUP

Perform the following procedures to enter the Message Formatter:

1. Enter the AUX 2 Mode either from the AUX 1 menu or by setting the PiC Mode Select Switch on the PiC Control Panel to the AUX 2 and pressing the initialize button.
2. The following menu of options will be displayed:

```
CHOOSE ONE:

1:  MESSAGE FORMATTER
2:  GTEK SUPPORT
3:  CALL ROUTINE INSTALLER
4:  BANK SELECT
5:  VARIABLE AND C. R. BACKUP
6:  DIAGNOSTICS

CHOICE?
```

3. Press the "1" key followed by a Return to start the Message Formatter.
4. The following acknowledgement message and a cross hatch (#) prompt will be displayed:

```
GIDDINGS & LEWIS PIC409

MESSAGE FORMATTER
(C) 1983 VERSION X.X
```

5. Enter the appropriate command(s) and messages, see Section 7.3.
6. To exit the Message Formatter, hold down the CTRL key and press Q to return to the AUX 1 menu. You may also use the Mode Select Switch to select a different mode of operation.

NOTE

If a message file created by the PC400 Message Editor exists in user memory, it will automatically be converted to a format that is compatible with the newer PiC409 Message Formatter. The user has the responsibility to save the converted message file on tape, disk or EPROM.

7.3 COMMANDS

The Message Formatter uses simple one character commands. The cross hatch (#) prompt indicates the Message Formatter is ready to receive these commands. If incorrect entries are made or if additional information is required, the PiC will provide additional prompts to help you finish your tasks.

7.3.1 INSERT (I Key) Command

The I (insert) command is used to create new messages. You must first select an identification number for the message (between 1 and 255). If the message number already exists in memory, an error message will be displayed.

After the prompt #, press the I key, enter an identification number for the message and press the Return key.

Type in the message that you want to use. Up to 254 characters are permitted. Return characters can be used for messages that contain more than one line.

When your message is complete, press the ESC (escape) key. The PiC will display the message to verify that it is in user memory.

The following example illustrates the keystrokes required to create a new message. The number 10 was selected as the identification number and the message itself is "THIS IS MESSAGE 10."

PiC Prompt	Your Response
#	I10, Return
MESSAGE NUMBER?	10, Return
10*	THIS IS MESSAGE 10, ESC
10 THIS IS MESSAGE 10.	

Function	Key (s) To Press	Description Of Function
Insert New Messages	I	To insert a new message, press the I key and enter the message number followed by a Return. Type in the message. Press ESC to finish.
Delete Messages	D	Press D followed by the message number. Press the Return key.
Edit Messages	E	To edit an existing message, press the E key followed by the message number. Press the Return key and type in a new message. Press ESC to finish.
Renumber Messages	R	Press R followed by the existing message number and a Return. Enter a new message number and press the Return key.
Display (Print) a Message	P	To display a message on a screen or printer, press the P key followed by the message number and a Return. To display all of the messages, press the 0 key instead of a message number.
Configure Message Display Format	F	To configure the message display format, press the F key followed by a return. Enter a number from 0 to 4 or a Return as shown in the configuration menu. Entering a 1, 2 or 3 will select the format indicated in the menu. Entering a 0 requires typing in 17 hexadecimal entries. Press the Return key to leave format as it is.
Display Command List (Help Screen)	H	Press the H key followed by a Return. A list of the Message Formatter commands will be displayed on the screen.
Enable/Disable Printer	CTRL P	Hold down the CTRL key and press P to enable a printer. If the printer is already enabled, this command will disable it.
Delete a Character	Shift RUB or DEL	Hold the shift key and press the RUB or press the DEL key to delete an incorrectly typed character or entry. Enter the correct item in its place. Note: The keystrokes for the RUB or DEL functions may vary between terminals from different manufacturers.
Enter Hexadecimal Data	CTRL X	To enter hexadecimal data instead of standard ASCII characters, hold down the CTRL key and press X just before inserting characters. Entries must be valid hexadecimal numbers. Hex entry works with the Insert and Edit commands

TABLE 7-1 MESSAGE FORMATTER COMMANDS

NOTE

Although both upper and lower case characters are permitted, use the upper case mode when creating messages for a video monitor (CRT) using the G&L Video Memory and Video Interface Modules. True lower case letters are not available with this equipment set up.

Both upper and lower case characters are permitted when using a printer or a programming terminal with lower case capability.

7.3.2 DELETE (D Key) Command

This command is used to delete messages created by the insert command. Only one message may be deleted at a time. To delete a message, press the D key and type in the message number after the prompt #. The PiC will acknowledge that the message was deleted. If the message number entered does not exist in memory, an error message will be displayed.

The following example shows the keystrokes required to delete a message. In this case, the message identification number is 20.

PiC Prompt	Your Response
#	D20, Return
MESSAGE DELETED	
#	

7.3.3 EDIT (E Key) Command

You can change an existing message by using the E (edit) command. To edit a message, press the E key followed by the message number and a Return.

The message number and the message will appear on the screen.

NOTE

If no message exists in user memory for the number you entered , the error message "MESSAGE DOES NOT EXIST" will be displayed on the screen.

Retype the message with the changes that you want to implement. When you are finished, press the ESC (escape) key to enter the new message into user memory.

The following example shows the keystrokes required to edit example message 10. The message will be changed from "THIS IS MESSAGE 10" to "THIS WAS MESSAGE 10."

PiC Prompt	Your Response
#	E10, Return
10 THIS IS MESSAGE 10	
10*	THIS WAS MESSAGE 10, ESC
10 THIS WAS MESSAGE 10	

7.3.4 RENUMBER (R Key) Command

This command is used to change the identification number of a message in user memory. To renumber a message, press the R key and type in the message number followed by a Return after the prompt #. The prompt "CHANGE TO?" will appear. Enter the new message number and press the Return key. The message and its new number will be displayed on the screen.

NOTE

The PiC will display an error message if you attempt to renumber a message that does not exist or if you renumber a message to another number that is already in use or out of range.

The following example shows the keystrokes required to renumber a message. In this case, the message 10 will be renumbered to message 100.

PiC Prompt	Your Response
#	R10, Return
CHANGE TO?	100, Return
100 THIS WAS MESSAGE 10	

7.3.5 PRINT (P Key) Command

The print command will display your messages on the screen or a printer. After the prompt #, press the P key followed by the number of the message you want to display. Press the Return key. The message will be displayed.

If the message does not exist in user memory, the error message "MESSAGE DOES NOT EXIST" will appear on the screen.

To display all of the messages in user memory, enter a 0 instead of a message number. The print command is the only command that will recognize 0 as a message number entry.

7.3.6 FORMAT (F Key) Command

The FORMAT Command allows you to change the size of the characters displayed on a video monitor (CRT). This command applies only to messages displayed on a video monitor and the G&L Video Memory and Video Interface Modules.

After the prompt #, press the F key followed by a Return. The current format will be displayed, and a menu of popular display configurations will be presented. The user may choose a new configuration by entering the menu choice followed by a Return or retain the current format by entering only a Return.

Options 1, 2 and 3 can be used to select the following formats.

Option 1 - 16 horizontal lines with 32 characters per line.

Option 2 - 18 horizontal lines with 40 characters per line.

Option 1 - 16 horizontal lines with 64 characters per line.

If you do not want to change the present format, press the Return key without entering any number.

If a configuration not available on the menu is desired, select option 0 followed by a Return. When the prompt "CRT* appears you must make exactly 17 entries from the CRT Constants Table (TABLE 7.2). Non-hexadecimal characters are ignored. After each set of two digits is entered, only the ESC, RUB, or COMMA keys are accepted.

The following example illustrates the keystrokes required to display messages in a format consisting of 16 horizontal lines with 40 character per line.

PiC Prompt — Your Response

#.....F, Return

CRT CONFIGURED 32 X 16

CONFIGURE CRT -
CHOOSE ONE OF THE FOLLOWING:

0: USER DEFINED CONSTANTS
1: 32 X 16
2: 40 X 18
3: 64 X 16

CARRIAGE RETURN: ACCEPT CURRENT FORMAT

ENTER NUMBER:.....0, Return

CRT*.....$31,$28,$2B,$42,$10,$07,
$10,$10,$00,$0E,$00,$0E,
$00,$00,$00,$00,$55,ESC

CRT CONFIGURED 40 X 16

#

7.3.7 HELP (H Key) Command

This command lists the Message Formatter commands. Press H followed by a Return to display this list on your screen or printer.

I:	INSERT
D:	DELETE
E:	EDIT
R:	RENUMBER
P:	PRINT (*display*)
F:	FORMAT CRT
CONTROL P:	TOGGLES PRINTER ON/OFF
CONTROL X:	ENABLES HEXADECIMAL DATA ENTRY

7.3.8 RUB/DEL Command

The RUB/DEL (backspace and delete) command allows you to delete unwanted message or command characters. It is especially useful for correcting errors made while typing in messages.

12.576 MHz Crystal (same as supplied with standard G&L Video Interface Modules)

32 Characters per line 8 horizontal lines

$27,	$20,	$22,	$42,	$08,	$01,	$08,	$08,	$00,	$1C,	$00,	$1C,	$00,	$00,	$00,	$00,	$D3

32 Characters per line 10 horizontal lines

$27,	$20,	$22,	$02,	$0A,	$0A,	$0A,	$0A,	$00,	$1B,	$20,	$0E,	$00,	$00,	$00,	$00,	$D3

40 Characters per line 16 horizontal lines

$31,	$28,	$2B,	$42,	$10,	$07,	$10,	$10,	$00,	$0E,	$00,	$0E,	$00,	$00,	$00,	$00,	$55

40 Characters per line 20 horizontal lines

$31,	$28,	$2B,	$42,	$14,	$0A,	$14,	$14,	$00,	$0B,	$00,	$0A,	$00,	$00,	$00,	$00,	$55

80 Characters per line 24 horizontal lines

$63,	$50,	$55,	$45,	$19,	$02,	$18,	$18,	$00,	$09,	$00,	$09,	$00,	$00,	$00,	$00,	$1D

6.288 MHz Crystal

16 Characters per line 8 horizontal lines

$13,	$10,	$12,	$41,	$08,	$01,	$08,	$08,	$00,	$1C,	$00,	$1C,	$00,	$00,	$00,	$00,	$D3

32 Characters per line 16 horizontal lines

$27,	$20,	$22,	$42,	$10,	$07,	$10,	$10,	$00,	$0E,	$00,	$0E,	$00,	$00,	$00,	$00,	$13

16.000 MHz Crystal

80 Characters per line 20 horizontal lines

$65,	$50,	$55,	$48,	$14,	$09,	$14,	$14,	$00,	$0B,	$00,	$0B	$00,	$00,	$00,	$00,	$1B

90 Characters per line 24 horizontal lines

$70,	$5A,	$62,	$49,	$19,	$02,	$18,	$18,	$00,	$09,	$00,	$09,	$00,	$00,	$00,	$00,	$1C

116 Characters per line 25 horizontal lines

$90,	$74,	$7C,	$4B,	$1C,	$02,	$19,	$19,	$00,	$08,	$00,	$08,	$00,	$00,	$00,	$00,	$1E

TABLE 7-2 CRT CONSTANTS

On Lear Siegler and similar terminals, hold the Shift key and press RUB to delete the last character on the screen that your typed in. On Televideo and similar terminals, use the DEL key.

7.3.9 ESCAPE (ESC Key) Command

Pressing the ESC Key terminates an INSERT or EDIT command and enters the new message into memory. The ESC Key is also used to return to the command level when the user is being prompted for a message number. (If the ESC character (Hex $1B) must be included in a message, the Hexadecimal Data Entry Mode must be used.)

7.3.10 PRINTER ON/OFF

To enable a printer, hold down the CTRL key and press the P key. If the printer is already enabled, entering the same CTRL/P command will disable the printer.

When the printer is enabled it will "echo" any keyboard entries. Also, a form feed will be issued each time the printer is enabled.

7.3.11 Hexadecimal Messages (CTRL X) Command

Hold down the CTRL (control) and press the X Key to enter the Hexadecimal Data Entry Mode. This command is used only in the INSERT or EDIT modes.

7.4 HEXADECIMAL DATA ENTRY

Hexadecimal data may be entered directly as a message while in the INSERT or EDIT modes. This mode of entry allows the user to incorporate non-standard ASCII and control characters into a message. This is accomplished by responding to the INSERT or EDIT prompts * with a "Control X" (hold down the CTRL key and press the X key) before entering your message characters (or data).

Message Data must than be entered in two-digit hexadecimal form with a comma separating each item. There will be a special dollar sign ($) prompt to indicate hex entry. The message will be displayed on the screen in hex form when the ESC key is pressed.

The following example will demonstrate how to insert a hexadecimal message. The message identification number will be 20 and the message itself will be the hexadecimal data $1B, $38.

PiC Prompt	Your Response
#	I20, Return
20*	(CTRL,X) $1B,$38,ESC
20 $1B, $38	
#	

IMPORTANT

Do not use the HEX character $FF in a hexadecimal message.

7.5 ERROR MESSAGES

The error messages listed in Table 7-3 will appear if an incorrect entry is made or if there is insufficient memory.

NOTE

A MESSAGE OVERFLOW occurs when the number of characters entered in the INSERT or EDIT modes exceed 254 (including Returns). If an OUT OF MEMORY error occurs in the INSERT or EDIT modes, the message will not be created. Other provisions must be made if more message storage is desired, such as deletion of unimportant messages, combining several messages into one, or adding more memory.

7.6 MEMORY CONSERVATION

Use of the lowest message numbers is encouraged. Using the highest message number (255) will result in the allocation of 510 bytes of additional memory, as compared to an allocation of only 2 bytes of additional memory for the lowest message number (1). This is in addition to the memory required for the messages and other program overhead. Actual memory usage may be computed by using the following formula:

M = (N*2) + (X) + (T) + 25

M = The total number of bytes allocated to the message file.

N = The highest message number used.
X = The actual number of messages created.
T = The number of message characters entered.

Error Message	When Used	Remedy
MESSAGE ALREADY EXISTS	INSERT, RENUMBER	Enter an unused message number
MESSAGE DOES NOT EXIST	DELETE, EDIT, RENUMBER, PRINT	Enter the number of an existing message
MESSAGE OVERFLOW	INSERT, EDIT	Limit message to 254 characters or less
OUT OF MEMORY	INSERT, EDIT	Add more memory, use lowest message numbers, clear unnecessary data
REENTER NUMBER OR ESC	INSERT, DELETE, EDIT, PRINT, RENUMBER	Enter correct number or the ESC key to quit
NUMBER OUT OF RANGE	INSERT, DELETE, EDIT, PRINT, RENUMBER	Use a message number from 1 to 255
INVALID ENTRY	INSERT, DELETE, EDIT, PRINT, RENUMBER	Enter valid characters (or hex data if applicable)

TABLE 7-3 ERROR MESSAGES

SECTION 8 - EPROM PROGRAMMER

8.1 GENERAL

The EPROM programming hardware and software allows the user to transfer all "RUNTIME" memory (compiled ladders, formatted messages, Data Storage memory and Call Routines stored in user memory) to EPROM chips. The EPROM's may then be installed on the 64K EPROM Module or the PiC Support Module.

8.2 EPROM DEVICES

EPROM (Erasable Programmable Read Only Memories) are integrated circuit memory devices that store information in non-volatile form. Electrical power does not have to be maintained in the EPROM's for stored data to be retained. EPROM's may be erased by exposure to high-intensity ultraviolet light. After erasure, EPROM's may be reprogrammed with new data.

EPROM erasing equipment, usually consisting of an ultraviolet light source, housing and timer, is available from a number of manufacturers.

The EPROM chips recommended for use with the PiC are as follows:

For PiC Support Module - Type 2764 and type 27128. Each 2764 EPROM stores up to 8,192 (8K) bytes of information. Each 27128 EPROM stores up to 16,384 (16K) bytes of information.

For EPROM (Multi-Memory) Module - Type 2764. Each 2764 EPROM stores up to 8,192 (8K) bytes of information.

8.3 PROGRAMMING HARDWARE

The following hardware is required to program EPROM's:

Controller
1 PiC409 or PiC49 Programmable industrial Computer.

Programming Terminal
1 Lear Siegler ADM3A or ...
Televideo 910 Plus or ...
IBM PC or compatible personal computer with GLLADD Software and serial communications port.

Interface Hardware
1 RS-232C Module Addressed at #2236.
1 RS-232C Faceplate.
1 RS-232C to GTEK Interface Cable.

EPROM Programmer
1 GTEK Corp. EPROM Programmer, Model 7128

EPROM Devices
One to five 2764 (8K by 8) EPROM chips or ...
One 27128 (16K by 8) EPROM chips (for PiC Support Module)

8.4 OPERATION

Perform this procedure to start-up the EPROM programming software:

1. Enter selection 6 (AUX 2) from the AUX 1 Menu and press the Return key or ...

   Set the Mode Select Switch on the PiC409 Control Panel to the AUX 2 position, wait for STATUS Light 1 to flash and press the INITIALIZE Button.

2. The PiC will display the following menu:

```
CHOOSE ONE:

1: MESSAGE FORMATTER
2: GTEK SUPPORT
3: CALL ROUTINE INSTALLER
4: BANK SELECT
5: VARIABLE AND C. R. BACKUP
6: DIAGNOSTICS

CHOICE?
```

Enter "2" and press the Return key.

3. The PiC will display the following message:

```
GIDDINGS & LEWIS PIC409
GTEK SUPPORT (C) 1985 VERSION X.X

APPLY POWER TO THE GTEK
CONNECT CABLE FROM RS-232 CARD TO
GTEK
SELECT 1200 BAUD RATE
PRESS SPACE BAR TO BEGIN
```

Set up the equipment as described in the screen message. Lower the lever on the EPROM socket on the GTEK and insert an unused or erased EPROM into the socket. Be sure the notch of the EPROM is at the top of the socket. Raise the lever to grip the EPROM firmly.

Press the Space Bar on the keyboard.

4. At this point the PiC will be in a "transparent" mode. The PiC will be acting as a link between the terminal or computer and the GTEK device. If the GTEK prompt "2732" does not appear, enter one or more additional space characters to produce the prompt.

5. When the prompt appears, the user must indicate the type of EPROM device to be programmed. Enter "M" and a Return to display a menu similar to TABLE 8-1. Enter an "E" to select type 2764 (8K by 8) or an "F" to select type 27128 (16K by 8). The GTEK will respond with the device type on the screen.

NMOS	CMOS	W/ADAPT
A. 2758	L. 27C16	R. 8748
B. 2716	M. 27C32	S. 8749
C. 2732	N. MC6716	T. 8741
D. 2732A	O. 27C64	U. 8742
*E. 2764		V. 8751
**F. 27128		W. 8755
G. 2508	**EPROM**	
H. 2516	P. 5213	
I. 2532	Q. X2816A	
J. 2564	X. 48106	
K. 68766		

* For PiC Support and EPROM Modules
** For PiC Support Module

TABLE 8-1 GTEK EPROM SELECTION

6. Enter "V" and a Return to test the EPROM to verify that it is erased. If it is erased, the GTEK will respond with the EPROM type (2764 or 27128).

If it is not erased, the unerased memory locations will be displayed. To stop the display, enter a dollar sign ($). Remove the EPROM and erase it, or replace it with new or erased EPROM.

7. Hold down the "CTRL" key and press the "D" key. The PiC will leave the transparent mode and display the following message:

```
CHOOSE FROM SIZE:

1: 2K X 8
2: 4K X 8
3: 8K X 8
4: 16K X 8

CHOICE?
```

Enter a "3" and a Return to select 8K by 8 EPROM's. Enter a "4" and a Return to select 16K by 8 EPROM's.

NOTE

When using 2764 (8K by 8) EPROM's with the PiC Support Module, remove Jumper RS2 and insert Jumper RS3.

When using a 27128 (16K by 8) EPROM with the PiC Support Module, remove both Jumper RS2 and Jumper RS3.

8. The Following message will appear on the screen:

```
"ENTER "L" FOR LDN AND MESSAGES
OR "A" FOR ALL USER MEMORY"
```

Entering an "L" followed by a Return copies the user memory designated for your LDN, Call Routines and messages onto the EPROM chips.

Entering an "A" followed by a Return will save all of the user memory in the PiC, including Data Storage memory, on the EPROM chips. If you select "A", the following message will appear on the screen:

```
TOTAL USER MEMORY 40960 BYTES
NUMBER OF (EPROM size) EPROMS
NEEDED = "X"
```

The EPROM size indicated is the size you chose earlier. The number of EPROM's needed ("X") is the total number of EPROM chips required for 40K bytes (40960 bytes) of user memory.

NOTE

Because the GTEK Support Function does not know the exact amount of memory you will wish to save, a table indicating the starting memory location of each EPROM chip will appear on the screen. The number of chips that you actually need is equal to the first EPROM number with an ending memory location greater than or equal to the amount of user memory you wish to save.

For example: If you need to save 20K bytes of memory on 8K X 8 EPROM chips, the *first* chip number with an ending address that equals or exceeds 20K bytes is EPROM #2. As indicated on the table, EPROM #2 has a starting memory location of 16K (user memory begins at 8K) and an ending location of 24,575 bytes. The next EPROM, which starts at 24K is not needed.

---

9. The PiC will then display this message followed by a series of questions to prompt you through the EPROM programming procedure.

   "PLEASE RESPOND Y, N, OR ESC."

   The first question is "PROGRAM EPROM 1?".

   To answer YES, press the "Y" key followed by a Return. When the prompt "READY" appears, check the blank EPROM to be sure it is properly seated in the socket and press the "Y" key to begin the programming.

NOTE

If you answer NO ("N" key followed by a Return), after the question "PROGRAM EPROM 1?", The PiC will respond with "PROGRAM EPROM 2?". If you press the Escape (ESC) key, the GTEK will return to the prompt "2764" or "27128."

   The PiC will respond with "PROGRAMMING EPROM" followed by the number and memory position of the EPROM. A Period (.) will be displayed every time 256 bytes are programmed on the EPROM (approximately every 12 seconds).

   When the programming is completed, the message "VERIFYING" will appear on the screen, indicating that the PiC is checking the data on the EPROM against the data in the PiC. Approximately five seconds per 256 bytes are required for verification.

10. When the verification for the first EPROM is complete, the PiC will display the message "PROGRAM EPROM 2?".

    If another EPROM is to be programmed, press the "Y" key followed by a Return and repeat the programming procedure described for EPROM 1.

    Program each EPROM in the same manner. When all of the EPROM's are programmed and verified, press the Escape (ESC) key. The device type prompt will appear and you may now enter other GTEK commands or switch to another PiC mode.

8.5 ERROR HANDLING

To ensure the validity of programmed data contained on the EPROM, all data sent to the GTEK is verified by a special "VERIFYING..." cycle. All error detection is carried out by the GTEK device.

If an error is encountered during a programming or verification cycle, the GTEK will send an error code preceded by an asterisk (*). Refer to the GTEK User's Manual for a description of these error codes. Normally, starting over again with a freshly erased EPROM will avoid the occurrence of any additional errors.

SECTION 9 - CALL ROUTINE INSTALLER

9.1 GENERAL

The Call Routine Installer in the AUX 2 Mode allows the user to choose the Call Routines needed for a specific application from the PiC409 Call Routine Library. By placing only the needed routines in user memory, memory is conserved and cost is reduced. Call Routines may be changed at any time by repeating the installation process.

The procedure consists of two steps:

1. The desired Call Routines must be stored in the PiC by using one of the following methods:
   a. Loading Call Routines from tape cassette or cartridge into user memory.
   b. Loading Call Routines from floppy disk into user memory.
   c. Copying Call Routines from EPROM into user memory.
   d. Keeping a Standard Call Routine EPROM board in the Master Rack.
2. The Call Routines must be "installed". This step builds up the necessary tables that allow the user LDN to access the Call Routines.

NOTE

The Real Time Debug Call Routine is located in memory on the Compiler Module. This Call Routine is unique because it cannot be copied into user memory. As a result, the Compiler Module must be kept in the Master Rack if Real Time Debug is to be used. Install Real Time Debug (Library Number C912) using the procedures in Section 9.6 "INSTALLING CALL ROUTINES."

When loading or copying Call Routines into user memory, 48 bytes plus the total number of bytes used by the selected Call Routines must be allocated. See Section 3.11 in the PiC409 Programming Manual for information pertinent to the ALLOCATE command.

9.2 LOADING CALL ROUTINES FROM TAPE

1. Connect the tape loader to the loader socket on the PiC control panel. See Appendix C in the PiC409 User's Manual.
2. Turn the tape loader on - Insert the PiC409 Standard Call Routine tape and rewind it.
3. Enter the PROGRAM Mode and allocate sufficient user memory for the Call Routines. Refer to the Call Routine Manual Table of Contents for memory requirements.
4. Enter the AUX 2 mode. The PiC will display the following menu:

```
CHOOSE ONE:

    1: MESSAGE FORMATTER
    2: GTEK SUPPORT
    3: CALL ROUTINE INSTALLER
    4: BANK SELECT
    5: VARIABLE AND C. R. BACKUP
    6: DIAGNOSTICS

CHOICE?
```

5. Enter "3 (Return)".
6. The PiC will display the following message:

```
GIDDINGS AND LEWIS PIC409 CALL
ROUTINE INSTALLER (C) 1983 VERSION
X.X
```

7. Start the Load process by entering "L".
8. The PiC will display:
   "LOAD CALL BINARYS (Y or N)".
9. Enter "Y" (Return)".
10. The tape loader will read the tape and load the first Call Routine into a buffer memory (located below the start of user memory).

IMPORTANT

This process destroys any non-volatile variables. If you need to retain this data, back it up on tape.

If the PiC encounters an incorrect condition, such as an unreadable tape or insufficient memory, an error message will be displayed. See Section 9.10 for error message explanations.

11. After each successful load operation, the PiC will display "COPY LIBRARY NUMBER _____ (Y or N)". The first Call Routine number (in alphanumeric order) from the tape will be shown in the blank area. The user has the choice of entering "Y (Return)", "N (Return)" or "ESC". Enter "Y" to copy the Call Routine from buffer memory to user memory. Enter "N" to skip the routine. Enter "ESC" to exit the Load Mode.

NOTE

If insufficient user memory was allocated before loading the Call Routines, the following error message will be displayed:

_____ BYTES ALLOCATED _____ REQUIRED.

Enter the PROGRAM Mode and allocate the additional memory required. Reenter the Call Routine Installer in the AUX. 2 Mode and enter "/L" (SLASH key, L key) in response to the asterisk (*) prompt. This allows the user to continue loading Call Routines without rewinding the tapes and starting over.

---

12. After entering "Y (Return)" or "N (Return)", the PiC will load the next Call Routine and display "COPY LIBRARY NUMBER _____ ('Y or N')" with the Call Routine number shown in the blank area. Enter "Y", "N", or "ESC" as indicated in step 11.

NOTE

If you forget to load a Call Routine or want to load a non-standard Call Routine from a separate tape, the loading operation may repeated at any time.

---

13. When all of the desired Call Routines are loaded, exit the LOAD Mode with the "ESC" key. The PiC will display "MINIMUM ALLOCATION = _____ followed by the number of memory bytes required to store the selected Call Routines. This number may be written down and used with the ALLOCATE command to eliminate any wasted memory space that exists between the Calls and the user's LDN. The Call Routines are now ready to be installed as described in Section 9.6.

9.3 LOADING CALL ROUTINES FROM FLOPPY DISK

The G&L Library of Standard Call Routines is available on floppy disk for use with an IBM PC or compatible personal computer and the G&L GLLADD software. If you are using GLLADD version 1.4, follow the instructions provided on the computer screen. If you are using GLLADD version 2.0 or higher, use the following instructions:

1. Using the GLLADD interface cable, connect the serial port of the personal computer to the Terminal Port on the PiC Control Panel.
2. Enter the PiC409 Aux 1 Support Mode from the GLLADD Main Menu.
3. When the AUX 1 menu appears on the screen, press the 8 key to redirect data through the Terminal Port. Call Routines cannot be transferred using this method unless data is re-directed to the Terminal port.
4. Enter the AUX 2 Mode by selecting option 6 from the AUX 1 Menu. When the AUX 2 Menu appears on the screen, remove the GLLADD disk from the system drive (if you are using a dual floppy system, this would be drive A) and replace it with your Call Routine Disk.
5. Choose selection 3 (Call Routine Installer) from the AUX 2 Menu. When the asterisk (*) prompt appears, press the L key to load the first Call Routine.
6. When the computer asks for a file name, enter the name of the Call Routine (for example: "A110" or "D120") followed by a Return.
7. Repeat this process until you have loaded all of the Call Routines needed for your LDN. Press the ESC key to return to the * prompt. Replace the Call Routine Disk in the system drive with your GLLADD disk .

The Call Routines are now ready to be installed as described in Section 9.6

NOTE

If insufficient user memory was allocated before loading the Call Routines, the following error message will be displayed:

_____ BYTES ALLOCATED _____ REQUIRED.

Enter the PROGRAM Mode and allocate the additional memory required. Reenter the Call Routine Installer in the AUX. 2 Mode and enter "/L" (SLASH key, L key) in response to the asterisk prompt: *. This allows the user to continue loading Call Routines without starting over.

9.4 CALL ROUTINES STORED IN EPROM

If the Standard Call Routine EPROM Module is to be kept in the Master Rack, the Call Routines do not have to be copied into user memory. The memory allocation can be set to "0" and the Call Routines can be installed as described in Section 9.6. If the module is to be removed however, memory must be allocated and the Call Routines copied into user memory as described in Section 9.5.

9.5 COPYING CALL ROUTINES FROM EPROM

1. Turn off the power to the PiC and insert the PiC409 Standard Call Routine EPROM Module into the Master Rack.
2. Turn the power back on.
3. Enter the PROGRAM Mode and allocate sufficient user memory for the Call Routines. Refer to the Call Routine Manual Table of Contents for memory requirements.
4. Enter the AUX 2 Mode. When the AUX 2 menu appears on the screen, select option 3 (Call Routine Installer) followed by a Return. The PiC will display the following message:

GIDDINGS AND LEWIS PIC409 CALL ROUTINE INSTALLER (C) 1983 VERSION X.X

5. Start the Copy process by entering "C".
6. The PiC will display "COPY (Y or N)".
7. Enter "Y" (Return)".
8. The prompt "CLEAR ALL CALL BINARYS FROM USER MEMORY (Y OR N)" will be displayed. Enter "N".
9. The prompt "LIBRARY NUMBER" will be displayed. Enter a Call Routine library number you wish copied into user memory.

NOTE

If insufficient user memory was allocated before copying the Call Routines, the following error message will be displayed:

___ BYTES ALLOCATED ___ REQUIRED.

Enter the PROGRAM Mode and allocate the additional memory required. Reenter the Call Routine Installer in the AUX 2 Mode. Enter "C", in response to the asterisk prompt: *, to continue copying Call Routines into user memory.

10. Repeat steps 5 through 9 until all the desired Call Routines are copied. The Call Routines are now ready to be installed as described in Section 9.6.

9.6 INSTALLING CALL ROUTINES

After Call Routines are stored in the PiC, they must be "Installed". Start the Install process by entering the Call Routine Installer and pressing the I (install) key followed by a Return. The PiC will display: INSTALL CALL 1 LIBRARY NUMBER? Enter the library number of a Call Routine. The PiC will display the accompanying version and group numbers; then it will prompt for the next call. Continue entering library numbers until none remain.

Before exiting the Install process, fill out the CALL ROUTINE WORKSHEET at the back of Section 9.

When filling out the worksheet, LIST THE CALL ROUTINES IN THE SAME ORDER THAT THEY WERE INSTALLED! This record is required in case the need arises to update or reinstall the Call Routines. (The Call Routines must be installed in the *same* sequence as the original procedure or the LDN will not be compatible with the Call Routines.) Enter "ESC" to exit the Install process.

9.7 REINSTALL

Additional standard or non-standard Call Routines may be added to user memory at any time. However, because calls have already been installed, the INSTALL command is locked out. To install additional calls, the REINSTALL command is used.

NOTE

The Install process may be re-enabled by initializing the Call Routine Installer with a "/INIT" command. However, this is not recommended since the user must reenter all of the Call Routines. If the user does not reenter the Calls in the same order as originally entered, the LDN will not be compatible with the Call Routines.

Before using the Reinstall process, be sure that the additional Call Routines are either in user memory or found on a Standard Call Routine EPROM Module in the Master Rack.

To use the Reinstall function press the R key. The PiC will respond with "REINSTALL" and a list of the Call Routines already installed. At the end of the list, enter the library numbers of the additional Call Routines. Entering a duplicate library number will result in an error message. Enter "ESC" to exit the Reinstall process.

9.8 UPDATING CALL ROUTINES IN USER MEMORY

Call Routines in user memory can be updated by replacing them with the newer versions. The newer versions of the Call Routines can be loaded from tape cassette, tape cartridge or floppy disk or copied from an EPROM module. To update existing Call Routines, follow this procedure:

1. Enter the Call Routine Installer from the AUX 2 mode.
2. Enter "C". The prompt "`COPY (Y OR N)`" will be displayed. Enter "Y" and a Return.
3. The prompt "`CLEAR ALL CALL BINARYS FROM USER MEMORY (Y or N)`" will be displayed. Enter "Y".
4. When the prompt "`LIBRARY NUMBER?`" is displayed, enter "ESC".
5. Load or copy the new versions of the Call Routines from tape, disk or EPROM. Use the "L" command when loading from tape or disk (see Section 9.2 and 9.3). To copy Call Routines from EPROM, use the "C" command (see Section 9.5).
6. Reinstall the Call Routines by means of the "R" command as instructed in Section 9.7.

9.9 PC400 to PIC409 UPGRADE

Perform the following procedure to convert a PC400 LDN to a PiC409 LDN. The PC400 Call Routine worksheet will have to be available to cross-reference the library numbers to the PC400 call designations.

1. Load the PC400 tape into the PiC409 by selecting the LOAD Mode from the AUX 1 menu or by rotating the Mode Selector Switch on the PiC Control Panel to the LOAD position and pressing the Initialize button.
2. After loading the tape, enter the PROGRAM Mode and initialize the LDN by entering "/INIT". When the PiC displays "`/INITIALIZE (Y or N)`", enter "Y(Return)". Enter "N(Return)" in response to "`CLEAR MEMORY Y-N`". Enter the desired response to the initialization questions.
3. Use the A command in the PROGRAM Mode to allocate sufficient memory space for the Call Routines.
4. Enter the AUX 2 Mode and select the Call Routine Installer. Initialize the Installer by entering "/INIT". The PiC will display the following message:

```
INITIALIZING THE CALL ROUTINE
INSTALLER AFTER INSTALLING AND
DEVELOPING AN LDN IS NOT
RECOMMENDED.  IF IT MUST BE DONE,
MAKE SURE A BACKUP TAPE OF THE LDN
EXISTS AND THAT THE INSTALLER
WORKSHEETS HAVE BEEN FILLED OUT.
ARE YOU SURE?  (Y or N)
```

   Enter "Y" followed by a Return.

5. Load the desired Call Routines from the PiC409 Standard Call Routine Library tape via the L (load) Command.
6. Install the Call Routines via the I (install) Command.
7. Upgrade the PC400 call linkage table by entering "U". The PiC will display "`UPGRADE PC400 CALL LINKAGE TABLE`" followed by "`CALL A LIBRARY NUMBER?`."

Enter the library number of the equivalent PiC409 Call Routine corresponding to the PC400 Call "A" used, followed by a Return. The PiC will display the same question with call "B" in place of "A". The process will continue through call "Z". If a call letter was not used in the PC400, enter only a Return in response to the question. After call "Z", the "*" symbol will appear as a prompt.

8. Record the new LDN. The conversion is complete.

9.10 ERROR MESSAGES

TABLE 9-1 shows error messages, the modes where these messages occur and a suggested cause of the problem.

Error Message	Mode	Remedy
ERROR 1 CALLS ALREADY INSTALLED. USE REINSTALL.	INSTALL Mode	Use R key instead of I key.
ERROR 2 THIS CALL ALREADY INSTALLED	INSTALL and REINSTALL Modes	No Further Action Required.
ERROR 4 CALL BINARY CHECKSUM ERROR	INSTALL, REINSTALL, COPY and LOAD Modes	Replace bad PiC Compiler Module.
ERROR 5 CALL BINARY NOT FOUND	INSTALL, REINSTALL and COPY Modes	Load Call Routine into User Memory.
ERROR 6 CALL IN THIS GROUP ALREADY INSTALLED	INSTALL and REINSTALL Modes	This Call is incompatible with a previously installed Call. Do not install this Call or clear existing Calls and replace them with compatible Calls.
ERROR 7 NOT ENOUGH ASSIGNABLE RAM	INSTALL and REINSTALL Modes	You have too many Call Routines loaded into User Memory. Clear Calls and load only the ones that you need for your LDN.
ERROR 8 FOREGROUND LINKAGE TABLE FULL	INSTALL and REINSTALL Modes	You have too many Call Routines that require foreground linkages. Use fewer Call Routines.
ERROR 9 TAPE 1/0 ERROR	LOAD Mode	This error indicates a bad Call Routine tape or disk. Use another copy of the Call Routines.
ERROR 10 NOT A VALID CALL TAPE	LOAD Mode	You are not using a Call Routine Tape. Insert a Call Routine tape and try again.
ERROR 11 CALL ALREADY IN USER MEMORY	LOAD or COPY Modes	No further action required.
ERROR 12 _____ BYTES ALLOCATED, _____ BYTES REQUIRED	LOAD or COPY Modes	Insufficient memory space was allocated for Call Routines. Go to the PROGRAM Mode and allocate more memory using the A (allocate) command. Return to the Call routine Installer and enter a "/ L" if you are loading from tape or disk or a "C" if you are copying from an EPROM Module.
ERROR 13 COPY TO USER MEMORY FAILED	LOAD or COPY Modes	Turn memory module write-protect switch off. If it is already off, replace memory module.
SINT ERR	Any Mode	Correct problem with serial communications interface.

TABLE 9-1 CALL ROUTINE INSTALLER ERROR MESSAGES

CALL ROUTINE WORKSHEET

Call Routine	Library Number	Version	Description	Memory Used (Bytes)
1				
2				
3				
4				
5				
6				
7				
8				
9				
10				
11				
12				
13				
14				
15				
16				
17				
18				
19				
20				
21				
22				
23				
24				
25				
26				
27				
28				
29				
30				
31				
32				
33				
34				
35				
36				
37				
38				
39				
40				

SECTION 10 - BANK SELECT

10.1 GENERAL

The Bank Select feature is available in the AUX 2 mode. Bank Select allows a bank to be selected in order to load an LDN into the bank, or an existing LDN in a bank can be entered in order to edit it.

10.1.1 Background Information

The CPU of the PiC provides a maximum of 40K memory for the storage of data, Call Routines and LDN's. In some applications, a lengthy LDN requires more user memory . The Multimemory and CMOS memory modules include a memory bank select feature that allows the user to expand memory capacity by placing up to eight memory modules in the same address location. Module-mounted dipswitches are used to place a modules into a particular bank. The modules are selectively enabled or disabled through software.

10.2 USING BANK SELECT

1. Access the AUX 2 Menu. This can be done either from the AUX 1 Main Menu or by setting the mode switch on the control panel to AUX 2 and pressing the INITIALIZE Button. The following menu is displayed:

```
AUX 2 MENU

1 - MESSAGE FORMATTER
2 - GTEK SUPPORT
3 - CALL ROUTINE INSTALLER
4 - BANK SELECT
5 - VARIABLE, CR, OR I/O TABLE BACK-UP
6 - DIAGNOSTICS

SELECT (1-6)
```

2. Type a "4" and press the RETURN key. The following information will appear:

```
ENTER THE NUMBER, FROM 1-8, OF THE BANK
YOU WANT TO ACTIVATE.
```

3. Type in the number of the bank you wish to access and press the RETURN key. The following information will appear:

```
BANK X IS NOW ACTIVE.  SELECT NEW MODE.
```

"X" designates the bank number selected. When a new mode is selected, the designated bank is active. That bank will remain active until another bank is selected or until the RUN Mode is entered. The RUN Mode defaults to Bank 1.

When you leave the RUN Mode you will be in whatever bank was currently active, as determined by how bank selection is set up in the LDN.

SECTION 11 - SELECTIVE BACKUP

11.1 GENERAL

The Selective Backup feature is available in the AUX 2 mode. The Selective Backup feature allows retentive control relays, non-volatile variables, and/or the I/O Module Address Table to be backed up onto tape or disk. When an LDN is recorded onto tape or disk the status of retentive control relays and the contents of non-volatile variables are not recorded. Their existence is recorded, but not the specific status and contents. In order to obtain a permanent record of this data, it must be backed up using the Selective Backup feature.

The Selective Backup feature is useful when an identical LDN is used in a number of PiCs. The LDN can be loaded into each PiC, and the retentive control relays and non-volatile variables can then be loaded in as data. Another instance in which Selective Backup is useful pertains to LDN modification. When a new Call Routine is loaded into user memory, the area of memory that contains retentive control relay status, non-volatile variable contents and the I/O Module Address Table is written into. This destroys the data that is stored there. Backing up that data beforehand allows it to be easily replaced.

NOTE

The following procedure was written based on the use of GLLADD software. Slight differences in wording will be found if the procedure is carried out using AUX 2 and a dumb terminal. The basic procedure is the same and the prompts will still walk the user through the procedure.

11.2 BACKUP PROCEDURE

1. Access the AUX 2 Menu. This can be done from the AUX 1 Main Menu or by setting the mode switch on the control panel to AUX 2 and pressing the INITIALIZE Button. The following menu will be displayed:

```
AUX 2 MENU

1 - MESSAGE FORMATTER
2 - GTEK SUPPORT
3 - CALL ROUTINE INSTALLER
4 - BANK SELECT
5 - VARIABLE, CR, OR I/O TABLE BACK-UP
6 - DIAGNOSTICS

SELECT (1-6)
```

2. Type a "5" and press the RETURN key. The following will be displayed:

```
VARIABLE, CR OR I\O TABLE BACKUP MENU

1 - NON-VOLATILE VARIABLE BACKUP
2 - NON-VOLATILE CR BACKUP
3 - I\O MODULE ADDRESS DETECT TABLE
    BACKUP

TO LOAD NON-VOLATILE VARIABLES, CR'S OR
THE I\O MODULE TABLE USE THE LOAD MODE
OF AUX1 OR THE ROTARY MODE SWITCH

SELECT (1-3)
```

3. Type in the number of the backup you wish to perform and press the RETURN key. The following will be displayed:

```
Enter the filename (<F9> for help,
<Alt><F10> to abort):
```

4. Type in the name you want to store the data under and press the RETURN key. The following will be displayed:

```
Please indicate whether this is a
Ladder, or Data file (L/D)?
```

5. Type in a "D". The following will be displayed:

```
VARIABLES RECORDED, AUTO VERIFY IN
PROGRESS
Enter the filename (<F9> for help,
<Alt><F10> to abort):
```

6. Type in the filename and press RETURN. The following will be displayed:

```
Please indicate whether this is a
Ladder, Call, or Data file (L,C,D)?
```

7. Type in a "D". The following will be displayed:

```
GOOD

CHANGE MODES TO EXIT.
ENTER ANY KEY TO START THIS MODE OVER.
```

11.3 LOADING BACKED UP DATA

Normal load procedures are followed to load the stored information into the PiC. These procedures are covered in Section 7 of the GLLADD Manual for loading from disk, and in Section 4 of the PiC409 Family Programmer's Manual for loading from tape.

SECTION 12 - DIAGNOSTICS

12.1 GENERAL

The PiC Diagnostics allow the user to verify the conditions of user memory, control relay memory, system modules, and whether or not the I/O modules can be found at the addresses they are intended to be at. The procedures use easy to follow menus and prompts to guide the user.

The PiC Diagnostics are a valuable troubleshooting tool. They are especially helpful in locating intermittent problems, since the Diagnostics can be started and allowed to run continuously. When the intermittent failure occurs, the PiC Diagnostics can assist in identifying the source of the problem. The PiC Diagnostics features are available from the AUX 2 Menu.

NOTE

PiCs that do not contain the updated Compiler Module do not offer the I/O Module Address Detect Test. For more information on the Compiler Module update, see Section 12.5.

12.1.1 System Requirements

A dumb terminal or computer must be connected to the PiC in order to perform the PiC Diagnostics. Each PiC that contains I/O modules that are going to undergo the I/O Module Address Detect Test must contain a Resistor Termination Module while the test is carried out. Immediately after the test, the Resistor Termination Module should be removed.

12.1.2 Accessing the Diagnostics Menu

1. Access the AUX 2 Menu. This can be done from the AUX 1 Main Menu or by setting the mode switch on the control panel to AUX 2 and pressing the INITIALIZE Button. The following menu will be displayed:

```
AUX 2 MENU

1 - MESSAGE FORMATTER
2 - GTEK SUPPORT
3 - CALL ROUTINE INSTALLER
4 - BANK SELECT
5 - VARIABLE, CR, OR I/O TABLE BACK-UP
6 - DIAGNOSTICS

SELECT (1-6)
```

2. Type in a "6" and press RETURN. The following will be displayed:

```
DIAGNOSTIC MENU

1 - USER MEMORY DIAGNOSTIC
2 - CONTROL RELAY MEMORY DIAGNOSTIC
3 - EXECUTE POWER ON DIAGNOSTICS
4 - EXECUTE I/O MODULE ADDRESS DETECT

SELECT (1-4)
```

At this point, refer to the part of this Section that covers the diagnostics procedure you wish to follow.

12.2 USER MEMORY DIAGNOSTIC

The User Memory Diagnostic checks the condition of user memory by writing to that area of memory and then reading it to determine if data is being recorded accurately. The following procedure explains how to carry out the User Memory Diagnostic.

1. With the Diagnostic Menu displayed, type in a "1" and press RETURN. The following will be displayed:

```
WARNING!!! DO NOT EXECUTE THE USER
MEMORY DIAGNOSTIC UNLESS THE LADDER IS
SAVED
IF THE TEST IS STOPPED BY A POWER LOSS
OR A MODE SWITCH MODE CHANGE, INVALID
MEMORY WILL RESULT
ENTER THE NUMBER OF THE HIGHEST BANK TO
TEST  FOR EXAMPLE, IF YOU ENTER A 4,
THE TEST IS DONE ON BANKS 1, 2, 3, AND
4
```

2. After making certain that the LDN is saved in some form, type in the number of the highest bank to be tested and press RETURN. The amount of memory in each bank to be tested will be displayed. The following information will also be displayed.

```
IF THE AMOUNT OF MEMORY IN EACH BANK IS
NOT CORRECT POWER DOWN AND ADJUST THE
ADDRESSING ACCORDINGLY

IF THE AMOUNT OF MEMORY IN EACH BANK IS
CORRECT, ENTER A CARRIAGE RETURN TO
INITIATE THE TEST
```

3. Press RETURN to start the User Memory Diagnostic. The results of the diagnostic test will be displayed in relation to each bank tested.

   Example display for a user memory bank that passed diagnostics:

```
BANK 1 OK
```

   Example display for a user memory bank that failed diagnostics:

```
MEMORY FAILURE AT $XXXX
```

   "XXXX" is a hexadecimal address (the $ indicates that it is in hex) indicating the location of the memory failure. The memory module containing that address location should be replaced and the test run again to make certain no other faulty memory is in the system.

4. Press CTRL-Q to stop the User Memory Diagnostic test and return to the AUX 1 Menu.

12.3 CONTROL RELAY MEMORY DIAGNOSTIC

The Control Relay Memory Diagnostic checks the condition of control relay memory by writing to a user-specified area of control relay memory and then reading it to determine if data is being recorded accurately. The following procedure explains how to carry out the Control Relay Memory Diagnostic.

1. With the Diagnostic Menu displayed, type in a "2" and press RETURN. The following will be displayed:

```
CONTROL RELAY DIAGNOSTIC MENU

1 - CR0 TO CR1999
2 - CR6000 TO CR9255
3 - CR3000 TO CR5255
4 - CR3000 TO CR9255
5 - CR0 TO CR9255

SELECT (1-5)
```

2. Type in the number (1-5) indicating the control relay group to be tested and press RETURN.

Options 2-5 refer to control relay possibilities gained by designating extension rack I/O addresses as control relays. This technique is covered in Section 5 of the PiC409 Family User's Manual. The groups of control relays displayed in the Control Relay Diagnostic Menu correspond to the following I/O address designations:

```
CR0 TO CR1999
```

The standard 2000 control relays.

```
CR6000 TO CR9255
```

The I/O addresses of the last four extension racks have been designated as control relays. The following control relays are actually being tested: 6000-6255, 7000-7255, 8000-8255, and 9000-9255.

```
CR3000 TO CR5255
```

The I/O addresses of the first three extension racks have been designated as control relays. The following control relays are actually being tested: 3000-3255, 4000-4255, and 5000-5255.

```
CR3000 TO CR9255
```

The I/O addresses of all seven extension racks have been designated as control relays. The following control relays are actually being tested: 3000-3255, 4000-4255, 5000-5255, 6000-6255, 7000-7255, 8000-8255, and 9000-9255.

```
CR0 TO CR9255
```

This choice tests the standard 2000 control relays and the control relays gained when the I/O addresses of all seven extension racks have been designated as control relays. The following control relays are actually being tested: 0-1999, 3000-3255, 4000-4255, 5000-5255, 6000-6255, 7000-7255, 8000-8255, and 9000-9255.

3. The selected Control Relay Memory Diagnostic will be performed. The results of the diagnostic test will be displayed in relation to the control relay group tested.

   Example display for a control relay memory group that passed diagnostics:

```
SINGLE BIT MEMORY OK IN GROUP 1
```

   Example display for a user memory bank that failed diagnostics:

```
SINGLE BIT MEMORY FAILURE AT $XXXX
```

   "XXXX" is a hexadecimal address (the $ indicates that it is in hex) indicating the location of the control relay memory failure. The memory module containing that address location should be replaced and the test run again to make certain no other faulty control relay memory is in the system.

4. Press CTRL-Q to stop the Control Relay Memory Diagnostic test and return to the AUX 1 Menu.

12.4 EXECUTING POWER ON DIAGNOSTICS

The Power On Diagnostics check the condition of the modules required for system operation. The main advantage of the Power On Diagnostics over the normal PiC start-up diagnostics is that these diagnostics are run continuously, providing a means of verifying an intermittent problem. The following procedure explains how to carry out the Power On Diagnostics.

1. With the Diagnostic Menu displayed, type in a "3" and press RETURN. The following will be displayed:

```
POWER ON DIAGNOSTICS

ENTER CR TO START, ESC TO STOP
```

   The CR in this prompt refers to a carriage RETURN. If ESC is pressed to stop the test, you must then press CTRL-Q to return to the AUX 1 Menu. A step can be saved by simply pressing CTRL-Q initially, which both stops the test and displays the AUX 1 menu.

2. Press RETURN. The Power On Diagnostics will be continuously performed and the results of the diagnostic test will be displayed.

   Example display for a Power On Diagnostics Test that found no errors:

```
NO ERRORS FOUND IN POWER UP DIAGNOSTICS
ESC TO EXIT THE TEST
```

   If an error is found during the Power On Diagnostics, the status indicator LEDs on the PiC control panel will indicate which module is faulty. Refer to Section 6 - Troubleshooting in the PiC409 Family User's Manual for a guide to what the status indicator LEDs indicate when a fault occurs.

   If ESC is pressed to stop the test, you must then press CTRL-Q to return to the AUX 1 Menu. A step can be saved by pressing CTRL-Q initially, which both stops the test and displays the AUX 1 menu. There is a slight delay between when CTRL-Q is pressed and the AUX 1 Menu is displayed.

12.5 THE I/O MODULE ADDRESS DETECT TEST

12.5.1 General

The I/O Module Address Test is an easy to follow, menu-driven diagnostic procedure. The Address Test allows the user to verify that I/O modules are in the PiC at their intended memory address locations. The procedure consists of the following steps:

1. When first performing the test, the user initializes the I/O Module Table and then types in a list of the I/O modules that are

present in the PiC and the address for each I/O Module.

2. When the I/O module address information has been entered into the table, the user commands the PiC to do an I/O Module Address Test.

   The PiC then attempts to locate each I/O module at the address the user entered for it. If an I/O module cannot be found at the address entered for it, the PiC indicates this.

12.5.1.1 Background Information

In order to use the I/O Module Address Detect Test, the PiC must either contain the updated Compiler Module that was released for production in mid-1987 or have the updated EPROMs installed on the Compiler Module residing in the PiC. If one of these conditions is not met, the I/O Module Address Detect Test will not be an option in the Diagnostics Menu.

An updated Compiler Module will contain EPROMs with the following part numbers:

Socket 1 - 502-03223-00
88168-03

Socket 2 - 502-03224-00
88169-04

Socket 3 - 502-03225-00
88170-03

Socket 4 - 502-03226-00
88171-04

Socket 5 - 502-52051-00
88284-01

Socket 6 - 502-52052-00
88285-02

12.5.1.2 I/O Module Definition

The following PiC modules are defined as I/O modules.

1. AC or DC Output Module.
2. AC or DC Input Module.
3. TTL Module.
4. Video Interface Module.
5. Video Memory Module.
6. D/A Converter Module.
7. Data Acquisition Module.
8. RS-232 Module.
9. Encoder Module.
10. Digitizing Reference Module.
11. µProcessor Digitizing Module.
12. Step Rate Position Counter Module.
13. Programmable Timer Module.
14. FIFO Module.
15. 4 to 20 mA Output Module.
16. FPA Processor Module.

12.5.1.3 Required Hardware

A Resistor Termination Module (part number 502-02881-10) must be present in each rack that contains I/O modules to be tested. The Resistor Termination Module can be inserted into any slot in the PiC rack. This module should be removed immediately after the test.

12.5.2 Accessing the I/O Module Address Detect Test

1. With the Diagnostic Menu displayed, type in a "4" and press RETURN. The Main Menu of the I/O Module Address Test will be displayed. This menu is as follows:

```
I/O MODULE ADDRESS DETECT MENU

1 - INITIALIZE OR DELETE TABLE TABLE
2 - ADD A MODULE TO THE TABLE
3 - DISPLAY MODULES IN THE TABLE
4 - DELETE A MODULE FROM THE TABLE
5 - TEST MODULE ADDRESSING

USE AUX1 MENU OR MODE SWITCH TO LOAD
TABLE DATA
USE AUX2 MENU TO RECORD TABLE DATA

SELECT (1-5)
```

Each option has its own menu that guides the user through related operations. To select an option, type in the number associated with the option and press the Return key. When an option is selected, its menu will be displayed and all related functions will be active.

NOTE

Press the ESCAPE key on the keyboard to display the I/O Module Address Detect Menu. This will work from any submenu of the I/O Module Address Detect Menu.

12.5.3 Initializing the I/O Module Address Table

This option initializes the I/O Module Address Table, allowing data to be typed in. Initializing the table erases existing information in the table. This option is selected the first time an I/O Module Address Table is typed in or when an existing table is to be deleted.

1. With the I/O Module Address Detect Menu displayed, type in a "1" and press RETURN. The following will be displayed:

```
INTIALIZE I/O MODULE DATA TABLE
*** WARNING ALL CURRENT TABLE DATA WILL
BE DESTROYED***

INITIALIZE Y OR N?
```

2. Initialization will delete the existing I/O Module Data Table information. Press "Y" if you want to initialize the Address Table. The following will be displayed:

```
DATA TABLE INITIALIZED


PRESS ESC TO RETURN TO THE MENU
```

   Press "ESC" to return to the I/O Module Address Detect Menu.

3. Press "N" if you do not want to initialize the data table. The I/O Module Address Detect Menu will automatically be displayed.

12.5.4 Adding Table Data

This option allows address data for an I/O module to be added to the I/O Module Address Table. If an error is made while typing in address data, the I/O module must be deleted from the table (Option 4) and the information for that module then re-entered in its desired form.

1. With the I/O Module Address Detect Menu displayed, type in a "2" and press RETURN. The following will be displayed:

```
ADD MENU

1 - ANY 4 POINT OUTPUT
2 - ANY 8 POINT OUTPUT
3 - ANY 8 POINT INPUT
4 - ANY 16 POINT INPUT
5 - TTL
6 - VIDEO INTERFACE
7 - VIDEO MEMORY
8 - D TO A CONVERTER
9 - DATA ACQUISITION
10 - RES-232
11 - ENCODER
12 - DIGITIZING REFERENCE
13 - MICRO DIGITIZING
14 - SRPC OR PROGRAMMABLE TIMER
15 - FIFO
16 - 4 TO 10 MZ OUTPUT
17 - FPA PROCESSOR

PRESS DEL OR RUB TO CHANGE MODULE TYPE,
ESC TO RETURN

PRESS MODULE TYPE (1-17) THEN PRESS
RETURN
```

2. To add a module to the I/O Module Data Table, type in the number corresponding to the correct type of module and press RETURN. The following will be displayed:

```
ENTER DECIMAL START ADDRESS THEN PRESS
RETURN
PRESS DEL OR RUB TO CHANGE ADDRESS
PRESS ESC TO RETURN TO THE MAIN MENU

STARTING ADDRESS =
```

3. Type in the address for the module you are adding to the table and press RETURN. The following will be displayed:

```
ALL MODULES ENTERED Y OR N?
```

If you wish to enter address data for another module, press "N" to remain in the Add Menu. When all data information has been entered, press "Y" to return to the I/O Module Address Detect Menu.

12.5.5 Displaying the I/O Module Address Table

This option displays the I/O modules that have been entered into the I/O Module Address Table. Included in the displayed information is the type of module each one is and the address that was entered as the location of the module.

1. With the I/O Module Address Detect Menu displayed, type in a "3" and press RETURN. The following will be displayed:

```
PRESS THE SPACEBAR TO VIEW TABLE DATA
```

2. Press the spacebar on the keyboard to display the I/O module address entries. They are listed in order of their indicated addresses. When the last entry in the Data Table is shown, the following will be displayed:

```
END OF MODULE DATA

PRESS ESC TO RETURN TO THE MENU
```

12.5.6 Deleting Table Data

This option allows the user to delete address information for an I/O module from the I/O Module Address Table.

1. With the I/O Module Address Detect Menu displayed, type in a "4" and press RETURN. The following will be displayed:

```
DELETE MENU

1 - ANY 4 POINT OUTPUT
2 - ANY 8 POINT OUTPUT
3 - ANY 8 POINT INPUT
4 - ANY 16 POINT INPUT
5 - TTL
6 - VIDEO INTERFACE
7 - VIDEO MEMORY
8 - D TO A CONVERTER
9 - DATA ACQUISITION
10 - RES-232
11 - ENCODER
12 - DIGITIZING REFERENCE
13 - MICRO DIGITIZING
14 - SRPC OR PROGRAMMABLE TIMER
15 - FIFO
16 - 4 TO 10 MZ OUTPUT
17 - FPA PROCESSOR

PRESS DEL OR RUB TO CHANGE MODULE TYPE,
ESC TO RETURN

PRESS MODULE TYPE (1-17) THEN PRESS
RETURN
```

2. To delete a module from the I/O Module Data Table, type in the number corresponding to the correct type of module and press RETURN. The following will be displayed:

```
ENTER DECIMAL START ADDRESS THEN PRESS
RETURN
PRESS DEL OR RUB TO CHANGE ADDRESS
PRESS ESC TO RETURN TO THE MAIN MENU

STARTING ADDRESS =
```

3. Type in the address for the module you are deleting from the table and press RETURN. The following will be displayed:

```
MODULE DELETED

DELETE ANOTHER Y OR N?
```

If you wish to delete address data for another module, press "Y" to remain in the Add Menu. When all desired data information has been deleted, press "N" to return to the I/O Module Address Detect Menu.

12.5.7 Performing the I/O Module Address Test

This option carries out a test of the I/O module addresses. The PiC checks each address location to see if the I/O modules are located at the addresses indicated in the I/O Module Address Table.

IMPORTANT

Remove power from the I/O modules before testing them for address location. Testing I/O module addresses with module power supplies ON may not provide valid results.

Every PiC containing I/O modules that are being tested must contain a Resistor Termination Module. See Section 12.5.1.3 for more information on this module.

---

1. With the I/O Module Address Detect Menu displayed, type in a "5" and press RETURN. The following will be displayed:

```
TEST MODULE ADDRESSING

INSTALL A RESISTOR TERMINATION MODULE
IN EACH RACK
TURN OFF ALL I/O POWER SUPPLIES
* - INDICATES A PASS COMPLETE
PRESS ESC TO EXIT THE TEST

READY TO TEST Y OR N?
```

2. Make certain the power supplies for input modules are turned off. Otherwise, invalid results will be obtained. If you wish to abort the I/O Module Address Test, press "N" to exit and return to the I/O Module Address Detect Menu.

   If you wish to proceed with the I/O Module Address Test, press "Y".

3. If each I/O module is found at the address indicated for it in the I/O Module Data Table, the following will be displayed:

```
****************************

MODULE(S) PRESENT
REMOVE RESISTOR TERMINATION MODULE(S)
IF DONE

CONTINUE TESTING Y OR N?
```

Each asterisk indicates a successful I/O Module Address Test. The text in the display is not shown until the ESC key is pressed, halting the test.

4. Press "Y" to continue the test.

5. Press "N" to exit the I/O Module Address Test and return to the I/O Module Address Detect Menu.

6. If an I/O module or modules cannot be found at the address indicated in the I/O Module Data Table, the name of the first such module and the address entered for it in the I/O Module Address Table will be displayed. In addition, the following prompt is displayed:

```
CONTINUE TESTING Y OR N?
```

7. Press "Y" to display the next addressing error in sequence. Each time "Y" is pressed, the next sequential addressing error located will be displayed until all the addressing errors are indicated. At that time an asterisk will be displayed to indicate that the remaining I/O modules are correctly addressed.

8. Press "N" to exit the I/O Module Address Test and return to the I/O Module Address Detect Menu.

12.6 TROUBLESHOOTING HINTS

Check the following when a module is not found at the address entered for it.

IMPORTANT

TURN OFF THE POWER TO THE PiC BEFORE REMOVING OR INSERTING ANY MICROCOMPUTER MODULES. Failure to do so may result in permanent damage to the module.

---

1. Is the I/O module present in the control?

   Make certain the missing module is in the appropriate rack. If an I/O module is not present in the PiC, it will be listed as missing from the address it is supposed to be found at.

2. If present, is the module correctly addressed?

   After turning off the power to the PiC, remove the module in question. Check the address switch settings on the I/O module to see if the switches are set for the address listed in the I/O Module Address Table. I/O module address switch use is explained for each I/O module in Appendix A of the PiC409 User's Manual

3. If the module is correctly addressed, is there evidence of damage to the module?

   After turning off the power to the PiC, remove the module in question. Visually check for damage to the module. If an I/O module is severely damaged, the address test may not be able to recognize it in the PiC.

4. If the module is an input module, was the input power supply turned off while the address check was underway?

   When an address test is carried out, I/O module power supplies must be turned off. If this is not done, input modules will give erroneous address data.

12.6.1 Overlapping Address Locations

For purposes of explanation, assume that I/O Module A requires 8 address locations. Module A is entered into the address information table at address 2200, when the module is actually incorrectly addressed at 2204. I/O Module B requires 4 address locations. Module B is correctly entered into the address information table at address 2208. This situation results in the address location of Module A (2204-2212) overlapping into the address location of Module B (2208-2212).

When address locations overlap in such a way, the I/O module that is incorrectly addressed (Module A) will not be found at its indicated address. In addition, it is likely that the memory overlap will cause the correctly addressed module (Module B) to not be found at its address location. When the memory locations no longer overlap, the correctly addressed module will be located at its indicated address by the address test.

12.7 RECORDING AND/OR LOADING THE I/O MODULE ADDRESS TABLE

NOTE

Communications must be redirected from the LOADER port to the TERMINAL port to load from or record onto disk. Communications port redirection is carried out from the AUX 1 Mode Select Menu.

Once the I/O Module Address Table is typed in, it can be saved onto a computer floppy disk or a tape so a permanent copy will exist.

The procedures for recording the table onto tape require a knowledge of the use of the RECORD function of the PiC and the use of a loader. The use of the RECORD function is explained in

Section 4.2.1.5 of the PiC409 Family User's Manual. Recording onto a tape cassette (using an STR-LINK II) or a tape cartridge (using an STR-LINK III) is explained in Appendix C of the PiC409 Family User's Manual.

The procedure for recording the table onto floppy disk is explained in Section 7.9 of the GLLADD User's Manual.

An I/O Module Address Table that has been saved to disk or tape can be loaded from disk or tape into PiC memory.

The procedures for loading the table from tape requires a knowledge of the use of the LOAD function of the PiC and the use of a loader. The use of the LOAD function is explained in Section 4.2.1.3 of the PiC409 Family User's Manual. Loading from a tape cassette (using an STR-LINK II) or a tape cartridge (using an STR-LINK III) is explained in Appendix C of the PiC409 Family User's Manual.

The procedure for loading the table from floppy disk is explained in Section 7.9 of the GLLADD User's Manual.

APPENDIX A

VARIABLE ALLOCATION CHART

VARIABLE ALLOCATION CHART

Fill in the variable numbers used in your LDN as shown in the example.

EXAMPLE

VARIABLE ALLOCATION CHART

Program Name G&L Ladder Diagram

VARIABLES 300 THROUGH 399

3 _ _	0	10	20	30	40	50	60	70	80	90
0	300					350	360			
1	301					351	361			
2	302					352	362			
3	303					353	363			
4						354	364			
5		315				355	365			
6		316				356				
7		317				357				
8						358				
9						359				

VARIABLE ALLOCATION CHART

Program Name _____

VARIABLES 0 THROUGH 99

0 _ _	0	10	20	30	40	50	60	70	80	90
0										
1										
2										
3										
4										
5										
6										
7										
8										
9										

VARIABLES 100 THROUGH 199

1 _ _	0	10	20	30	40	50	60	70	80	90
0										
1										
2										
3										
4										
5										
6										
7										
8										
9										

VARIABLES 200 THROUGH 299

2 _ _	0	10	20	30	40	50	60	70	80	90
0										
1										
2										
3										
4										
5										
6										
7										
8										
9										

VARIABLE ALLOCATION CHART

Program Name _____

VARIABLES 300 THROUGH 399

3 _ _	0	10	20	30	40	50	60	70	80	90
0										
1										
2										
3										
4										
5										
6										
7										
8										
9										

VARIABLES 400 THROUGH 499

4 _ _	0	10	20	30	40	50	60	70	80	90
0										
1										
2										
3										
4										
5										
6										
7										
8										
9										

VARIABLES 500 THROUGH 599

5 _ _	0	10	20	30	40	50	60	70	80	90
0										
1										
2										
3										
4										
5										
6										
7										
8										
9										

VARIABLE ALLOCATION CHART

Program Name _____

VARIABLES 600 THROUGH 699

6 _ _	0	10	20	30	40	50	60	70	80	90
0										
1										
2										
3										
4										
5										
6										
7										
8										
9										

VARIABLES 700 THROUGH 799

7 _ _	0	10	20	30	40	50	60	70	80	90
0										
1										
2										
3										
4										
5										
6										
7										
8										
9										

VARIABLES 800 THROUGH 899

8 _ _	0	10	20	30	40	50	60	70	80	90
0										
1										
2										
3										
4										
5										
6										
7										
8										
9										

APPENDIX B

STATEMENT NUMBER ALLOCATION CHART

STATEMENT NUMBER ALLOCATION CHART

Fill in the statement numbers used in your LDN as shown in the example.

EXAMPLE

STATEMENT NUMBER ALLOCATION CHART

Program Name G&L Ladder Diagram

STATEMENT NUMBERS 2300 THROUGH 2399

23 _ _	0	10	20	30	40	50	60	70	80	90
0	2300	2310	2320	2330	2340	2350	2360	2370	2380	
1	2301					2351	2361			
2	2302					2352	2362			
3	2303					2353	2363			
4	2304					2354				
5	2305					2355				
6	2306					2356				
7	2307					2357				
8						2358				
9						2359				

STATEMENT NUMBER ALLOCATION CHART

Program Name _____

STATEMENT NUMBERS 2300 THROUGH 2399

23 _ _	0	10	20	30	40	50	60	70	80	90
0										
1										
2										
3										
4										
5										
6										
7										
8										
9										

STATEMENT NUMBERS 2400 THROUGH 2499

24 _ _	0	10	20	30	40	50	60	70	80	90
0										
1										
2										
3										
4										
5										
6										
7										
8										
9										

STATEMENT NUMBERS 2500 THROUGH 2599

25 _ _	0	10	20	30	40	50	60	70	80	90
0										
1										
2										
3										
4										
5										
6										
7										
8										
9										

STATEMENT NUMBER ALLOCATION CHART

Program Name _____

STATEMENT NUMBERS 2600 THROUGH 2699

26 _ _	0	10	20	30	40	50	60	70	80	90
0										
1										
2										
3										
4										
5										
6										
7										
8										
9										

STATEMENT NUMBERS 2700 THROUGH 2799

27 _ _	0	10	20	30	40	50	60	70	80	90
0										
1										
2										
3										
4										
5										
6										
7										
8										
9										

STATEMENT NUMBERS 2800 THROUGH 2899

28 _ _	0	10	20	30	40	50	60	70	80	90
0										
1										
2										
3										
4										
5										
6										
7										
8										
9										

STATEMENT NUMBER ALLOCATION CHART

Program Name _____

STATEMENT NUMBERS 2900 THROUGH 2999

29 _ _	0	10	20	30	40	50	60	70	80	90
0										
1										
2										
3										
4										
5										
6										
7										
8										
9										

STATEMENT NUMBERS 3300 THROUGH 3399

33 _ _	0	10	20	30	40	50	60	70	80	90
0										
1										
2										
3										
4										
5										
6										
7										
8										
9										

STATEMENT NUMBERS 3400 THROUGH 3499

34 _ _	0	10	20	30	40	50	60	70	80	90
0										
1										
2										
3										
4										
5										
6										
7										
8										
9										

STATEMENT NUMBER ALLOCATION CHART

Program Name _____

STATEMENT NUMBERS 3500 THROUGH 3599

35 _ _	0	10	20	30	40	50	60	70	80	90
0										
1										
2										
3										
4										
5										
6										
7										
8										
9										

STATEMENT NUMBERS 3600 THROUGH 3699

36 _ _	0	10	20	30	40	50	60	70	80	90
0										
1										
2										
3										
4										
5										
6										
7										
8										
9										

STATEMENT NUMBERS 3700 THROUGH 3799

37 _ _	0	10	20	30	40	50	60	70	80	90
0										
1										
2										
3										
4										
5										
6										
7										
8										
9										

STATEMENT NUMBER ALLOCATION CHART

Program Name _____

STATEMENT NUMBERS 3800 THROUGH 3899

38 _ _	0	10	20	30	40	50	60	70	80	90
0										
1										
2										
3										
4										
5										
6										
7										
8										
9										

STATEMENT NUMBERS 3900 THROUGH 3999

39 _ _	0	10	20	30	40	50	60	70	80	90
0										
1										
2										
3										
4										
5										
6										
7										
8										
9										

APPENDIX C

CONTROL RELAY ALLOCATION CHART

CONTROL RELAY ALLOCATION CHART

Fill in the control relays used in your LDN as shown in the example.

EXAMPLE

CONTROL RELAY ALLOCATION CHART

Program Name G&L Ladder Diagram

CONTROL RELAYS 300 THROUGH 399

3 _ _	0	10	20	30	40	50	60	70	80	90
0	300	310	320	330	340	350				
1	301					351				
2	302					352				
3	303					353				
4	304									
5	305		325	335	345	355				
6	306									
7	307									
8										
9										

CONTROL RELAY ALLOCATION CHART

Program Name _____

CONTROL RELAYS 0 THROUGH 99

0 _	0	10	20	30	40	50	60	70	80	90
0										
1										
2										
3										
4										
5										
6										
7										
8										
9										

CONTROL RELAYS 100 THROUGH 199

1 _ _	0	10	20	30	40	50	60	70	80	90
0										
1										
2										
3										
4										
5										
6										
7										
8										
9										

CONTROL RELAYS 200 THROUGH 299

2_ _	0	10	20	30	40	50	60	70	80	90
0										
1										
2										
3										
4										
5										
6										
7										
8										
9										

CONTROL RELAY ALLOCATION CHART

Program Name _____

CONTROL RELAYS 300 THROUGH 399

3 _ _	0	10	20	30	40	50	60	70	80	90
0										
1										
2										
3										
4										
5										
6										
7										
8										
9										

CONTROL RELAYS 400 THROUGH 499

4 _ _	0	10	20	30	40	50	60	70	80	90
0										
1										
2										
3										
4										
5										
6										
7										
8										
9										

CONTROL RELAYS 500 THROUGH 599

5_ _	0	10	20	30	40	50	60	70	80	90
0										
1										
2										
3										
4										
5										
6										
7										
8										
9										

CONTROL RELAY ALLOCATION CHART

Program Name _____

CONTROL RELAYS 600 THROUGH 699

6 _ _	0	10	20	30	40	50	60	70	80	90
0										
1										
2										
3										
4										
5										
6										
7										
8										
9										

CONTROL RELAYS 700 THROUGH 799

7 _ _	0	10	20	30	40	50	60	70	80	90
0										
1										
2										
3										
4										
5										
6										
7										
8										
9										

CONTROL RELAYS 800 THROUGH 899

8_ _	0	10	20	30	40	50	60	70	80	90
0										
1										
2										
3										
4										
5										
6										
7										
8										
9										

CONTROL RELAY ALLOCATION CHART

Program Name _____

CONTROL RELAYS 900 THROUGH 999

9_ _	0	10	20	30	40	50	60	70	80	90
0										
1										
2										
3										
4										
5										
6										
7										
8										
9										

CONTROL RELAYS 1000 THROUGH 1099

10 _ _	0	10	20	30	40	50	60	70	80	90
0										
1										
2										
3										
4										
5										
6										
7										
8										
9										

CONTROL RELAYS 1100 THROUGH 1199

11_ _	0	10	20	30	40	50	60	70	80	90
0										
1										
2										
3										
4										
5										
6										
7										
8										
9										

CONTROL RELAY ALLOCATION CHART

Program Name _____

CONTROL RELAYS 1200 THROUGH 1299

12 _ _	0	10	20	30	40	50	60	70	80	90
0										
1										
2										
3										
4										
5										
6										
7										
8										
9										

CONTROL RELAYS 1300 THROUGH 1399

13 _ _	0	10	20	30	40	50	60	70	80	90
0										
1										
2										
3										
4										
5										
6										
7										
8										
9										

CONTROL RELAYS 1400 THROUGH 1499

14_ _	0	10	20	30	40	50	60	70	80	90
0										
1										
2										
3										
4										
5										
6										
7										
8										
9										

CONTROL RELAY ALLOCATION CHART

Program Name _____

CONTROL RELAYS 1500 THROUGH 1599

15 _ _	0	10	20	30	40	50	60	70	80	90
0										
1										
2										
3										
4										
5										
6										
7										
8										
9										

CONTROL RELAYS 1600 THROUGH 1699

16 _ _	0	10	20	30	40	50	60	70	80	90
0										
1										
2										
3										
4										
5										
6										
7										
8										
9										

CONTROL RELAYS 1700 THROUGH 1799

17 _ _	0	10	20	30	40	50	60	70	80	90
0										
1										
2										
3										
4										
5										
6										
7										
8										
9										

CONTROL RELAY ALLOCATION CHART

Program Name _____

CONTROL RELAYS 1800 THROUGH 1899

18 _ _	0	10	20	30	40	50	60	70	80	90
0										
1										
2										
3										
4										
5										
6										
7										
8										
9										

CONTROL RELAYS 1900 THROUGH 1999

19 _ _	0	10	20	30	40	50	60	70	80	90
0										
1										
2										
3										
4										
5										
6										
7										
8										
9										

CONTROL RELAY ALLOCATION CHART*

Program Name _____

CONTROL RELAYS 3000 THROUGH 3099

30 _	0	10	20	30	40	50	60	70	80	90
0										
1										
2										
3										
4										
5										
6										
7										
8										
9										

CONTROL RELAYS 3100 THROUGH 3199

31 _ _	0	10	20	30	40	50	60	70	80	90
0										
1										
2										
3										
4										
5										
6										
7										
8										
9										

CONTROL RELAYS 3200 THROUGH 3255

32_ _	0	10	20	30	40	50
0						
1						
2						
3						
4						
5						
6						
7						
8						
9						

*Addresses 3000 through 3255 are available for control relays only if they have not been assigned as I/O addresses.

CONTROL RELAY ALLOCATION CHART*

Program Name _____

CONTROL RELAYS 4000 THROUGH 4099

40 _	0	10	20	30	40	50	60	70	80	90
0										
1										
2										
3										
4										
5										
6										
7										
8										
9										

CONTROL RELAYS 4100 THROUGH 4199

41 _ _	0	10	20	30	40	50	60	70	80	90
0										
1										
2										
3										
4										
5										
6										
7										
8										
9										

CONTROL RELAYS 4200 THROUGH 4255

42_ _	0	10	20	30	40	50
0						
1						
2						
3						
4						
5						
6						
7						
8						
9						

*Addresses 4000 through 4255 are available for control relays only if they have not been assigned as I/O addresses.

CONTROL RELAY ALLOCATION CHART*

Program Name _____

CONTROL RELAYS 5000 THROUGH 5099

50 _	0	10	20	30	40	50	60	70	80	90
0										
1										
2										
3										
4										
5										
6										
7										
8										
9										

CONTROL RELAYS 5100 THROUGH 5199

51 _ _	0	10	20	30	40	50	60	70	80	90
0										
1										
2										
3										
4										
5										
6										
7										
8										
9										

CONTROL RELAYS 5200 THROUGH 5255

52_ _	0	10	20	30	40	50
0						
1						
2						
3						
4						
5						
6						
7						
8						
9						

*Addresses 5000 through 5255 are available for control relays only if they have not been assigned as I/O addresses.

CONTROL RELAY ALLOCATION CHART*

Program Name _____

CONTROL RELAYS 6000 THROUGH 6099

60 _	0	10	20	30	40	50	60	70	80	90
0										
1										
2										
3										
4										
5										
6										
7										
8										
9										

CONTROL RELAYS 6100 THROUGH 6199

61 _ _	0	10	20	30	40	50	60	70	80	90
0										
1										
2										
3										
4										
5										
6										
7										
8										
9										

CONTROL RELAYS 6200 THROUGH 6255

62_ _	0	10	20	30	40	50
0						
1						
2						
3						
4						
5						
6						
7						
8						
9						

*Addresses 6000 through 6255 are available for control relays only if they have not been assigned as I/O addresses.

CONTROL RELAY ALLOCATION CHART*

Program Name _____

CONTROL RELAYS 7000 THROUGH 7099

70 _	0	10	20	30	40	50	60	70	80	90
0										
1										
2										
3										
4										
5										
6										
7										
8										
9										

CONTROL RELAYS 7100 THROUGH 7199

71 _ _	0	10	20	30	40	50	60	70	80	90
0										
1										
2										
3										
4										
5										
6										
7										
8										
9										

CONTROL RELAYS 7200 THROUGH 7255

72_ _	0	10	20	30	40	50
0						
1						
2						
3						
4						
5						
6						
7						
8						
9						

*Addresses 7000 through 7255 are available for control relays only if they have not been assigned as I/O addresses.

CONTROL RELAY ALLOCATION CHART*

Program Name _____

CONTROL RELAYS 8000 THROUGH 8099

80_	0	10	20	30	40	50	60	70	80	90
0										
1										
2										
3										
4										
5										
6										
7										
8										
9										

CONTROL RELAYS 8100 THROUGH 8199

81__	0	10	20	30	40	50	60	70	80	90
0										
1										
2										
3										
4										
5										
6										
7										
8										
9										

CONTROL RELAYS 8200 THROUGH 8255

82__	0	10	20	30	40	50
0						
1						
2						
3						
4						
5						
6						
7						
8						
9						

*Addresses 8000 through 8255 are available for control relays only if they have not been assigned as I/O addresses.

CONTROL RELAY ALLOCATION CHART*

Program Name _____

CONTROL RELAYS 9000 THROUGH 9099

90 _	0	10	20	30	40	50	60	70	80	90
0										
1										
2										
3										
4										
5										
6										
7										
8										
9										

CONTROL RELAYS 9100 THROUGH 9199

91 _ _	0	10	20	30	40	50	60	70	80	90
0										
1										
2										
3										
4										
5										
6										
7										
8										
9										

CONTROL RELAYS 9200 THROUGH 9255

92_ _	0	10	20	30	40	50
0						
1						
2						
3						
4						
5						
6						
7						
8						
9						

*Addresses 9000 through 9255 are available for control relays only if they have not been assigned as I/O addresses.

APPENDIX D

ERROR MESSAGES

SYSTEM ERROR MESSAGES

Error Message	Caused By	Corrective Action
SSE Error	Statement Syntax Error. Invalid or improper data entered	Reenter using correct data or format.
DUP Error	Attempting to enter a coil or statement number already used in a ladder diagram.	Assign a new number to the statement or coil.
LDN Error	Invalid or missing op code.	Reload LDN from tape or disk.
MKB Error	Memory check did not indicate memory in full 1 K increments.	Replace memory module(s).
CSM Error	Memory check-sum error. Invalid or missing user's program in memory.	Reload LDN from tape or disk or reinitialize the PiC and reenter the LDN.
OVF Error	Program too large for available memory.	Turn write protect switches off, install more memory or shorten program.
WRT Error	System cannot write into memory location. The location will be displayed in the hexadecimal format.	Replace memory modules
Not Found	System not able to find coil or statement identified by number entered.	Use proper number to identify coil or statement.
Invalid User memory	Entering runtime initialize portion of compiler with a checksum error active.	You must clear user memory while in the runtime initialization mode.
ALOC Error	Allocation in excess of 32,768 bytes.	Allocate Call Routine memory within 32K.
INV Error	Timer number in excess of 511.	Assign a timer number within 511 limit.
SOR Error	Statement number not between 2300 to 2999 or 3300 to 3999. Call Routine not installed.	Assign proper statement number within correct range. Install the Call Routine.
SINT Error	RS-232C Module not addressed at #2236. Printer not on line.	Change address of RS-232C Module to #2236. Check printer connection. Turn SEL on.

APPENDIX E

EXECUTION TIMES AND MEMORY USAGE

EXECUTION TIMES AND MEMORY USAGE

Instruction	Execution Time in Microseconds (uSEC)	Size (bytes)
SET Statement with <, <=, >, >=, <> or ><.	* see below	22 bytes plus 3 bytes per constant.
SET Statement with = operation.	51	22 bytes plus 3 bytes per constant.
SET Contact Not True	16	22 bytes plus 3 bytes per constant.

* If conditions cause the SET statement to SET, it is executed in 53 µSec.
If conditions cause the SET statement not to SET, it is executed in 51 µSec.

LET Statement with addition or subtraction (+ or -).	46	22 bytes plus 3 bytes per constant.
LET Statement with multiplication (*).	140	22 bytes plus 3 bytes per constant.
LET Statement with division (/).	† see below	22 bytes plus 3 bytes per constant.
LET Contact not true.	16	22 bytes plus 3 bytes per constant.

† Any number divided by a one-byte number is executed in 1372 µSec.
Any number divided by a two-byte number is executed in 598 µSec.
Any number divided by a three-byte number is executed in 210 µSec.

GOTO Contact true	29	16 bytes
GOTO Contact not true	16	16 bytes

CALL Contact True	N. A.	16 bytes plus 3 per parameter plus 3 for each parameter that is a constant.
CALL Contact Not True	16	16 bytes plus 3 per parameter plus 3 for each parameter that is a constant.

NOTE: When used in a statement, constants consume 3 bytes of memory. For example, a Call Routine may have 2 parameters; one a variable and the other a constant. Each parameter consumes 3 bytes and the constant consumes an additional 3 bytes (for a total of 9 bytes).

N.O. or N.C Contacts.	2.5	4 bytes
Coil	2.5	3 bytes
Timer Coil (TE or TD)	65	3 bytes
Branch	4	4 bytes

EXAMPLE

The following example illustrates a time and memory usage calculation for a typical LDC and statement. Refer to FIGURE 1.

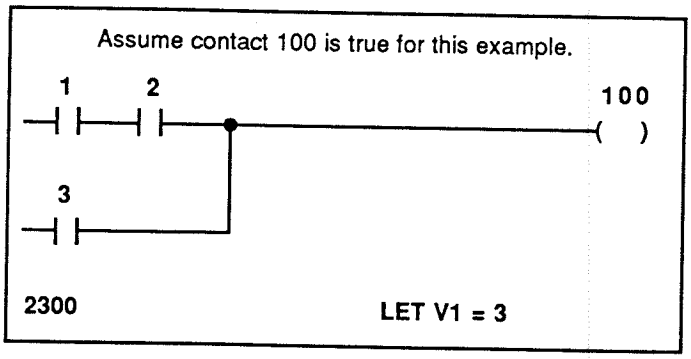

FIGURE 1 TIME-MEMORY CALCULATION

Instruction	Execution Time (uSEC)	Memory Used (bytes)
Contact 1	2.5	4
Contact 2	2.5	4
Contact 3	2.5	4
Branch	4	4
Coil	2.5	3
Let	46	22
Constant	–	3
Total	**60**	**44**

APPENDIX F

HEXADECIMAL AND DECIMAL CONVERSION

HEXADECIMAL AND DECIMAL CONVERSION CHART

THOUSANDS		HUNDREDS		TENS		UNITS	
HEX	Decimal	HEX	Decimal	HEX	Decimal	HEX	Decimal
0	0	0	0	0	0	0	0
1	4096	1	256	1	16	1	1
2	8192	2	512	2	32	2	2
3	12288	3	768	3	48	3	3
4	16384	4	1024	4	64	4	4
5	20480	5	1280	5	80	5	5
6	24576	6	1536	6	96	6	6
7	28672	7	1792	7	112	7	7
8	32768	8	2048	8	128	8	8
9	36864	9	2304	9	144	9	9
A	40960	A	2560	A	160	A	10
B	45056	B	2816	B	176	B	11
C	49152	C	3072	C	192	C	12
D	53248	D	3328	D	208	D	13
E	57344	E	3584	E	224	E	14
F	61440	F	3840	F	240	F	15

EXAMPLE: Find the decimal equivalent of the Hexadecimal number AE7F.

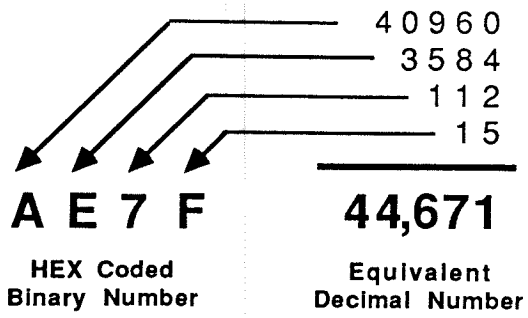

APPENDIX G

ASCII CODE

ASCII CODE

Decimal Number	HEX Code	Char.	Definition
0	00	NUL	Null
1	01	SOH	Start of Heading
2	02	STX	Start of Text
3	03	ETX	End of Text
4	04	EOT	End of Transmission
5	05	ENQ	Enquiry
6	06	ACK	Acknowledge
7	07	BEL	Bell or Alarm
8	08	BS	Backspace
9	09	HT	Horizontal Tabulation
10	0A	LF	Line Feed
11	0B	VT	Vertical Tabulation
12	0C	FF	Form Feed
13	0D	CR	Carriage Return
14	0E	SO	Shift Out
15	0F	SI	Shift In
16	10	DLE	Data Link Escape
17	11	DC1	Device Control 1
18	12	DC2	Device Control 2
19	13	DC3	Device Control 3
20	14	DC4	Device Control 4
21	15	NAK	Negative Acknowledge
22	16	SYN	Synchronous Idle
23	17	ETB	End of Transmission Block
24	18	CAN	Cancel
25	19	EM	End of Medium
26	1A	SUB	Substitute
27	1B	ESC	Escape
28	1C	FS	File Separator
29	1D	GS	Group Separator

Decimal Number	HEX Code	Char.	Definition
30	1E	RS	Record Separator
31	1F	US	Unit Separator
32	20	SP	Space
33	21	!	
34	22	"	
35	23	#	
36	24	$	
37	25	%	
38	26	&	
39	27	'	
40	28	(	
41	29	)	
42	2A	*	
43	2B	+	
44	2C	,	
45	2D	-	
46	2E	.	
47	2F	/	
48	30	0	
49	31	1	
50	32	2	
51	33	3	
52	34	4	
53	35	5	
54	36	6	
55	37	7	
56	38	8	
57	39	9	
58	3A	:	
59	3B	;	

ASCII CODE

Decimal Number	HEX Code	Char.
60	3C	
61	3D	=
62	3E	
63	3F	?
64	40	@
65	41	A
66	42	B
67	43	C
68	44	D
69	45	E
70	46	F
71	47	G
72	48	H
73	49	I
74	4A	J
75	4B	K
76	4C	L
77	4D	M
78	4E	N
79	4F	O
80	50	P
81	51	Q
82	52	R
83	53	S
84	54	T
85	55	U
86	56	V
87	57	W
88	58	X
89	59	Y

Decimal Number	HEX Code	Char.
90	5A	Z
91	5B	
92	5C	
93	5D	
94	5E	
95	5F	_
96	60	
97	61	a
98	62	b
99	63	c
100	64	d
101	65	e
102	66	f
103	67	g
104	68	h
105	69	i
106	6A	j
107	6B	k
108	6C	l
109	6D	m

Decimal Number	HEX Code	Char.
110	6E	n
111	6F	o
112	70	p
113	71	q
114	72	r
115	73	s
116	74	t
117	75	u
118	76	v
119	77	w
120	78	x
121	79	y
122	7A	z
123	7B	
124	7C	
125	7D	
126	7E	
127	7F	DEL Delete

APPENDIX H

SYSTEM CONTROL RELAYS

SYSTEM CONTROL RELAYS

The following control relays are defined and used in all PiC409 and PiC49 systems. Information on using the system control relays in specific Call Routines can be found in the individual Call Routine write-ups.

Control Relay	Name	Function
1970*	Emergency Stop	Control Relay 1970 energizes when a loss of feedback (in systems utilizing resolvers) or excess following error is detected. Control relay 1875 (Machine On flag) must be energized to detect a loss of feedback. Control relay 1875 is explained in the write-ups for the C260 and C270 series of Call Routines. To reset control relay 1970, correct the condition that caused the fault and set control relay 1971, the Emergency Stop Reset flag. The user must reset control relay 1971 before it can be set again.
1972*	Data Error	Control relay 1972 energizes if the same module is not addressed for all calls, or if the parameters are out of range, or if a parameter is supposed to be a variable and it is not.
1973*	Column too Long	Control relay 1973 energizes if the time required to carry out the foreground routine exceeds the allotted interrupt time.
1975	Interrupts Active	Control relay 1975 energizes when interrupts are running.
1991*	LDN Destination Error	Control relay 1991 energizes if a GOTO statement is used that has a non-existent destination.
1992	TE and TD Time Base	Control relay 1992 energizes when the time base selected for timers is 100 milliseconds. Control relay 1992 de-energizes when the selected time base is 10 milliseconds.
1993	FPA Active	Control relay 1993 energizes if an FPA (Floating Point Arithmetic) Module is present in the system and available to perform the division function. The FPA Module is optional.
1994*	FPA Error	Control relay 1994 energizes if an error is indicated when using the FPA Module.
1999*	Arithmetic Overflow	Control relay 1999 energizes if one of the following conditions results from a LET statement: 1. A result from addition, subtraction, or multiplication that exceeds the range +8,388,607 to -8,388,608. 2. An attempt is made to divide by zero (an undefined operation).

*These control relays are fault indicators. When a fault is detected, the corresponding control relay energizes and program execution exits from the Call Routine and returns to the LDN. When a fault occurs, correct the condition that caused the fault and reset the indicator control relay. Once energized, fault indicator control relays remain energized until they are de-energized by the user. Call Routine D120 can be used to determine the cause of a Data Error.