PACIFIC SCIENTIFIC

AUTOMATION TECHNOLOGY GROUP

MOTION TECHNOLOGY DIVISION

110 Fordham Road
Wilmington, MA 01887
(508) 988-9800
Fax (508) 988-9940

Part# 903-564501-04
List Price $25 U.S.
July, 1997
Rev E

5 6 4 5

Microstepping Indexer / Drive

Installation & Hardware Reference Manual

Table of Contents

1 Overview of the 5645 Microstep Indexer/Drive 1-1

1.1 5645 Definition 1-1
1.2 System Diagram 1-3
1.3 How to Use this Manual 1-4

2 Installing the 5645 Microstep Indexer/Drive 2-1

2.1 Unpacking and Inspecting the 5645 2-1
2.2 Selecting a Motor 2-2
2.2.1 Selecting System Components 2-2
2.3 5645 Safety 2-4
2.4 Mounting the 5645 in Your Installation 2-5
2.5 Connecting the Seven Input/Output Cables 2-9
2.5.1 J1 Motor Connection 2-11
2.5.2 J2 120 V ac Power Connection 2-18
2.5.3 J3 Serial Port Connection 2-19
2.5.4 J4 and J5 Discrete Input/Output Connection 2-27
2.5.5 J6 Encoder/Step and Direction Input Connection 2-34
2.5.6 J7 Step and Direction Output Connection 2-38
2.6 Setting the Switches 2-42
2.6.1 Setting Up Functions Using Switch S1 2-43
2.6.2 Setting Up Serial Address Using Switch S2 2-48

3 Powering Up the 5645 Microstep Indexer/Drive 3-1

3.1 Testing the Installation 3-1
3.2 Troubleshooting 3-3
3.2.1 POWER LED Not On 3-4
3.2.2 ENABLED LED Not On 3-6
3.2.3 STEP ACTIVE LED Not On 3-7
3.2.4 POWER FAULT LED On 3-8

3.2.5 OVER TEMP LED On 3-9
3.2.6 MICROPROCESSOR FAULT LED ON 3-10
3.2.7 Communications Interface Fault 3-11

Appendix A - Specifications A-1

Appendix B - Order Number and Ordering Information B-1

Appendix C - Series/Parallel Connections C-1

Index

1 Overview of the 5645 Microstep Indexer/Drive

In this Chapter

This Chapter introduces the 5645 Microstep Indexer/Drive. Topics covered are:

- 5645 definition
- System diagram
- How to use this manual

1.1 5645 Definition

Overview

The Pacific Scientific® 5645 Microstep Indexer/Drive combines a high-performance, bipolar chopper drive with a Pacific Scientific StepperBASIC™ programmable indexer for stepper motor motion control.

Drive features

The output current of the 5645 is switch selectable for current of 5.0 to 8.0 amps/phase RMS (7.1 to 11.3 amps peak) with a 160-volt nominal dc bus. The 5645 is factory preset at 5.0 amps/phase RMS.

Bipolar chopper drive -controls motor current at 20 kHz chopper frequency.

Internal power supplies - operate from the 120-volt ac input. The main motor supply consists of a full wave bridge rectifier into a capacitive input filter with in-rush current limiting.

Shunt regulator circuitry -protects the drive by removing energy from the supply if the dc bus voltage exceeds 200 volts. This feature protects the circuitry from excessive voltage that may be generated under certain motor deceleration conditions.

Short circuit protection circuitry - latches the drive off and lights the POWER FAULT LED if a short circuit occurs on the motor outputs. After removing the short circuit, reset the 5645 by switching the power Off and then On.

Status indicators - LEDs for operation and troubleshooting information.

User-defined functions

Mid-range instability control - eliminates loss of torque and possible motor stalling when operating at mid-range speeds. This instability is a phenomenon of the electronic, magnetic, and mechanical characteristics of a stepping motor system. When enabled, mid-range instability control damps mid-range oscillations by advancing or delaying the switching of the output transistors relative to the incoming pulse train.

Step size - sets the amount of rotation per step. The five settings range from full step to fractions of a full step (microsteps). The microstep settings range from 1/2 to 1/125 microsteps per step for up to 25,000 steps/revolution with a standard 1.8^{o} stepper motor.

Idle current reduction (ICR) - reduces motor winding current by 50% during motor dwell periods. ICR begins one second after the last input step pulse occurs.

Current - sets the output current supplied to the motor. The available RMS current settings are 5, 6, 7.5, and 8 amps.

Indexer features

The indexer circuitry provides programmable motion control and allows flexible interfacing to the application.

Pacific Scientific StepperBASIC™ - programming language with over 100 instructions, combines the ease of the programming language BASIC with sophisticated motion control features.

Serial port RS-232 or RS-422/485 communications -interfacing the user computer or terminal for programming and/or computer control. RS-422/485 control allows multiple 5645 units to be controlled from a single computer or terminal.

12 outputs - user programmable outputs to external devices. One output is program-selectable to indicate motor moving.

16 inputs - user programmable inputs from external devices. Six inputs can be pre-defined for limit, start, stop, and jog functions.

Encoder inputs - for position verification, or for electronic gearing. Alternatively, these inputs can be redefined for external step and direction control.

Step and direction outputs - outputs step and direction signals for control of another drive.

Memory - indexer memory capacity is 12K bytes (battery-backed RAM).

Typical applications

Typical applications for the 5645 microstep indexer/drive include:

- X-Y tables and slides
- Packaging machinery
- Feed to length
- Labeling machines

1.2 System Diagram

The following diagram shows an installation of the drive in a typical system. Your installation may vary from this configuration. Typical components used with the 5645 include:

- Motor
- Computer or terminal
- External switches

Selection and installation guidelines for these components are described in Chapter 2, “Installing the 5645 Microstep Indexer/Drive.”

System Diagram

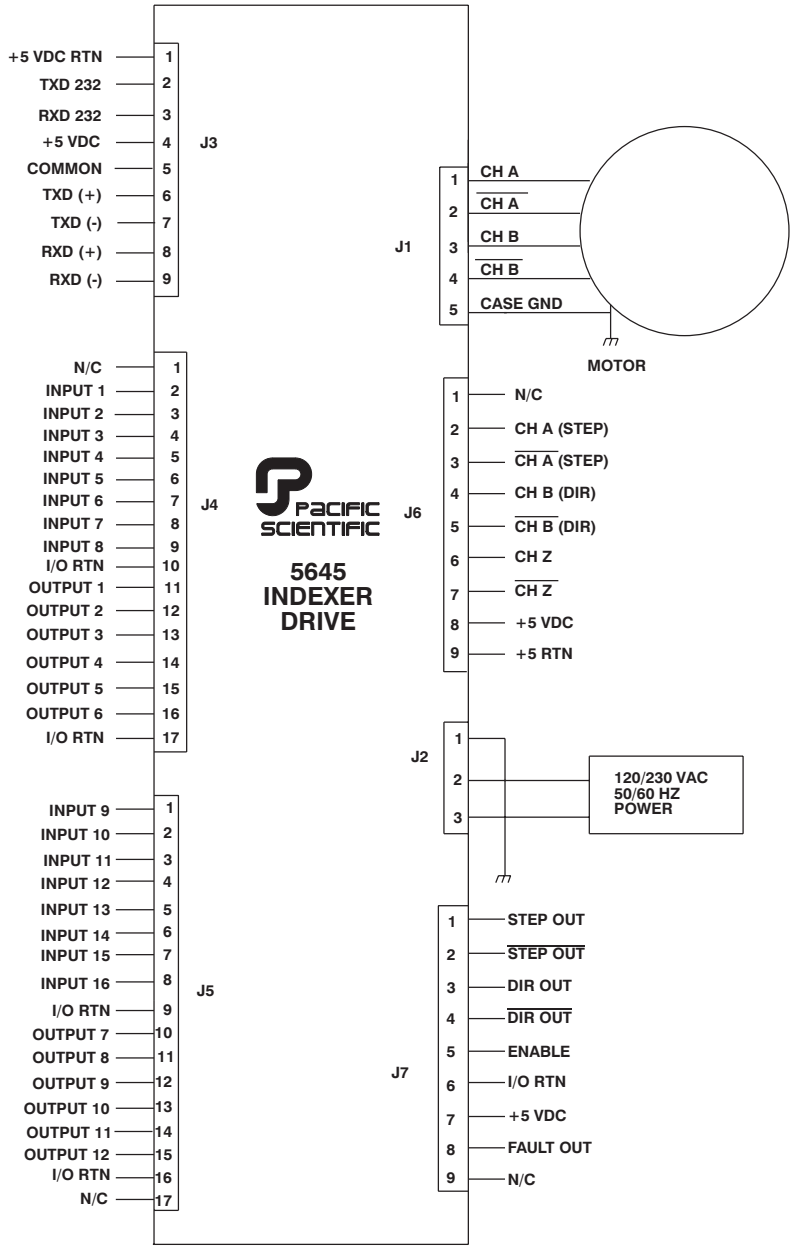

1.3 How to Use this Manual

This manual contains information and procedures to install, set up, test with simple commands, and troubleshoot the 5645. Refer to the StepperBASIC Programming Manual for programming instructions and reference.

2 Installing the 5645 Microstep Indexer/Drive

In this Chapter

This Chapter explains how to install the 5645 Microstep Indexer/Drive. Topics covered are:

- Unpacking and inspecting the 5645
- Selecting a motor
- 5645 safety
- Mounting the 5645 in your installation
- Connecting input/output cabling
- Selecting switch functions

2.1 Unpacking and Inspecting the 5645

Unpacking procedure

1. Remove the 5645 from the shipping carton. Make sure all packing materials are removed from the unit.
2. Check the items against the packing list. A label located on the side of the unit identifies the unit by model number, serial number, and date code.

Inspection procedure

Inspect the unit for any physical damage that may have been sustained during shipment.

If you find damage, either concealed or obvious, contact your buyer to make a claim with the shipper. Do this as soon as possible after receipt of the unit.

Storing the unit

Store the 5645 in a clean, dry place. The storage temperature must be between -55 degrees C and 70 degrees C. To prevent damage during storage, replace the unit in the original shipping carton.

2.2 Selecting a Motor

Selecting a motor

The 5645 is designed for use with Pacific Scientific's line of hybrid stepper motors. The drive works with either the standard line or the enhanced high performance line of stepper motors. Use the system Torque/Speed curves for the 5645 shown in the Pacific Scientific "Motion Control Solutions" Catalog to select the right motor for your application.

To use a motor not included in the system selections, observe the following rules:

- The motor winding current rating must be equal or greater than the drive's output current (5.0, 6.0, 7.5, or 8.0 Amps RMS depending upon jumper settings).
- The electrical and magnetic losses of the motor must not exceed the motor power dissipation rating. This is of special concern at high speed and with low inductance motors. The motor case temperature should not exceed 100 degrees C.

If you need help in selecting a motor, contact your local Pacific Scientific distributor for sizing and motor compatibility assistance.

2.2.1 Selecting System Components

Introduction

Match your 5645 unit to your other components.

Serial communications interfaces

The 5645 requires a serial communication link in order to develop StepperBASIC software (using PacCom). A serial interface may be used under software control to interface the 5645 with other user-supplied equipment such as:

- Operator displays
- Host computers
- Programmable controllers (PLC)

The 5645 uses serial communication interfaces supported by the RS-232 and RS-485 hardware specifications.

Single- and Multi-unit control

For controlling a single 5645, use RS-232 communications and install cable as described in section 2.5.3.1 “J3 Serial Port - RS-232 Connection.”

For controlling multiple 5645s, use RS-422 or RS-485 communications, which permit a single PC to host from 1 to 31 5645s (each requiring a unique switch selectable address). For detailed information on setup refer to section 2.5.3.2 “Serial Port - RS-422 or RS-485 Connection.”

Digital I/O

Control input - One dedicated input to enable the controller. Connecting this input to I/O Return enables the 5645.

Control output - An open collector (NPN) dedicated output showing controller fault status. This output turns off to indicate a fault. Maximum current sinking capability is 50 milliamperes and maximum off voltage is 12 volts.

General inputs - 16 inputs to support logic type interfaces. The input circuitry is intended to be operated with open collector type circuitry. These inputs can be polled under software control. Six of the 16 inputs can be pre-defined for specific functions: LIMIT +/-, START/STOP, JOG +/- and mechanical HOME SWITCH.

General outputs - 12 open collector discrete outputs under software control. Each output can sink a maximum of 50 milliamperes. Maximum off voltage is 12 volts. One of the 12 outputs can be pre-defined for MOTOR MOVING status.

Encoder I/O - The external encoder I/O port permits interfacing to quadrature type encoder signals for applications such as electronic gearing. This input can also be configured by software as a step and direction input.

Note: *Factory default is for quadrature encoder inputs.*

Step/Dir Out - The Step/Dir output permits controlling external devices so they can follow step and direction from the 5645. This output signal is present as long as the 5645 is enabled and executing any motion profile.

2.3 5645 Safety

Your responsibility

As the user or person applying this unit, you are responsible for determining the suitability of this product for any application you intend. In no event will Pacific Scientific Company be responsible or liable for indirect or consequential damage resulting from the use of this product.

Safety background

Under direct off-line conditions, all circuitry not on the indexer board is electrically "hot" with respect to earth ground. The indexer board is optically isolated from the hot circuitry. All user I/O circuitry is connected to the indexer.

The internal drive circuitry will vary from 160 volts above to 160 volts below earth ground potential.

For additional safety benefits, an isolation transformer may be used.

WARNING

The circuits in the 5645 are a potential source of severe electrical shock. Follow the safety guidelines to avoid shock.

Safety guidelines

To avoid possible personal injury whenever you are working with the 5645:

- Do not power up the unit without the cover on and the chassis tied to earth ground.
- Do not operate the unit without the motor case tied to earth ground.
- Do not make any connections to the internal circuitry. The indexer input and output signals are the only safe connection points.
- Always remove power before making or removing connections from the unit.

- Before removing the cover of the unit, shut off power and allow the unit to sit for 5 minutes to discharge the bus capacitors.
- Be careful of the motor terminals when disconnected from the motor. With the motor disconnected and power applied to the drive, the motor terminals have high voltage present.
- Do not use the enable input as a safety shutdown. Always remove power to the drive for a safety shutdown.

2.4 Mounting the 5645 in Your Installation

Cabinet selection

Select a standard 8-inch (205 mm) deep or greater NEMA (National Electrical Manufacturers Association) enclosure appropriate for industrial applications.

CAUTION

The internal cabinet temperature should not exceed 50°C (60°C with derating). If the cabinet is ventilated by filtered or conditioned air make sure to prevent the accumulation of dust and dirt on the unit's electronic components. The air should also be free of corrosive or electrically conductive contaminants.

Mounting dimensions

Prepare the cabinet for the 5645 using the dimensions in inches or millimeters as shown in the following figures.

Mounting dimensions (in inches)

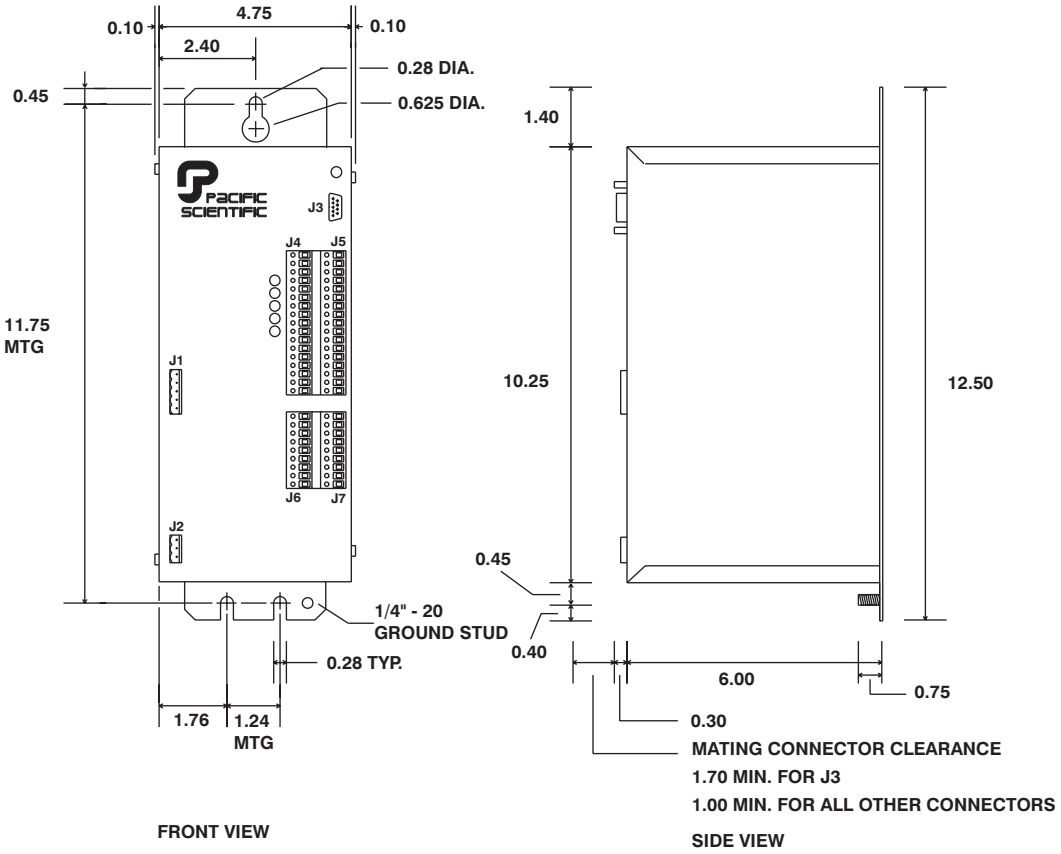

Mounting dimensions (in millimeters)

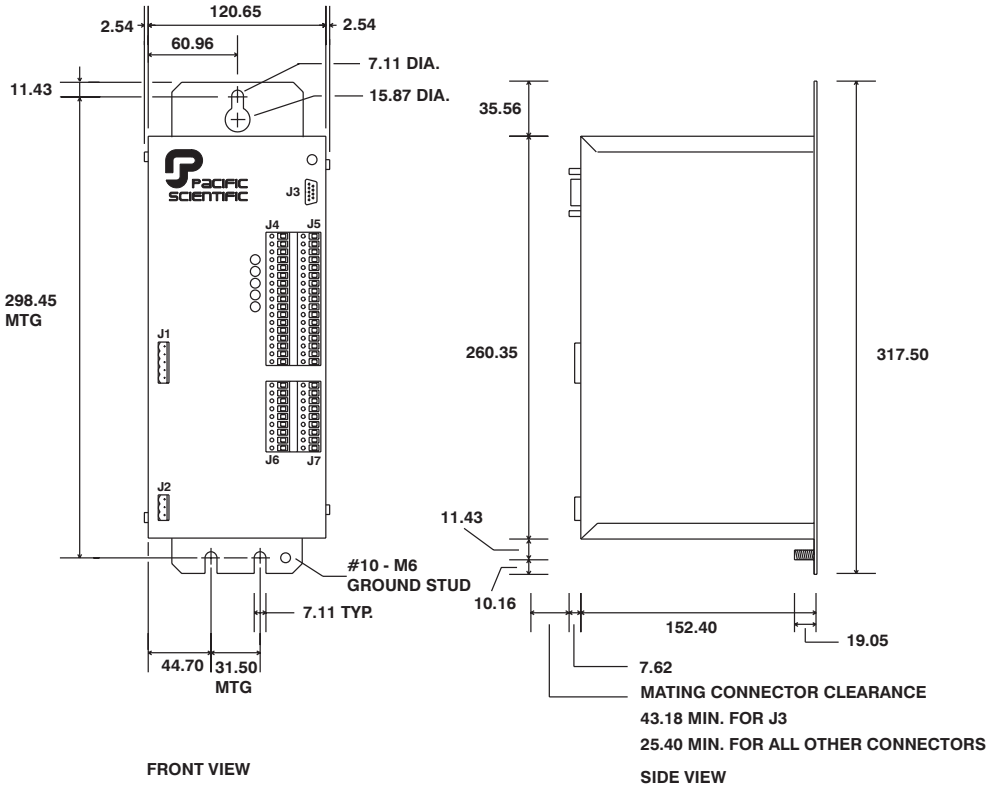

Mounting guidelines

Select a cabinet position that meets these guidelines:

- Flat, solid surface capable of supporting the approximate 9.75 pound (4.423 kilogram) weight of the unit.
- Free of excessive vibration or shock.
- Minimum unobstructed space of two inches (50 mm) at the fan input on the unit bottom and the exhaust on the unit top.
- Operating temperature of:

  0 to 50 degrees C at full rated current

  0 to 60 degrees C at 5.0 to 6.0 amp current setting with idle current reduction enabled.

Mounting procedure

Bolt the unit to the cabinet using the three slots (refer to the dimensions figure) using a 1/4 - 20 or #10 (M6 metric equivalent) bolt.

Power dissipation for cabinet

The 5645 dissipates power causing cabinet heating. Power dissipation is determined by a number of factors, such as output current, motor winding impedance, input step rates, and idle current reduction. The 5645 is factory preset for 5 amps/phase current and idle current reduction enabled.

For an estimate of the power dissipation for use in calculating cabinet cooling requirements, use the values shown below:

For an RMS current of (amps):	**Use a value of (watts):**
8.0	90
7.5	80
6.0	50
5.0	35

2.5 Connecting the Seven Input/Output Cables

Introduction

The seven input/output connectors are:

- J1-Motor
- J2-120 volt ac power
- J3-RS-232/RS485 serial port
- J4-Discrete inputs and outputs
- J5-Discrete inputs and outputs
- J6-Encoder/Step and direction inputs
- J7-Step and direction outputs, fault output, and enable input

Note: *These inputs and outputs are shown on the next page.*

Wiring is application specific

Wiring sizes, wiring practices, and grounding/shielding techniques described in the following section represent common wiring practices and should prove satisfactory in the majority of applications.

CAUTION

Non-standard applications, local electrical codes, special operating conditions, and system configuration wiring needs take precedence over the information included here. Therefore, you may need to wire the driver differently than described here.

Noise pickup reduction

Use shielded and twisted cabling for the signal and power cables. This precaution reduces electrical noise.

Shock hazard reduction

Refer to section 2.3 for safety information that must be followed to reduce shock hazard.

Connection diagram

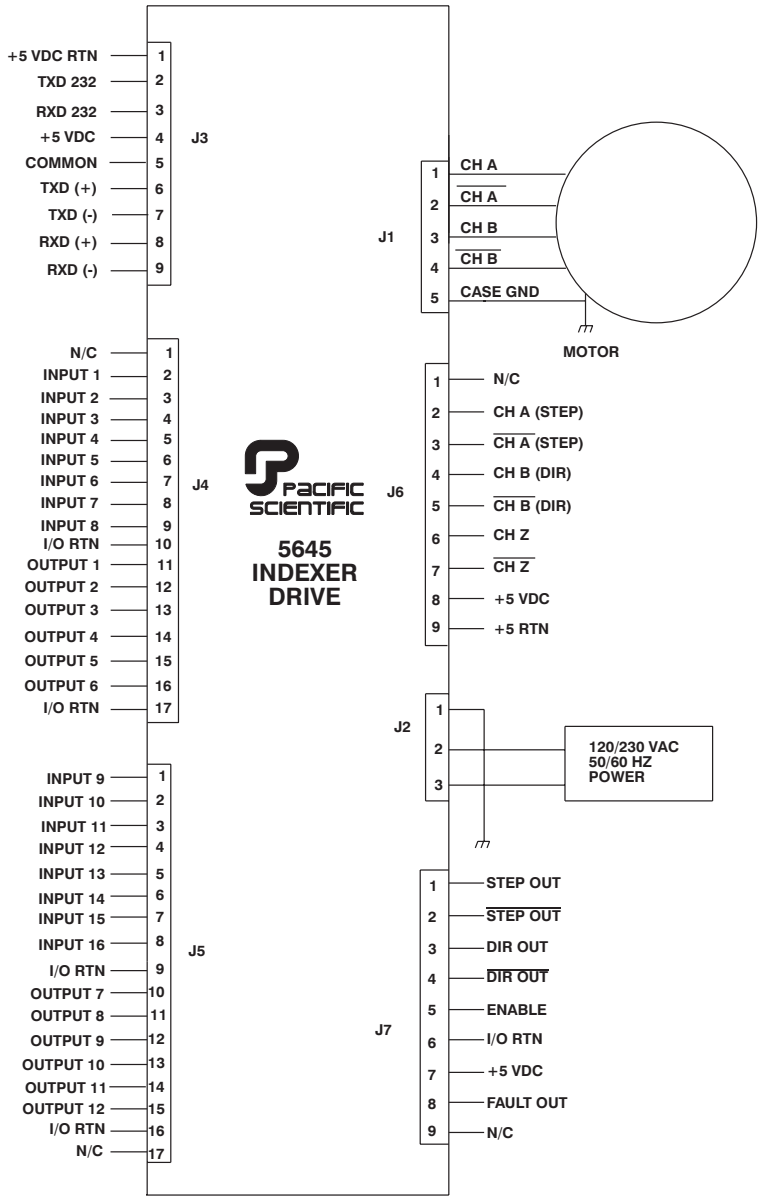

To install connector:	Refer to Section:
J1	2.5.1
J2	2.5.2
J3	2.5.3
J4 and J5	2.5.4
J6	2.5.6
J7	2.5.7

2.5.1 J1 Motor Connection

Introduction

The J1 motor cable connects the drive to the motor windings. Motor cables are available from Pacific Scientific, or you can make your own.

Note: *Refer to Appendix C, "Series/Parallel Connections" for additional information.*

Mating connector

The J1 motor connector is for a PCD 5-pin screw mating connector. The mating connector, supplied with the unit, is ELFH05110.

Making your own cable

If you need to build the cable, refer to the appropriate subsection as follows:

To build the cable for motor type:	Refer to Section:
4-lead	2.5.1.1
8-lead series	2.5.1.2
8-lead parallel	2.5.1.3

Pacific Scientific cable

If the motor cable is purchased from Pacific Scientific, install as follows. The Pacific Scientific order number is SPC-xxx , where "xxx" is the length in one-foot increments up to 50 feet. For example, SPC-050 is a cable 50 feet long.

Pacific Scientific cabling installation

If you are using Pacific Scientific motor cable with the mating connectors already attached, install as follows:

Pacific Scientific cable diagram

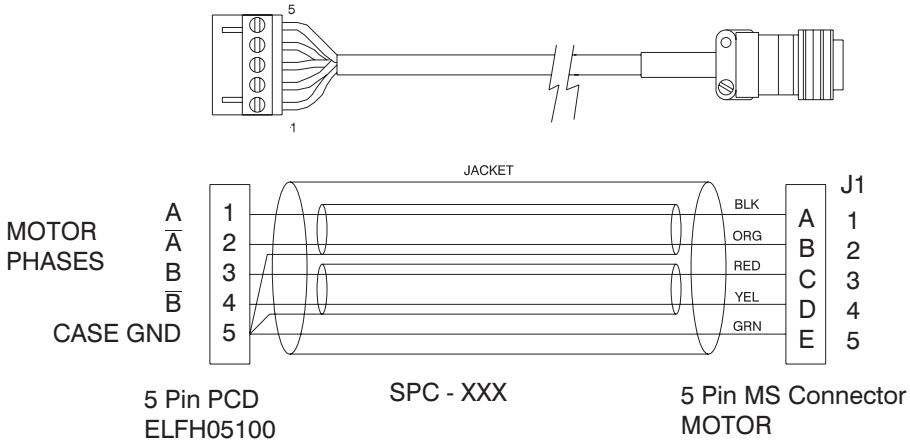

Procedure

1. Remove power from the 5645.

WARNING

Always remove power before making or removing connections to the unit. The motor terminals have high voltage present when the 5645 is On.

2. Plug the mating connector firmly into the 5645.
3. Plug the other mating connector into the motor and screw down the retaining collar.
4. Reconnect power to the 5645.

2.5.1.1 4-Lead Motor

Introduction

For the 4-lead standard systems motor with MS connector, build and install the cable as follows.

Cable requirements

Use 16- to 14-gauge stranded wire for the cabling. Obtain cable with each winding pair (refer to diagram) twisted at about 3 to 4 turns per inch (1 to 1.5 turns per centimeter). Make sure the cable contains a lead for grounding. As an option, the cable may be shielded to reduce radiated noise. If a shield is used, connect as shown for Pacific Scientific cables.

Cabling diagram

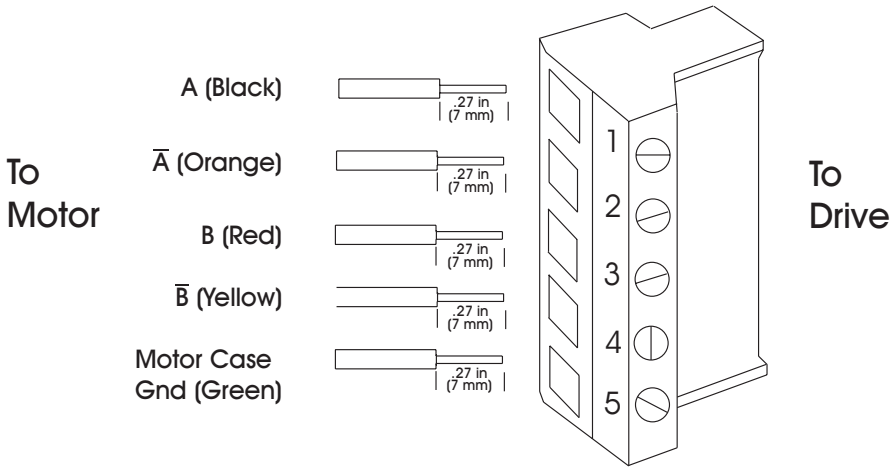

The colors referenced in the diagram follow the Pacific Scientific stepper motor color code.

Procedure

1. Strip the wires to 0.27 inch (7 mm).
2. Attach the wires to the connector as indicated in the diagram.

Note: *Make sure the screws on the PCD connector are tightened down firmly to the wiring.*

CAUTION

Do not pre-tin (solder) the tips of the cables going into the PCD connector. This can result in a loose connection.

3. Remove power from the 5645.

WARNING

Always remove power before making or removing connections to the unit. The motor terminals have high voltage present when the 5645 is On.

4. Plug the mating connector firmly into the 5645.
5. Connect the cable shield to 5645 ground, if applicable.
6. Plug the other mating connector into the motor.
7. Switch On the 5645.

2.5.1.2 8-Lead Motor, Series Connected

Introduction

For an 8-lead motor to be wired in series, build and install the cable as follows:

Cable requirements

Use 16- to 14- gauge stranded wire for the cabling. Obtain cable with each winding pair (see diagram) twisted at about 3 to 4 turns per inch (1 to 1.5 turns per centimeter). Make sure the cable contains a lead for grounding. As an option, the cable may be shielded to reduce radiated noise.

Cabling diagram

The colors referenced in the diagram follow the Pacific Scientific stepper motor color code.

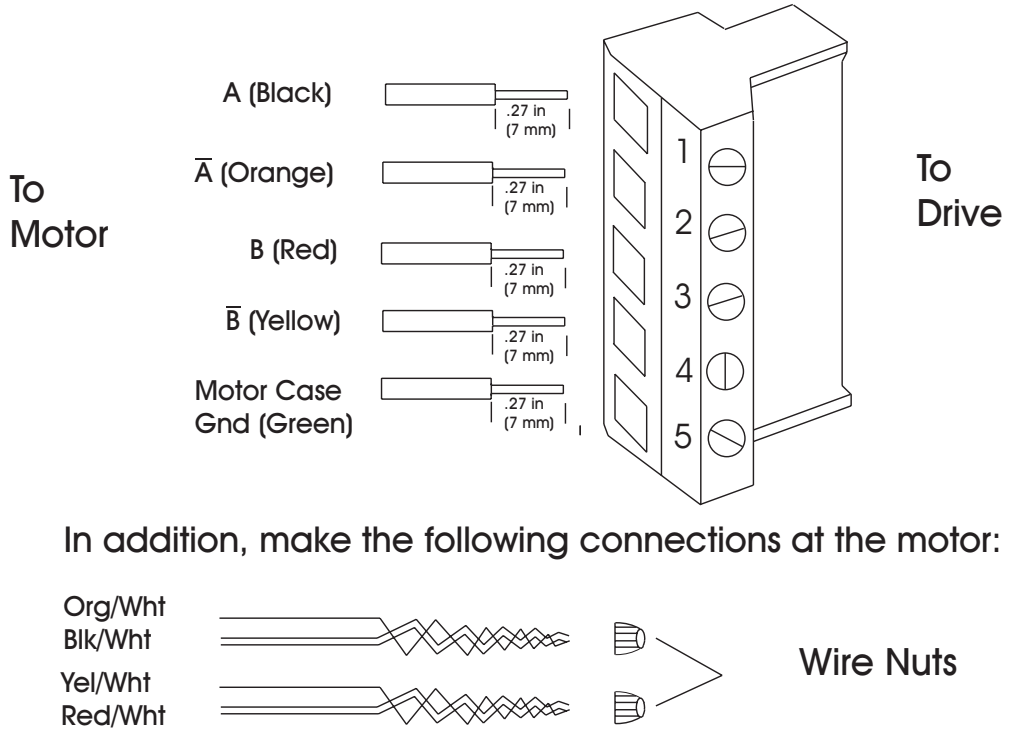

Procedure

1. Strip the wires to 0.27 inch (7 mm).
2. Referring to the diagram, attach the wires to the connector. Connect the white-striped leads with wire nuts as shown.

Note: *Make sure the screws on the PCD connector are tightened down firmly on the wiring.*

CAUTION

Do not pre-tin (solder) the tips of the cables going into the PCD connector. This can result in a loose connection.

3. Remove power from the 5645.

WARNING

Always remove power before making or removing connections to the unit. The motor terminals have high voltage present when the 5645 is On.

4. Plug the mating connector firmly into the 5645.
5. Connect the cable shield to 5645 ground, if applicable.
6. Plug the other mating connector into the motor.
7. Switch On the 5645.

2.5.1.3 8-Lead Motor, Parallel Connected

Introduction

For an 8-lead motor to be wired in parallel, build and install the cable as follows:

Cable requirements

Use 16- to 14- gauge stranded wire for the cabling. Obtain cable with each winding pair (see diagram) twisted at about 3 to 4 turns per inch (1 to 1.5 turns per centimeter). Make sure the cable contains a lead for grounding. As an option, the cable may be shielded to reduce radiated noise.

Cabling diagram

The colors referenced in the diagram follow the Pacific Scientific stepper motor color code.

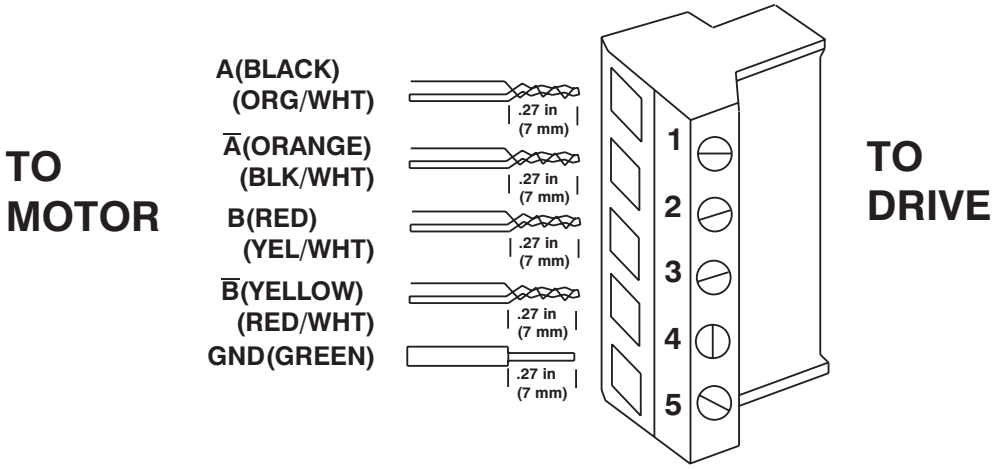

Procedure

1. Strip the wires so that the twisted ends will be the length shown.
2. Referring to the diagram, twist the striped and solid lead ends and attach the wires to the connector.

   Note: *Make sure the screws on the PCD connector are tightened down firmly on the wiring.*

CAUTION

Do not pre-tin (solder) the tips of the cables going into the PCD connector. This can result in a loose connection.

3. Remove power from the 5645.

WARNING

Always remove power before making or removing connections to the unit. The motor terminals have high voltage present when the 5645 is On.

4. Plug the mating connector firmly into the 5645.
5. Connect the cable shield to 5645 ground, if applicable.
6. Switch On the 5645.

2.5.2 J2 120 V ac Power Connection

Introduction

The J2 120 V ac power cable connects voltage to the logic and the motor power supplies.

Mating Connector

The J2 120 V ac power input is for a PCD 3-pin screw mating connector. The connector, supplied with the unit, is ELFH03110.

Cable requirements

Use 16-to 14-gauge shielded wire for the cabling.

Cabling diagram

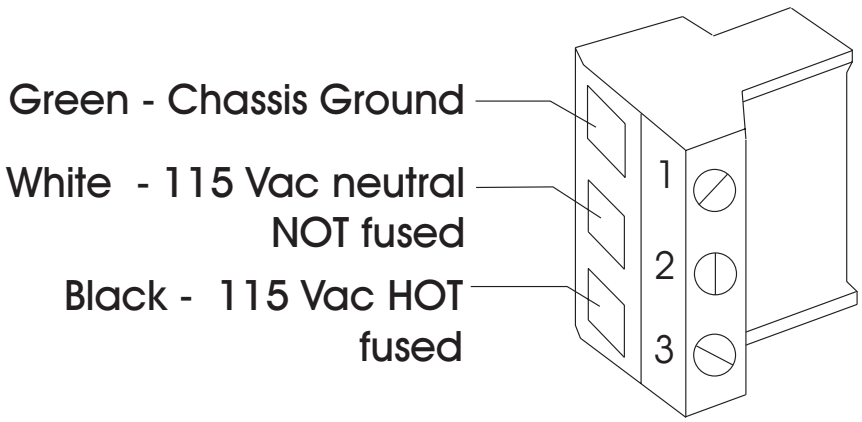

WARNING

Make sure position 3 receives the "hot" 120 V ac input. This position is fused to avoid fire hazard.

Procedure

1. Strip the wires 0.27 inch (7 mm).
2. Attach the wires to the connector as indicated in the diagram.

   Note: *Make sure the screws on the PCD connector are tightened down firmly on the wiring.*

CAUTION

Do not pre-tin (solder) the tips of the cables going into the PCD connector. This can result in a loose connection.

WARNING

The chassis ground must be tied to earth ground. Failure to do this leaves the potential for severe hazard. Make sure the ground is connected via the ground stud on the front of the 5645.

3. Plug the mating connector firmly into the 5645.

2.5.3 J3 Serial I/O Connections

Introduction

The serial port transmits and receives RS-232 or RS485-multidrop serial communication for the user interface of your unit. You can configure to control single or multiple 5645s.

Single- and multi-unit control

- For controlling a single 5645, use RS-232 communications. DIP switch S2 must be set to Address 31 for RS-232 Communications as described in Section 2.6.2.
- For controlling multiple 5645s, RS-422 or RS-485 communications permits a single PC to host from 1 to 31 5645s (each requiring a unique address ranging from 0 to 30, set using DIP switch S2 as described in Section 2.6.2).
- The 5645 utilizes 9600 baud communications with one start bit/one stop bit and eight bit word length in either RS-232 or multidrop format.
- For controlling a single 5645 from a T10 terminal, use RS-232 communications and install cabling as described in section 2.5.3.3, “J3 Serial Port - T10 Connection.”

Serial input/output table - J3

Input/Output	Pin Number	Explanation
+5V Return/ Shield	J3-1	Common/shield - serial port interface.
Txd 232	J3-2	RS-232 transmitter output (from 5645).
Rxd 232	J3-3	RS-232 receiver input (to 5645).
+5 V dc	J3-4	5 volt dc output ***Note**: The total 5 Vdc current from pins J3-4, J6-8 and J7-7 must be less than 450 mA.*
+5 V Common	J3-5	Common - serial port interface.
Txd (+) 485	J3-6	RS-485 transmitter output (from 5645).
Txd (-) 485	J3-7	
Rxd (+) 485	J3-8	RS-485 transmitter input (to 5645)
Rxd (-) 485	J3-9	

Cabling diagram

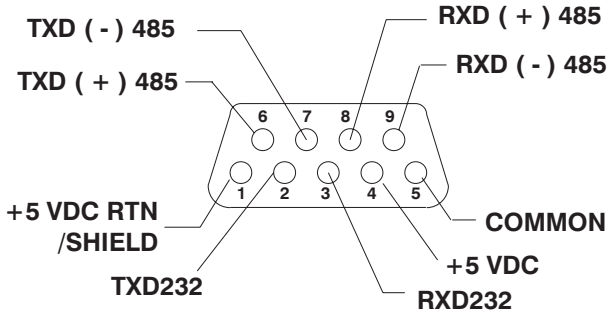

Mating connector

The J3 serial port mating connector, supplied with the unit, is an ITT Cannon DE-9P 9-pin plug-in female D connector.

Cable requirements

Use 22-gauge wire for the cabling. Obtain cable with each I/O pair (refer to the diagram) twisted at about 3 to 4 turns per inch (1 to 1.5 turns per centimeter). As an option, the cable may be shielded to reduce noise pickup.

CAUTION

To avoid ground loops, connect ground shield to indexer ground (J3-1) only.

2.5.3.1 J3 Serial Port - RS-232 Connection

Introduction

This section shows how to connect your PC's RS-232 port to the 5645.

J3 Connections

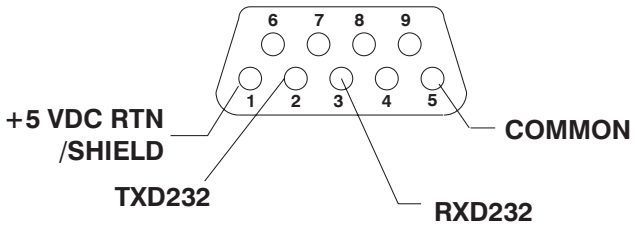

Build the cable to connect to your computer or terminal by referring to the documentation for the device. Standard RS-232 pinouts for IBM compatible personal computers are shown as follows.

Note: *Pinouts vary among computer manufacturers. Check the hardware reference manual for your machine before wiring the serial port.*

RS-232 Connection

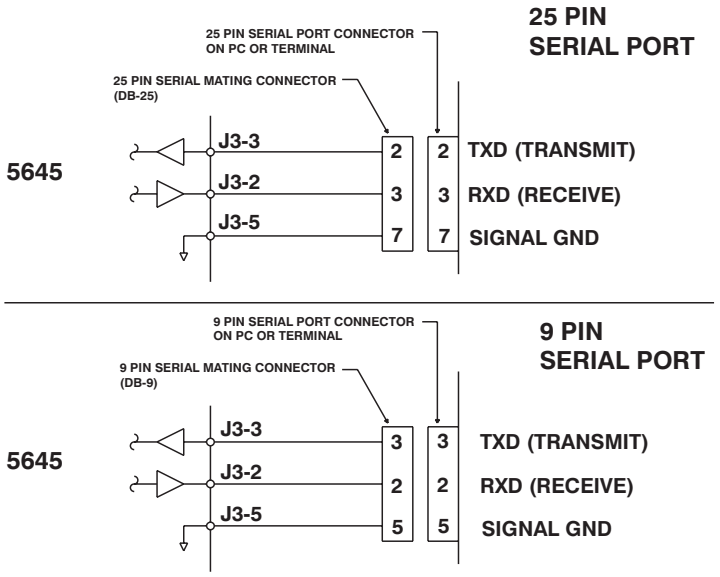

2.5.3.2 J3 Serial Port - RS-422 or RS-485 Connection

Introduction

This section describes how to connect your 5645 to devices supporting RS-422/RS-485 communications.

RS-485/RS-422 Connections

Up to 31 5645s can be connected in parallel to a multidrop master. The 5645s must each have a unique address, set using DIP switch S2 as described in Section 2.6.2.

RS-485/RS-422 connections to J3 are shown below. A multidrop interconnection diagram, showing multiple axes connected to a single host is also included.

Diagram

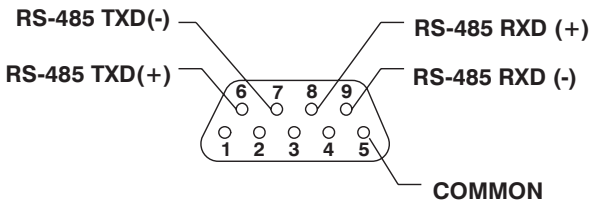

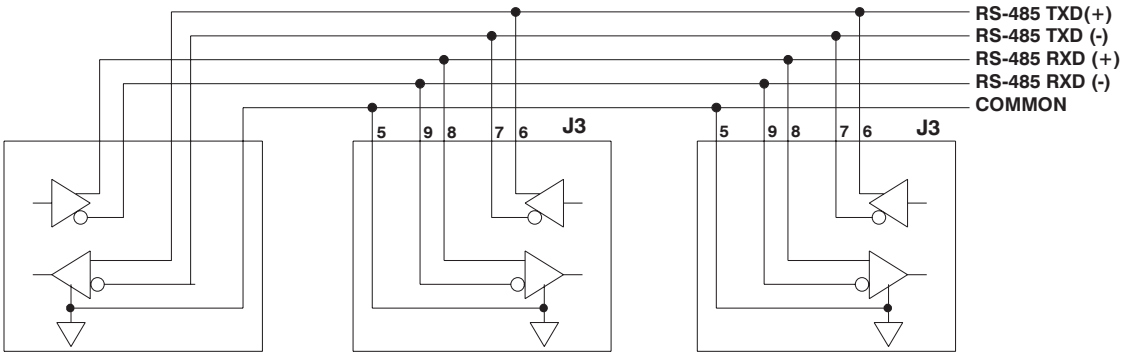

RS-232/RS-485 Converter installation

It is often convenient to use an RS-232 to RS-485/RS-422 converter so that an RS-232 port, available on all PCs, can be used to connect multiple axes. The figure below shows a typical installation, using the B & B Model 422 RS-232 to RS-422 adapter. RS-232 to RS-485/RS-422 adapters are available from many sources.

RS-485/RS-422 pin out diagram

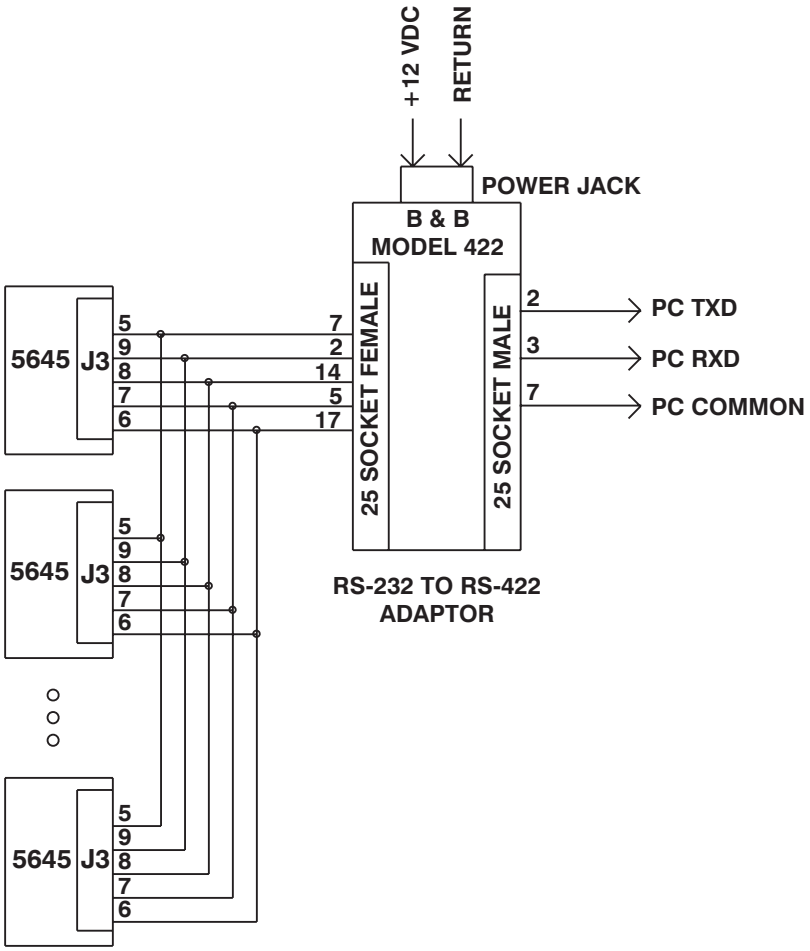

2.5.3.3 J3 Serial Port - T10 Connection

Introduction

This section shows how to connect your 5645 to Pacific Scientific's T10 Terminal.

> **Note:** *The T10 terminal requires a DA-9P 9-pin plug-in male D connector.*

Connection Diagram

Connections between the 5645 and the T10 terminal are shown below:

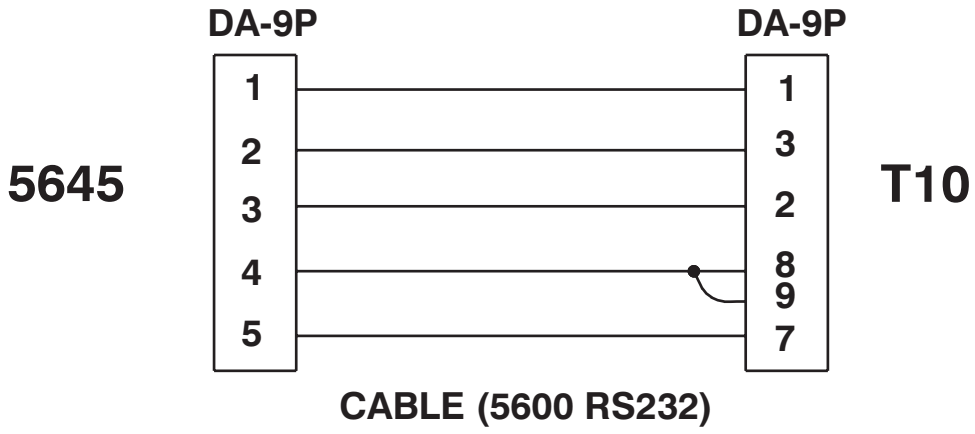

Parameter Setup

Set up the T10 terminal as follows:

1. Enter the setup mode by pressing the "." key while power is applied to the T10 (wait until the two letter prompt appears). Refer to the terminal manual for more information.
2. Enter the following values:

VW = 4	default	LE = 0	Local Echo OFF
TM = 0	character mode	EN = 1	Line Terminator (CR)
TD = 0	turnaround delay	KC = 2	Key Click
BR = 2	baud rate (9600)	KR = 1	Key Repeat
DF = 4	8 bits, no parity	CU = 2	Cursor
HS = 0	default (DTR asserted)		

Note: *The 5645 is always configured for 9600 baud, 8 bit, no parity data formats.*

2.5.4 J4 and J5 Discrete Input/Output Connection

Introduction

Connectors J4 and J5 contain all the programmable inputs and outputs for the 5645:

- The 16 inputs are for external discrete switch-type devices. Inputs are used with functions and variables from the program. Six of the 16 inputs can be used for dedicated functions. The 5645 discrete input circuit is shown at the end of this section, in addition to several drive circuits.
- The 12 outputs are programmable for sending out signals. Output 12 can be dedicated to indicate when the motor is moving. These outputs are driven by open collector NPN transistors and can sink up to 50 mA. Several load configurations are shown at the end of this section.

For information on using the inputs and outputs, refer to the specific variable in the 5645 Programming Manual.

Input/output table

The following table lists the discrete inputs and outputs on connectors J4 and J5.

Input or Output Signal	Pin Number	Explanation
OUT 1	J4-11	Outputs are controlled by the user's program. To turn On an output, set the variable OUTn to 0; to turn it Off, set to 1. For example, if you set OUT6 to 0 in your program, output 6 is active (low), displayed as OUT6 = 0. If you program the predefined variable PREDEF.OUT = 1, output 12 (J5-15) will be active (low) whenever the motor is moving.
OUT 2	J4-12	
OUT 3	J4-13	
OUT 4	J4-14	
OUT 5	J4-15	
OUT 6	J4-16	
OUT 7	J5-10	
OUT 8	J5-11	
OUT 9	J5-12	
OUT 10	J5-13	
OUT 11	J5-14	
OUT 12	J5-15	

Input Table

Input or Output Signal	Pin Number	Explanation
INP1	J4-2	Inputs 1 to 9 are general purpose inputs. For example, if INP6 is connected to I/O Return (J4-10), then INP6 = 0. You can use inputs to signal events, display messages, go to other programming lines, and so on.
INP2	J4-3	
INP3	J4-4	
INP4	J4-5	
INP5	J4-6	
INP6	J4-7	
INP7	J5-8	
INP8	J5-9	
INP9	J5-1	
INP10	J5-2	
INP11	J5-3	
INP12	J5-4	
INP13	J5-5	
1NP14	J5-6	
1NP15	J5-7	
INP16	J5-8	

Input or Output Signal	Pin Number	Explanation
Input 10 (Limit +, cw) Input 11 (Limit -, c.cw)	J5-2 J5-3	These inputs limit rotation direction. To set: Limit+ (clockwise), program PREDEF.INP10 = 1 Limit - (counter-clockwise), program PREDEF.INP11 = 1
Input 12 (Start)	J5-4	This input starts motor motion using the GO statement, or starts the program using the RUN command. Activate this input by programming PREDEF. INP12 = 1. Change the value of RMT.START for other options.
Input 13 (Stop)	J5-5	This input stops program execution. Any motion in progress is stopped immediately. Activate this input by programming PREDEF.INP13 = 1. Note: *Do not use input 13 for an emergency stop to prevent personal injury. Use a hard-wired switch connected to the power source for an emergency stop*.
Input 14 (Jog+, cw) Input 15 (Jog-, c.cw)	J5-6 J5-7	These inputs control rotation direction and speed. This function is useful for testing because it only requires an enable signal for automatic motor running; a program is not needed. To set: Jog +, program PREDEF.INP14 = 1 Jog -, program PREDEF.INP15 = 1 Note: *Jog inputs will not initiate jogging if a program is running.*

Input or Output Signal	Pin Number	Explanation
Input 16 (Mechanical home switch)	J5-8	This input determines the location of mechanical home. Activate this input by programming SEEK.HOME after connecting a mechanical home switch to the input.
No connect	J4-1, J5-17	These pins are not used.
I/O Return	J4-10, J4-17, J5-9, J5-16	These pins provide the ground for the input and output signals.

Mating connector

The J4 and J5 discrete I/O cables are for a PCD 17-pin screw mating connector. The connectors, supplied with the unit, ELFH17110.

Cable requirements

Use 22- to 14-gauge wire for the cabling.

CAUTION

To avoid ground loops, connect ground shield to user interface only.

Procedure

Connect discrete devices to the 5645 as follows:

1. Refer to the table and connector figure for the desired connections to your discrete devices. Select an I/O RTN for the return to ground for each device. For connection to input or output differential drivers, refer to the diagrams that follow.
2. Strip the wires to 0.27 inch (7 mm).
3. Attach the wires to the connector as indicated in the cabling diagram.

Note: *Make sure the screws on the PCD connector are tightened down firmly on the wiring.*

CAUTION

Do not pre-tin (solder) the tips of the cables going into the PCD connector. This can result in a loose connection.

4. Plug the connector firmly into the 5645.

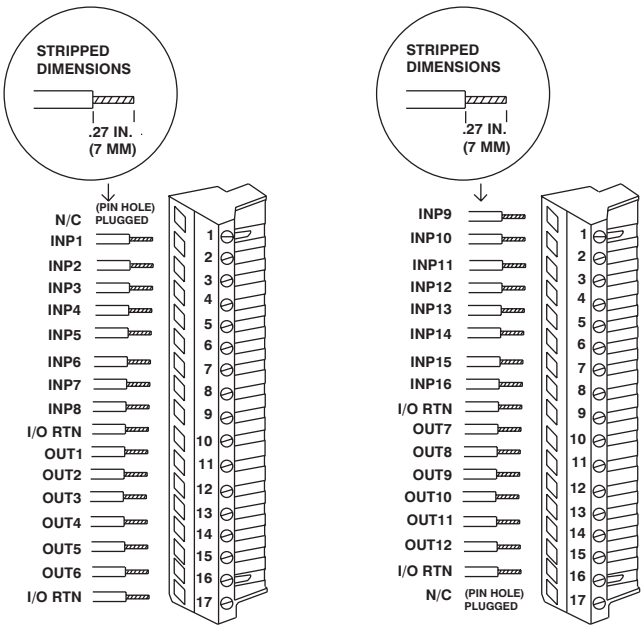

J4 DISCRETE I/O **J5 DISCRETE I/O**

Driving the discrete inputs

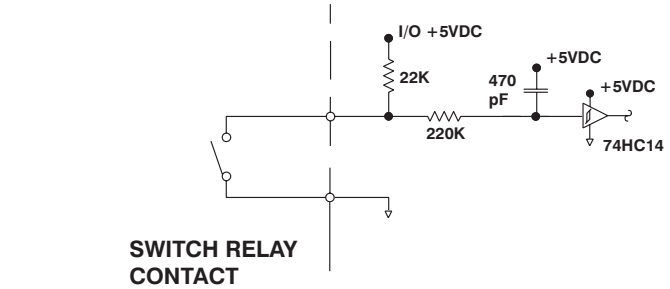

SWITCH RELAY CONTACT

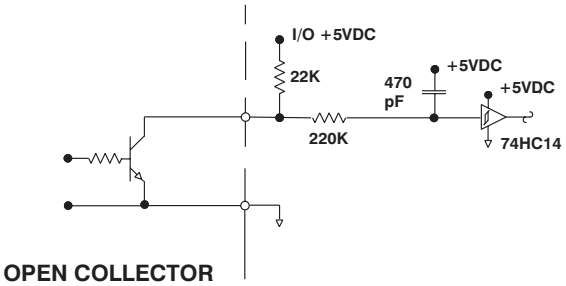

OPEN COLLECTOR

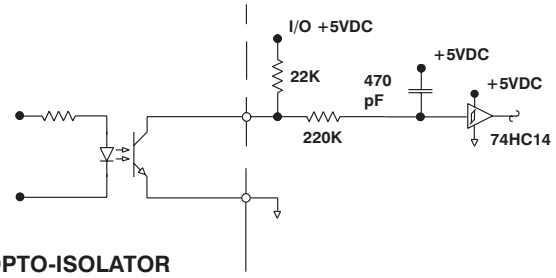

OPTO-ISOLATOR

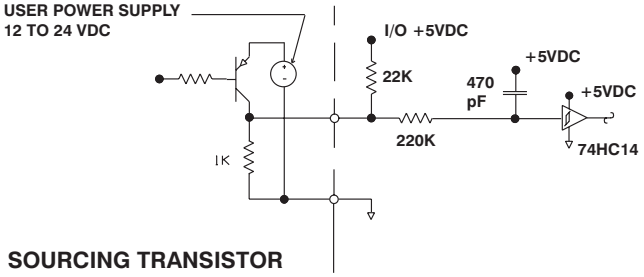

SOURCING TRANSISTOR

Output differential wiring

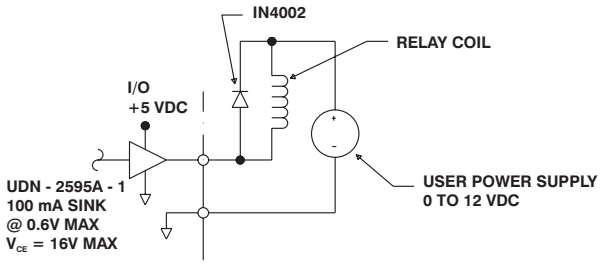

RELAY LOAD

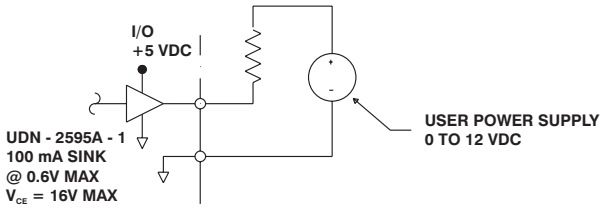

RESISTIVE LOAD

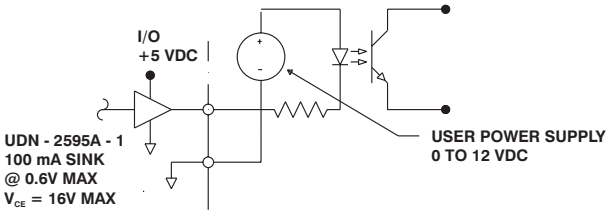

OPTO-ISOLATOR LOAD

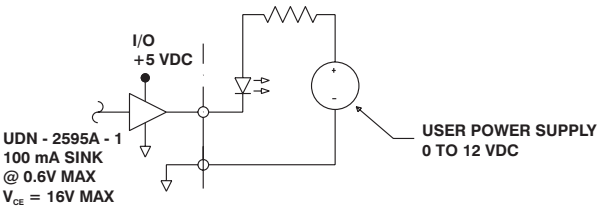

LED INDICATOR LOAD

2.5.5 J6 Encoder/Step and Direction Input Connection

Introduction

Connector J6 accepts encoder quadrature inputs for A, $\overline{A}$, B, $\overline{B}$, Z and $\overline{Z}$ which can be used for electronic gearing, encoder position verification, and stall detection.

Alternatively, a program variable can be set to switch the encoder inputs to external step and direction inputs. These converted inputs are DIR, $\overline{DIR}$, STEP, and $\overline{STEP}$.

Encoder requirement

The encoder must provide quadrature differential, line driver outputs. The receiver IC is an SM75175.

Input table

The following table lists the inputs on connector J6:

Input	Pin Number	Explanation
No connect	J6-1	This pin is not used.
Channel A and $\overline{A}$	J6-2 and J6-3	For the A and $\overline{A}$ quadrature encoder inputs.
Channel B and $\overline{B}$	J6-4 and J6-5	For the B and $\overline{B}$ quadrature encoder inputs.
Channel Z and $\overline{Z}$	J6-6 and J6-7	For the Z and $\overline{Z}$ quadrature inputs.
+ 5 V dc	J6-8	To provide power for the encoder. The maximum allowable load on this pin must be an amount that, when added to the load on pins J3-4 and J7-7, totals to less than 450 mA.
+5 V return	J6-9	To provide 5 volt ground. **Note:** *If using external power, you must connect the power supply ground here.*
Step and $\overline{step}$	J6-2 and J6-3	Alternative input used with STEP.DIR.INPUT = 1 to input step signals for external control.
Direction and $\overline{direction}$	J6-4 and J6-5	Alternative input used with STEP.DIR.INPUT = 1 to input direction signals for external control.

Pacific Scientific cable diagram

If the encoder cable is purchased from Pacific Scientific, install as follows. The Pacific Scientific order number is SEC-xxx, where ”xxx” is the length in one-foot increments. For example, SEC-050 is a cable 50 feet long. This cable connects the 5645 to the encoders on Pacific Scientific system stepper motors.

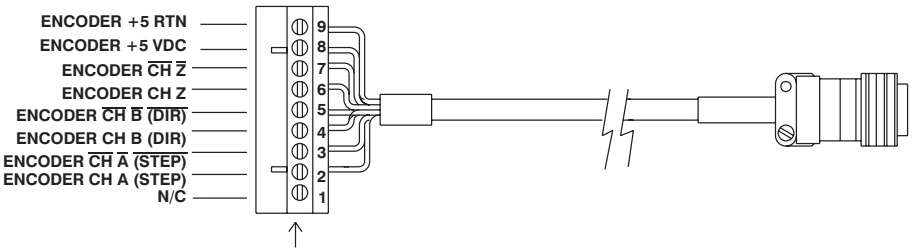

TO J6 CONNECTOR

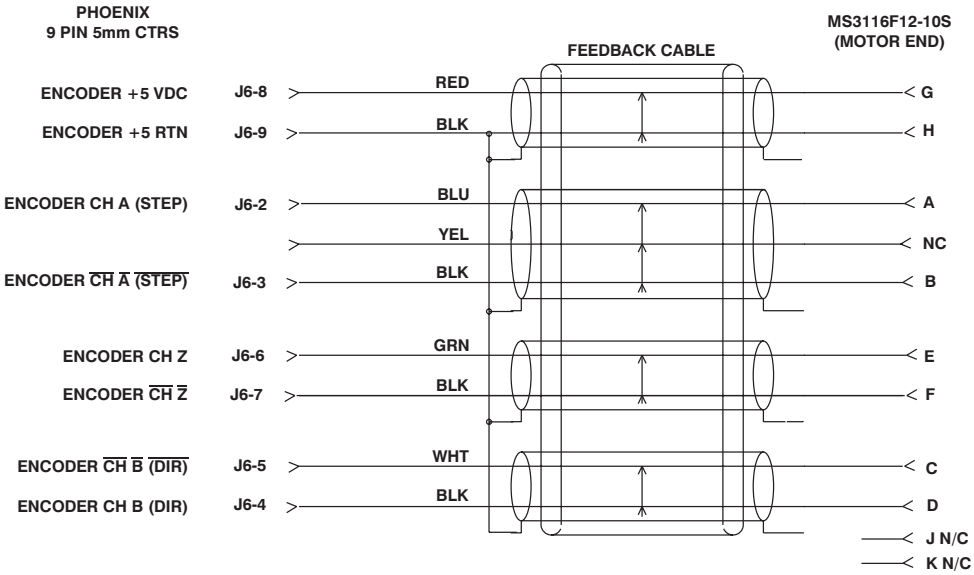

SEC - XXX

NOTE:
1. **INDIVIDUALLY INSULATE SHIELD DRAIN AT MOTOR END.**
2. **INDIVIDUALLY INSULATE UNUSE WIRE AT BOTH ENDS.**

Mating connector

The J6 discrete I/O cables are for a PCD 9-pin screw mating connector. The connector, supplied with the unit, is ELFH09110.

Cable requirements

Use 22- to 14-gauge wire for the cabling.

CAUTION

To avoid ground loops, connect ground shield to user interface only.

Procedure

Connect the encoder or step and direction inputs to the 5345/5445 as follows:

1. Refer to the table and connector figure for the desired input connections. Connect the +5 RTN if using the +5 V dc for the encoder.
2. Strip the wires to 0.27 inch (7 mm).
3. Attach the wires to the connector as indicated in the cabling diagram.

Note: *Make sure the screws on the PCD connector are tightened down firmly on the wiring.*

CAUTION

Do not pre-tin (solder) the tips of the cables going into the PCD connector. This can result in a loose connection.

4. Plug the connector firmly into the 5645.

Cabling diagram

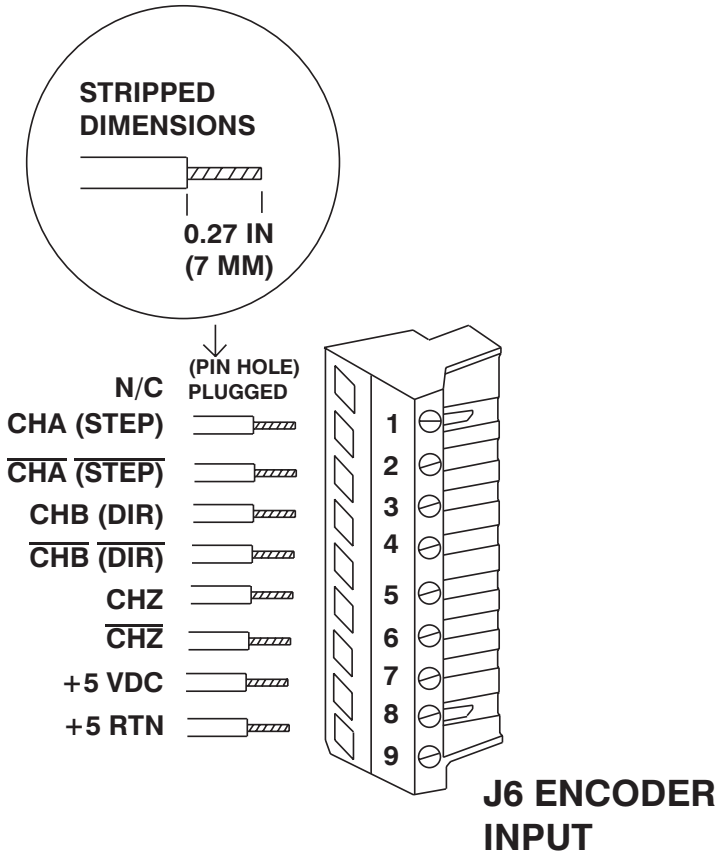

Typical encoder connection

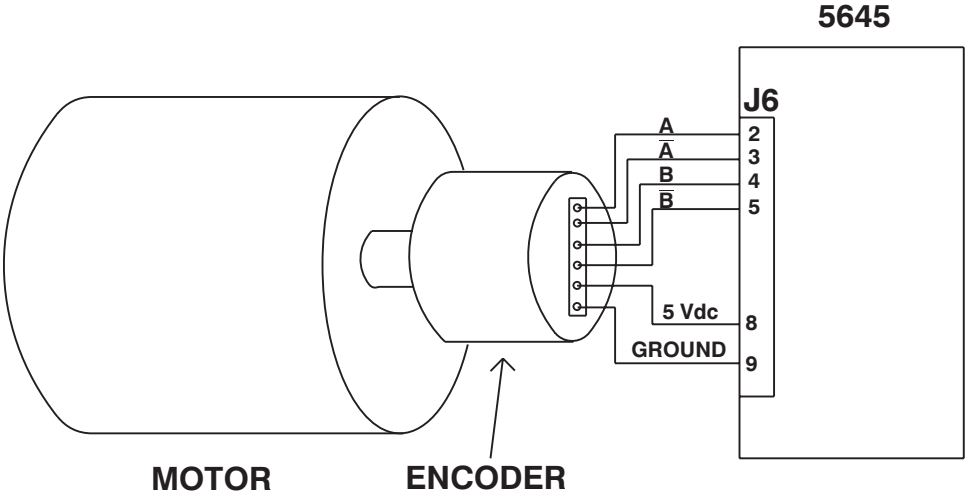

2.5.6 J7 Step and Direction Output Connection

Introduction

Connector J7 outputs step and direction pulses so that external devices can follow step and direction from the 5645. Using these outputs you may control up to two 5645, 5630, 5445 or 5430 drives. The enable input and the fault outputs for the 5645 are also located on J7.

Note: *The Step and Direction outputs are active if the controller is enabled and motion is being commanded.*

Output table

The following table lists the outputs on connector J7:

Output	Pin Number	Explanation
Step out and step out	J7-1 and J7-2	Outputs step signals for controlling external devices. Sinks up to 100 mA.
Direction out and direction out	J7-3 and J7-4	Outputs direction signals for controlling external devices. Sinks up to 100 mA.
Enable	J7-5	Input to enable the 5345/5445 for operation. Connect this input to the I/O Return to enable the 5345/5445.
I/O return	J7-6	Provides ground for the enable input and 5 V output.
+5 V dc	J7-7	Provides power for an external device. The maximum allowable load on this pin must be an amount that, when added to the load on pins J3-4 and J6-8, totals to less than 450 mA.
Fault out	J7-8	This open collector NPN transistor output is ON (low) if no fault and OFF (high) if fault.
No connect	J7-9	This pin is not used.

Mating connector

The J7 discrete output cables are for a PCD 9-pin screw mating connector. The connector, supplied with the unit, is ELFH09110.

Cable requirements

Use 22- to 14-gauge wire for the cabling. Obtain cable for output pairs (refer to table) twisted at about 3 to 4 turns per inch (1 to 1.5 turns per centimeter). As an option, the cable may be shielded to reduce noise pickup.

CAUTION

To avoid ground loops, connect ground shield to user interface only.

Procedure

Connect the step and direction outputs to the 5645 as follows:

1. Refer to the table and connector figure for the desired input connections. Use the I/O RTN with the enable and if using the +5 V dc for a device.
2. Strip the wires to 0.27 inch (7 mm).
3. Attach the wires to the connector as indicated in the cabling diagram.

Note: *Make sure the screws on the PCD connector are tightened down firmly on the wiring.*

CAUTION

Do not pre-tin (solder) the tips of the cables going into the PCD connector. This can result in a loose connection.

4. Plug the connector firmly into the 5645.

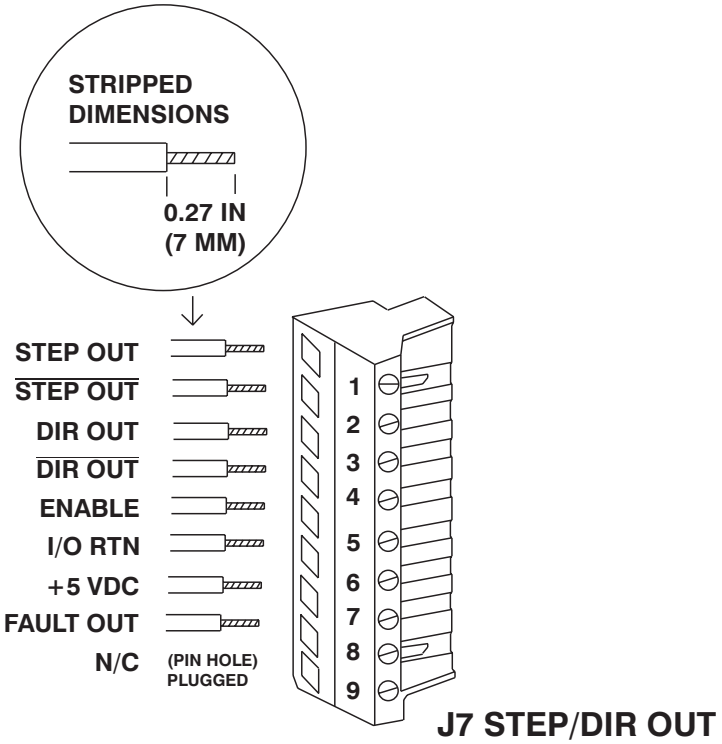

Step and direction inputs for other drives

Pin outputs for other units are shown as follows:

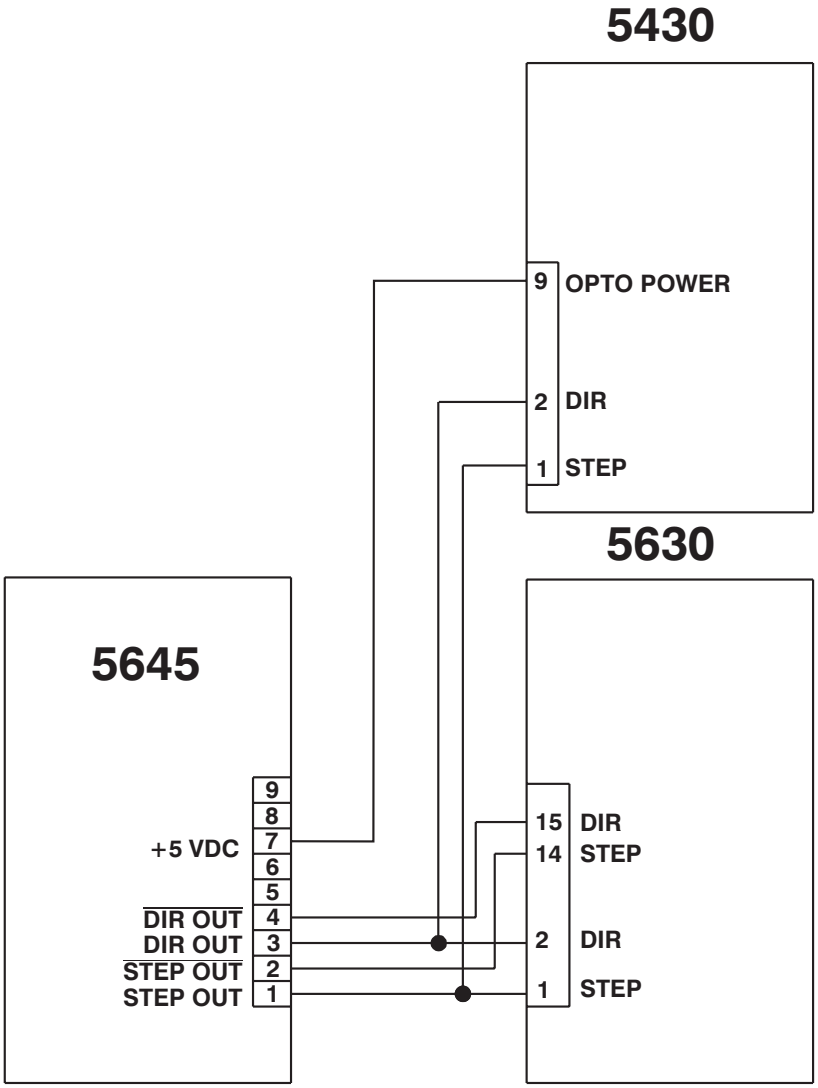

NOTE: THE 5645 STEP/DIR OUTPUTS CAN DRIVE TWO 5630 OR 5430 STEP/DIR INPUTS MAXIMUM

2.6 Setting the Switches

Introduction

Two switches are used to define functions and set the serial address

- S1 - sets step size, mid-range instability control, idle current reduction and current setting as described in section 2.6.1, “Setting Up Functions Using Switch S1.”
- S2 - sets serial addresses for multiple 5645 operation with RS-485 and RS-422 communication as described in section 2.6.2., “Setting Up Functions Using Switch S2.”

Groups of individual switches on switch S1 enable or disable these functions.

Location

The switches are located on the top of the 5645 as shown:

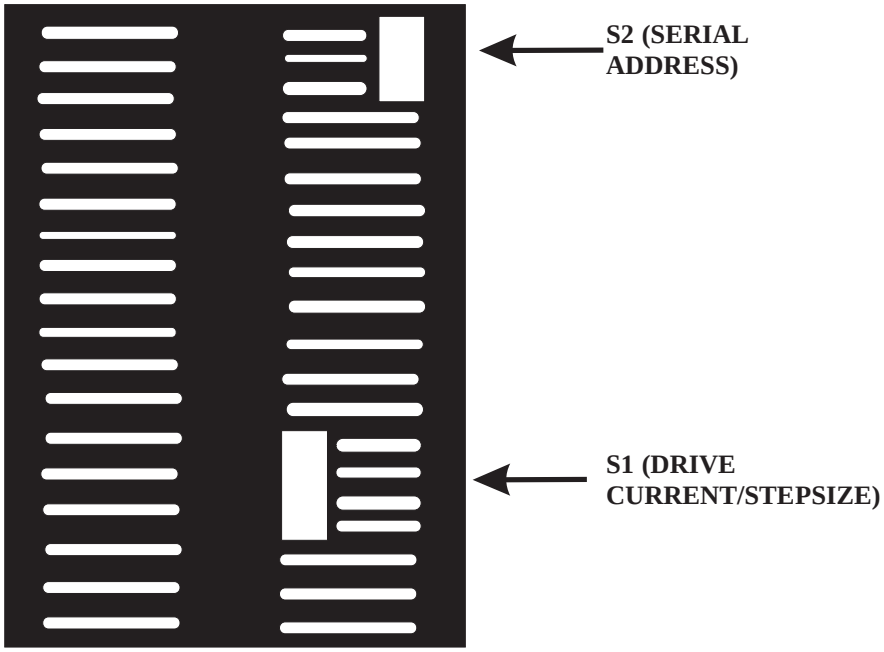

Note: *The arrows show the “UP” switch position referenced in the tables that follow.*

2.6.1 Setting Up Functions Using Switch S1

In this section

To understand and set up function:	Refer to section
Step Size	2.6.1.1
Mid-range instability control	2.6.1.2
Idle current reduction	2.6.1.3
Current	2.6.1.4

2.6.1.1 Step Set Up Using Switch S1

Definition

The step size sets the amount of rotation per input step. You may select from among five step sizes.

Benefits

Selecting a microstep size of 1/5 or smaller results in:

- Higher resolution
- Smoother low speed operation
- In some applications, ability to operate in low-speed resonance region

Procedure

With the power Off, select the step size you desire by setting the switch positions 1, 2 and 3 as follows:

To set step size as ...	Move switch SW1 settings to .....
full- 200 steps/motor rev. (Default factory setting)	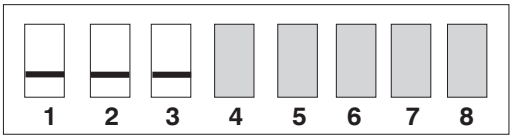
1/2 - 400 steps/motor rev.	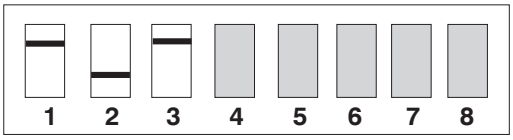
1/5 - 1,000 steps/motor rev.	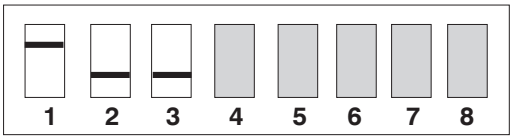
1/25 - 5,000 steps/motor rev.	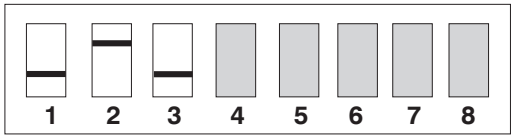
1/125 - 25,000 steps/motor rev.	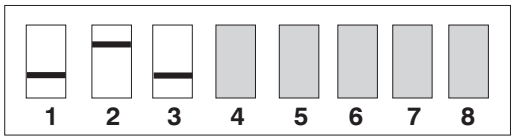

CAUTION

Do not set the switches to non-specified positions. A non-specified step size position will disable the unit and cause the FAULT LED to light.

2.6.1.2 Mid-Range Instability Control Set Up Using Switch S1

Definition

Mid-range instability and the resulting loss of torque occurs in any step motor/drive system due to the motor back EMF modulating the motor winding currents at certain speeds. Enable the mid-range instability function if your application is affected by loss of torque at mid-range speeds (indicated by the motor stalling at 50% maximum speed). When enabled, the circuitry advances or delays the switching of the output transistors with respect to the incoming pulse to damp the instability.

Benefit

This feature controls torque at mid-range speeds. When enabled, the motor maintains torque at mid-range operation, provided the torque load does not exceed motor torque ratings.

Procedure

With the power OFF, enable or disable mid-range instability by setting switch position 4 as follows:

To set control to ...	Move switch SW1 settings to .....
Enable (Default factory setting)	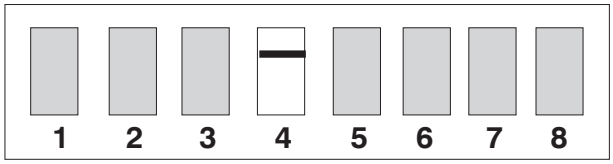
Disable	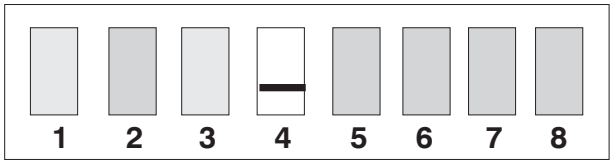

2.6.1.3 Idle Current Reduction Set Up Using Switch S1

Definition

The Idle Current Reduction (ICR) function reduces the phase current at times when the motor motion is commanded. Current to both windings is reduced by one-half nominal value.

This function requires approximately one second without a step input before reducing power. Current is maintained at this level until a step pulse is received. Then the drive returns the phase currents to the previously set value and the step occurs.

Note: *When ICR is enabled, the holding torque generated by the motor is reduced by approximately 50%. If you select a microstep setting and a current of 7.5 or 8.0 amps, ICR is automatically enabled, even if the switch is not set to enable. When ICR is enabled, motor stiffness around the holding position is reduced by approximately 50%.*

Benefits

The ICR function:

- Reduces motor and drive heating during stand-by operation.
- Reduces 5645 power dissipation.

Procedure

With the power OFF, enable or disable idle current reduction by setting position 5 as follows:

To set current reduction to ...	Move switch SW1 settings to .....
Enable (Default factory setting)	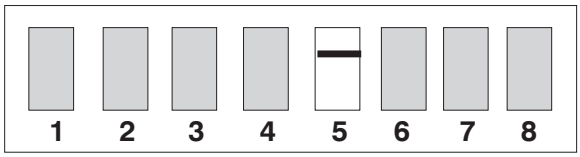
Disable	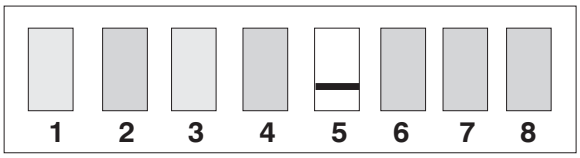

2.6.1.4 Current Set Up Using Switch S1

Definition

The current set up function determines the RMS current supplied to the motor. Switches 6, 7, and 8 are required for current set up.

Benefits

Current set up allows 5645 output to be matched to motor winding.

Procedures

With the power OFF, select from among the four current values by setting switch positions 6, 7, and 8 as follows:

To set RMS current to ...	Move switch SW1 settings to .....
5.0 amps (7.1 amps peak) (Default factory setting)	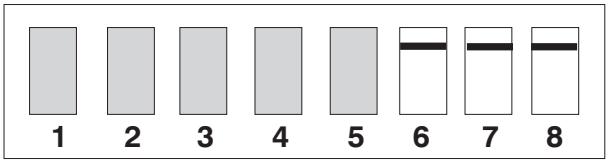
6.0 amps (8.5 amps peak)	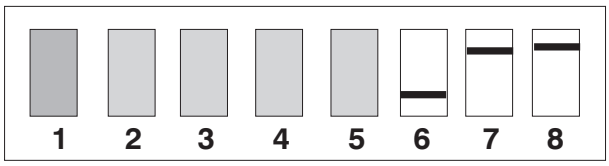
7.5 amps (10.6 amps peak)	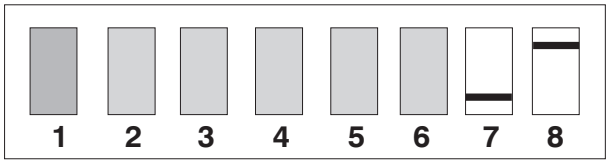
8.0 amps (11.3 amps peaK)	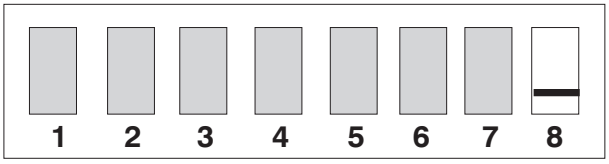

2.6.2 Setting Up the Serial Address Using Switch S2

Definition

This switch:

- determines if you are using RS-232 or RS-422/RS-485 communications.
- sets the address required for each 5645 on the RS-422 or RS-485 bus.

Procedure

The following diagram shows switch S2.

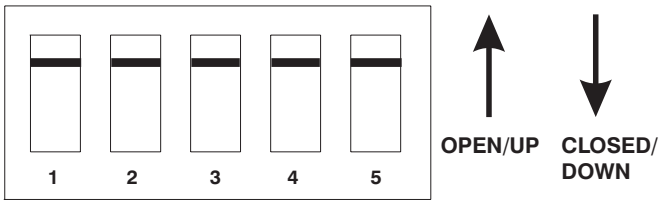

The switches are:

- ON in the down position
- OFF in the up position

1. Remove power from the 5645.
2. Refer to the table to set the 5645 to the appropriate address.

Note: *Addresses 0 to 30 are for RS-422/485 operation. Address 31 is for RS-232 operation.*

1. Each 5645 sub-system connected to the multidrop master must have a unique serial address. Addresses 0 to 30 are for RS-422/RS-485 operation.

2. RS-232 requires that all switches are in the up position (address 31).

S2 Address Table

Address	1	2	3	4	5	Address	1	2	3	4	5
0	On	On	On	On	On	16	On	On	On	On	Off
1	Off	On	On	On	On	17	Off	On	On	On	Off
2	On	Off	On	On	On	18	On	Off	On	On	Off
3	Off	Off	On	On	On	19	Off	Off	On	On	Off
4	On	On	Off	On	On	20	On	On	Off	On	Off
5	Off	On	Off	On	On	21	Off	On	Off	On	Off
6	On	Off	Off	On	On	22	On	Off	Off	On	Off
7	Off	Off	Off	On	On	23	Off	Off	Off	On	Off
8	On	On	On	Off	On	24	On	On	On	Off	Off
9	Off	On	On	Off	On	25	Off	On	On	Off	Off
10	On	Off	On	Off	On	26	On	Off	On	Off	Off
11	Off	Off	On	Off	On	27	Off	Off	On	Off	Off
12	On	On	Off	Off	On	28	On	On	Off	Off	Off
13	Off	On	Off	Off	On	29	Off	On	Off	Off	Off
14	On	Off	Off	Off	On	30	On	Off	Off	Off	Off
15	Off	Off	Off	Off	On	31*	Off	Off	Off	Off	Off

* For RS-232 operation (factory default)

4. Reconnect power to the 5645.
5. Repeat steps 1 through 4 for other 5645 units on the bus. Make sure to give the other units unique addresses.

3 Powering Up the 5645 Microstep Indexer/Drive

In this Chapter

This chapter explains how to power up the 5645 after installation. Topics are:

- Testing the installation
- Troubleshooting
- Repairing or replacing the 5645

3.1 Testing the Installation

Background

Perform the following test procedure to verify that the 5645 is installed properly, and that it was not damaged internally during shipment.

Configuration

The installation test power-up procedure requires a motor and computer or terminal to test the basic functionality of the 5645. A computer or terminal is required for complete testing.

Procedure

First, connect the computer or terminal by referring to Chapter 1 in the Programming Manual, “Setting up for Programming” (use the “Terminal Emulator” Mode for this test). Test your installation as follows:

WARNING

Perform this initial power-up with the motor shaft disconnected from the load. Improper wiring or undiscovered shipping damage could result in undesired motor motion. Be prepared to remove power if excessive motion occurs.

Connections test

1. Check over all wiring and mounting and verify correct installation. Especially check the 120 volt ac connections, the motor connections, and the grounding.
2. With the power Off, verify that the switch S1 settings are set as follows. The 5645 leaves the factory with these settings.

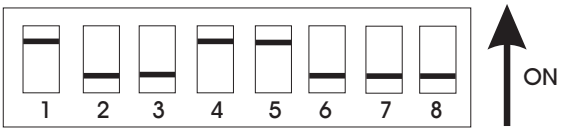

These settings enable the mid-range instability control, enable idle current reduction, set the step size to 1/25 step, and enable microstep current boost.

WARNING

Make sure the 120 volt ac power is removed before proceeding.

3. Unplug the J1 motor connector.
4. Switch On the 120 volt ac power. Check that the POWER LED is the only LED On.
5. Again switch the power Off.
6. Connect the J1 motor connector.
7. Switch On the 120 volt ac power. Check that the POWER LED is the only LED On. If the POWER LED is On, the connections to the motor are OK.

Signals test

1. Enable the 5645 (connect input pin 5 to pin 6 on J7).
2. Verify that the motor has holding torque by attempting to rotate the motor shaft. The energized motor shaft is either immovable or very resistant to rotation when the 5645 is enabled.
3. Jog the motor (connect input pin 7 to pin 9 on J5). The motor moves at the default jog speed.
4. Remove the jog input.
5. From the terminal or computer, type `GO.VEL <enter>`. This moves the motor at the default run speed.
6. Type `DIR = 1 <enter>`. This changes the default direction (if DIR = 0 was the initial setting).

   Repeat Step 5. The motor should run in the reverse direction.
7. Continue exercising the unit, testing it in your application.

Getting help

If you need further help with your installation, contact Pacific Scientific at 508-988-9800 from 8 a.m. to 5 p.m. Eastern Standard Time, or contact your Pacific Scientific distributor.

3.2 Troubleshooting

Introduction

The LEDs located on the front panel indicate unit status and are useful for troubleshooting. A table of the LEDs referencing the appropriate section for troubleshooting follows:

Fault output

The fault output is located on pin 8 of the J7 connector. This output is active when the unit is enabled and no fault condition is present.

LED Indicators

When this LED is On...	It signifies...	Troubleshoot using section...
POWER	Connection to 120 V ac power is within operational levels	3.2.1
ENABLED	Drive has received a valid Enable command. All internal circuits are enabled and the drive is not faulted. If the driver is faulted, this LED is off	3.2.2
STEP ACTIVE	The Drive has received a step command	3.2.3
POWER FAULT	Either an external or internal short or internal power supply problem	3.2.4
OVER TEMP	Heatsink temperature over 85 degrees C	3.2.5
μP FAULT	Indexer circuitry determines drive is faulted	3.2.6

Note: *If the ENABLED, STEP ACTIVE, or μP LEDs are not affected by commands over the serial link, there may be a communications problem. See Section 3.2.7.*

3.2.1 POWER LED Not On - 5645 Does Not Power Up

Procedure Follow this procedure if the 5645 POWER LED will not light when power is applied:

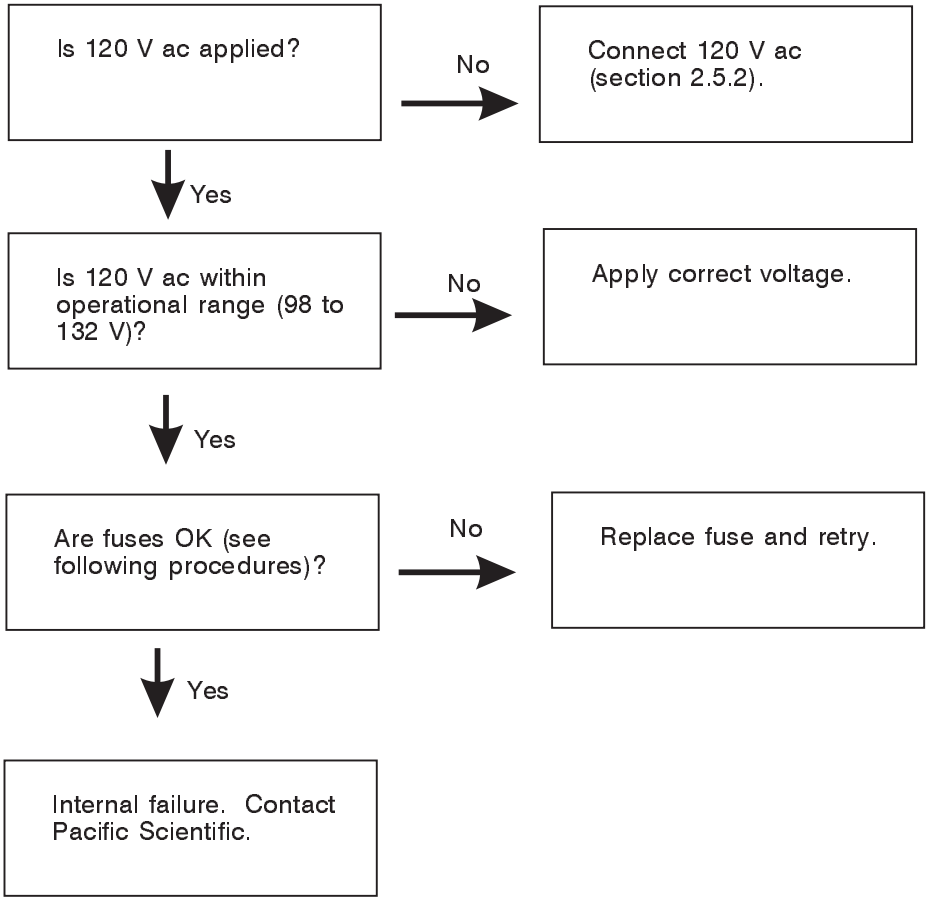

Fuse replacement

If an open fuse is suspected, replace the fuse as follows. Usually a fuse failure indicates a problem requiring factory repair.

1. Remove power and wait five minutes to allow the charge on the capacitors to dissipate.

WARNING

Do not operate the unit with the cover removed. Contact with energized components causes severe shock or burn.

2. Remove the 4 phillips-head screws located on the sides of the 5645.
3. Remove the cover.
4. Check the fuses, F1 and F2, located by the J1 120 V ac connector. Replace open fuses as follows:

Replace fuse...	**With Buss® type...**
F1	MDA 20 amp
F2	MDL 1/2 amp

5. Replace the cover.

3.2.2 ENABLED LED Not On - 5645 Does Not Recognize Enable Input

Procedure Follow this procedure if the 5645 ENABLED LED will not light when an enable input is applied:

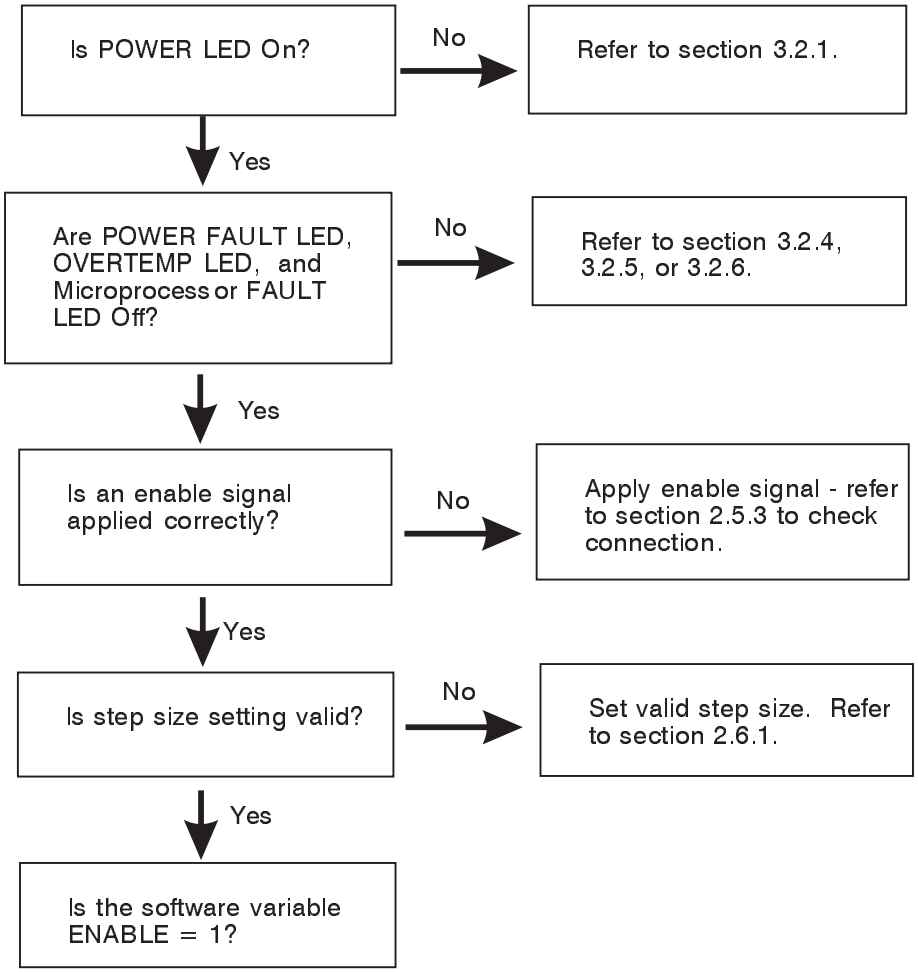

3.2.3 STEP ACTIVE LED Not On or Motor Doesn't Step - 5645 Does Not Recognize Step Input or Defective Connection

Procedure

Follow this procedure if the step motor will not step or the STEP LED will not light when an enable input and a motion command is applied:

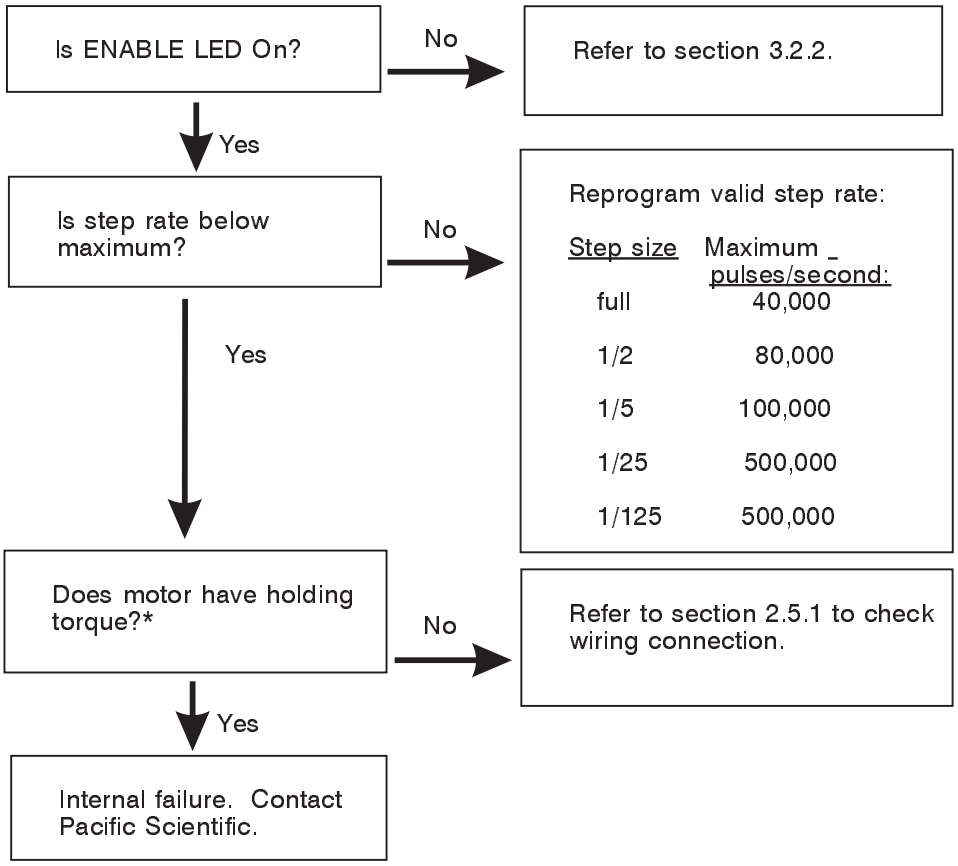

*** Note:** *Be careful not to confuse the holding torque (due to current in the windings and mechanical resistance) with the detent torque (due to mechanical resistance only).*

To feel the difference between the two, attempt to rotate the shaft with power and enable applied. There should be high resistance. Then, disable the drive or turn power Off and rotate the motor shaft. There should be some resistance, but rotation should occur.

3.2.4 POWER FAULT LED On - 5645 Displays Power Fault

Procedure Follow this procedure if the 5645 POWER FAULT LED lights during operation:

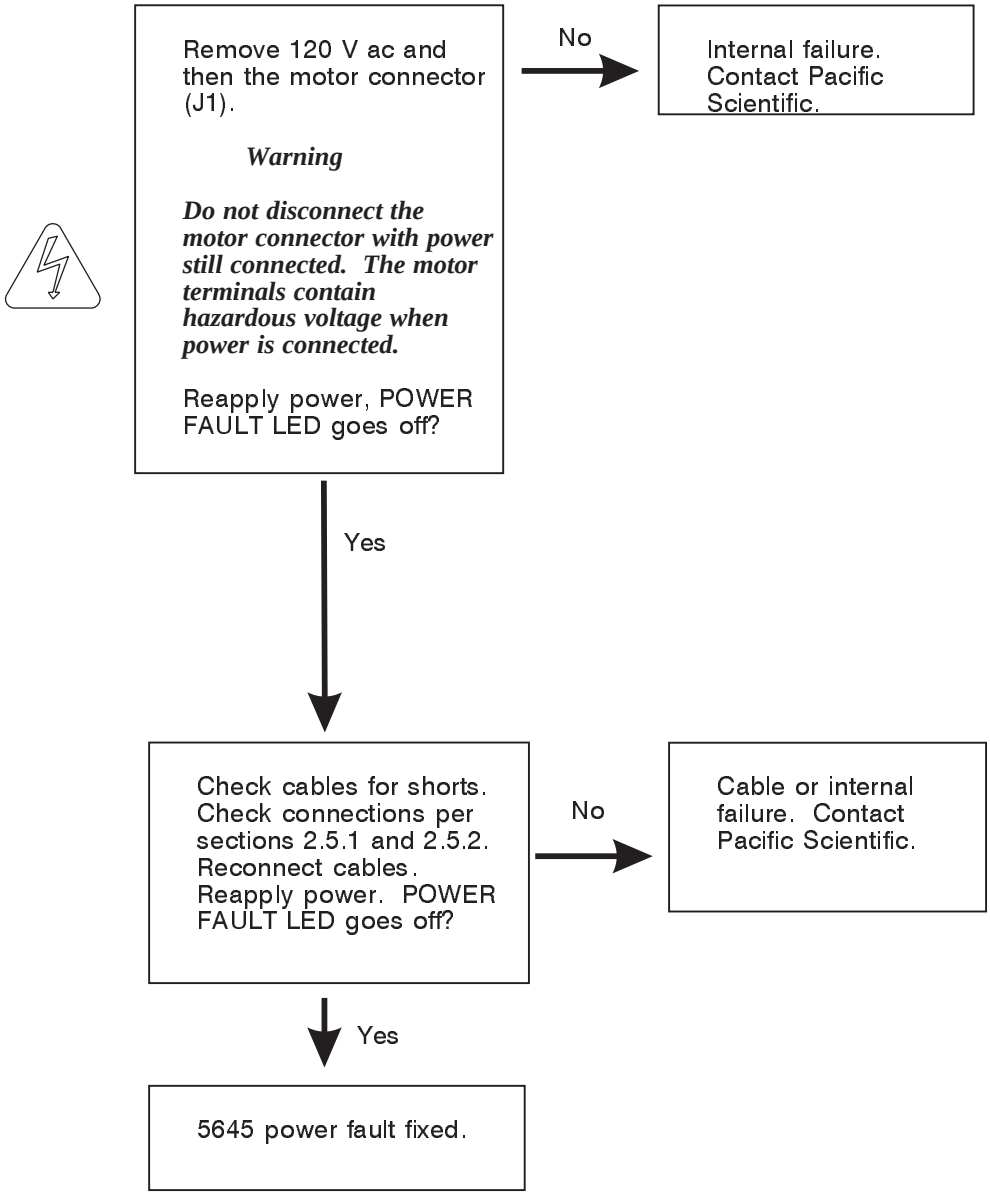

3.2.5 OVER TEMP LED On - 5645 Senses Excessive Temperature

Procedure Follow this procedure if the 5645 OVER TEMP lights during operation:

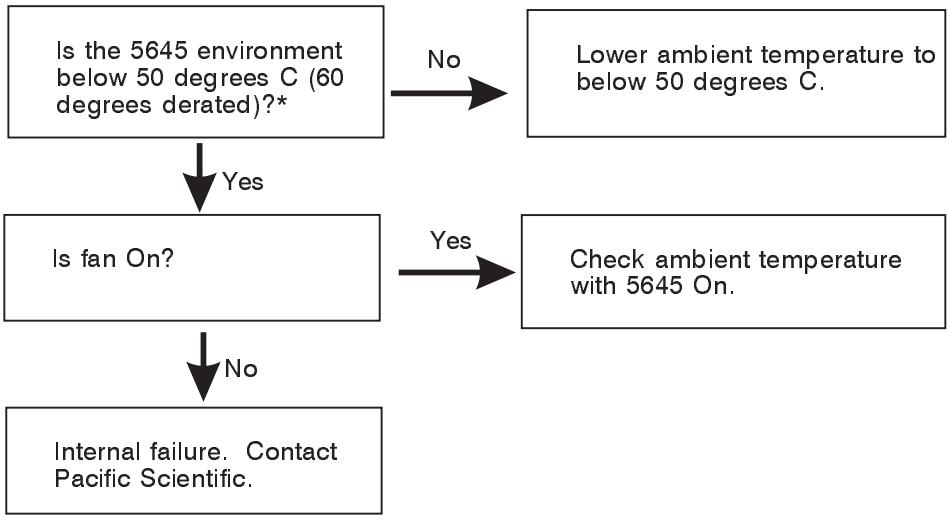

*** Note:** *Power dissipated by the drive will heat a sealed enclosure. Measure drive temperature under operational conditions.*

3.2.6 MICROPROCESSOR FAULT LED ON - Indexer Senses Drive Fault

Procedure Follow this procedure if the 5645 MICROPROCESSOR FAULT LED lights during operation:

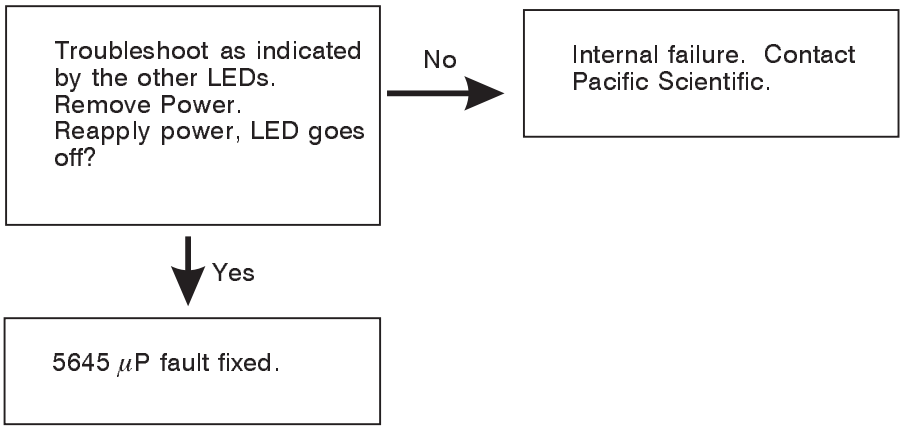

3.2.7 Communications Interface Fault

Procedure Follow this procedure if the terminal does not communicate with the indexer/drive:

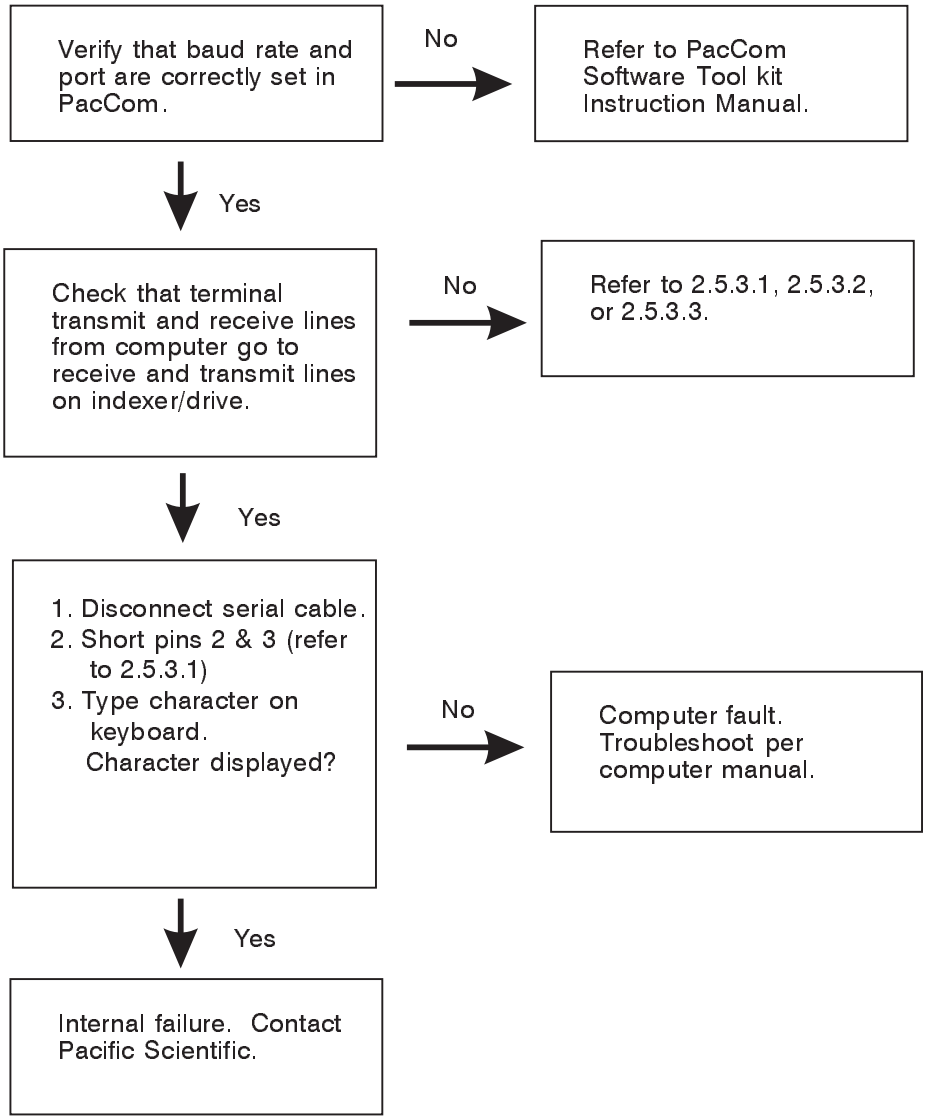

5645 defective

If you cannot correct the problem, return the drive to Pacific Scientific for replacement.

Return procedure

1. Call Pacific Scientific at (508) 988-9800 from 8:00 a.m. to 5:00 p.m. Eastern Standard Time to get a Returned Materials Authorization Number (RMA#).

   Note: *Do not attempt to return the drive, motor or any other equipment without a valid RMA#. Returns received without a valid RMA# are not accepted and are returned to the sender.*

2. Pack the drive in its original shipping carton. Pacific Scientific is not responsible or liable for damage resulting from improper packaging or shipment.

3. Ship the 5645 to:

   Pacific Scientific

   Motion Technology Division

   110 Fordham Road

   Wilmington, MA 01887

   Attn: Motion Control Repair Department, RMA# _____

   Note: *Do not ship Pacific Scientific motors to the above address. The correct address for motor returns is:*

   Pacific Scientific

   Motor Products Division

   4301 Kishwaukee Street

   Rockford, IL 61105

   Attn: Motor Repair Department, RMA# _____

Shipment of your 5645 or motor to Pacific Scientific constitutes authorization to repair the unit. Refer to Pacific Scientific's repair policy for standard repair charges. Your unit will be repaired and return-shipped via UPS Ground delivery. If another means of shipping is desired, please specify this at the time of receiving an RMA#.

Appendix A - Specifications

Electrical

Input voltage	120 volt ac (+ 10%, -20%)
Input current	13 A RMS maximum
Fuse	Buss MDA 20 on 120 volt ac hot line Buss MDL 1/2 on logic supply
Drive circuit	Two-phase bipolar, chopper current regulated
Bus voltage	160 volt dc nominal at 120 volt ac input
Rated current	Switch selectable: 8.0 A RMS (11.3 A peak microstepping) nominal 7.5 A RMS (10.6 A peak microstepping) nominal 6.0 A RMS (8.5 A peak microstepping) nominal 5.0 A RMS (7.1 A peak microstepping) nominal

Step size

Switch selectable	Steps/motor (1.8° stepper motor)
Full	200
1/2	400
1/5	1,000
1/25	5,000
1/125	25,000

Step input-output lag

1. With mid-range instability control **enabled** and with step frequencies less than 500 full steps per second, input-to-output lag is **less than 500 microseconds**.

   At step frequencies greater than 500 full steps per second, input-to-output lag is **less than 270 degrees** of the input step pulse period.

2. With mid-range instability control **disabled**, input-to-output lag is **less than 10 microseconds** for all step frequencies.

Chopper frequency

20 kHz, nominal

Maximum pulse rate

Switch selectable	Pulses/second
full step	40,000 pulses/second
1/2 step	80,000 pulses/second
1/5	100,000 pulses/second
1/25	500,000 pulses/second
1/125	500,000 pulses/second

Minimum ramp time

1. With mid-range instability control enabled **-50 milliseconds to 20,000 full steps/sec..**
2. With mid-range instability control disabled **-no minimum**.

Environmental

Operating temperature

0 to 50 degrees C at full rated current

0 to 60 degrees C 5.0 or 6.0 Amp RMS with idle current reduction enabled

Storage temperature

-55 degrees to 70 degrees C

Humidity

10 to 90%, noncondensing

Altitude

5,000 feet (1500 meters)

Mechanical

Power dissipation

For an estimate of the power dissipation for use in cabinet cooling requirements, use the values shown:

For an RMS current of (amps):	Use a value of (watts):
8.0	90
7.5	80
6.0	50
5.0	35

Dimensions	Refer to section 2.4
Weight	10 pounds (4.5 kg)

Appendix B Order Number & Ordering Information

Background

This appendix lists the 5645 part numbers and gives information on ordering.

5645 part number table

Part	Order Number	Comment
Microstep Indexer/Drive	5645	
Connector kit	106-564500-01	PCD 3-, 5-, 9-, and 17-pin connectors and 9-pin D connector with housing.
Installation Manual	903-564501-04	
Programming Manual	903-564502-02	
Motor cable	SPC-xxx	xxx represents length in feet; for example, SPC-005 is a cable 5 feet long. For lengths over 50 feet, contact Pacific Scientific. The connectors are MS on the motor end and PCD on the drive end to connect Pacific Scientific motors.
Encoder Cable	SEC-xxx	xxx represents length in feet; for example, SEC-010 is a cable 10 feet long. For cable lengths over 50 feet, contact Pacific Scientific. The connectors are MS.

How to order	Contact Pacific Scientific to order these parts.
Call	508-988-9800 from 8am to 5pm Eastern Standard Time.
Fax	508-988-9940
Write	Pacific Scientific
	Motion Technology Division
	110 Fordham Road
	Wilmington, MA 01887

Appendix C Series/Parallel Connections

Introduction

Several motor connections are possible when using a bipolar drive.

- 8-lead motor
- 6-lead motor
- 4-lead motor

The various connection schemes produce different torque/speed characteristics. They also affect the current rating in the motor.

8-lead motor

The 8-lead motor is the most versatile configuration. It can be connected by the user in either an 8-lead, 4-lead (series or parallel) or 6-lead configuration.

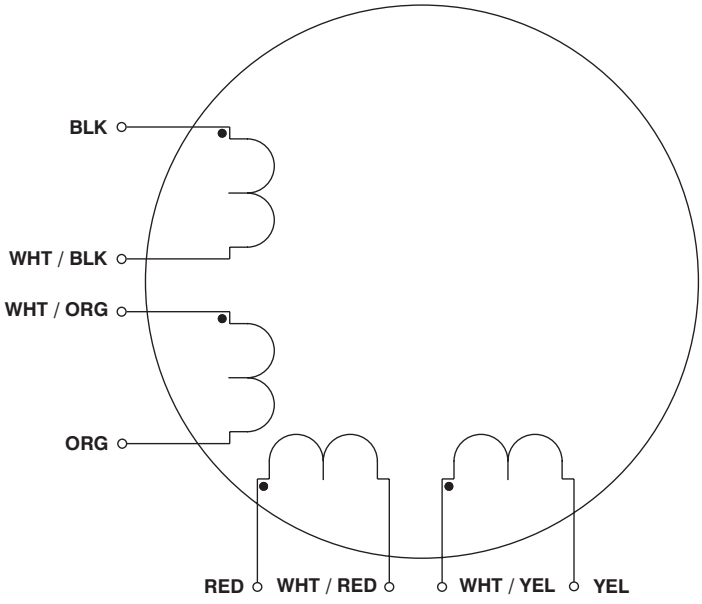

Connection table

Refer to the table below for detailed connection information.

Connection	Terminal #	Lead Color	Driver Connection
4-lead bipolar series	1	Black (Blk)	A
	3	Orange (Org)	$\overline{A}$
	2	Red	B
	4	Yellow (Yel)	$\overline{B}$
	6 & 5	Wht/Blk & Wht/Org	
	7 & 8	Wht/Red & Wht/Yel	
4-lead bipolar parallel	1 & 5	Blk & Wht/Org	A
	3 & 6	Org & Wht/Blk	$\overline{A}$
	2 & 7	Red & Wht/Yel	B
	4 & 8	Yel & Wht/Red	$\overline{B}$
6-lead unipolar	1	Black (Blk)	A
	3	Orange (Org)	B
	2	Red	C
	4	Yellow (Yel)	D
	6 & 5	Wht/Blk & Wht/Org	+V
	7 & 8	Wht/Red & Wht/Yel	+V

6-lead motor

The 6-lead motor is normally used with unipolar drives. In some cases, the 6-lead motor can be used in a 4-lead series configuration for use with bipolar drives.

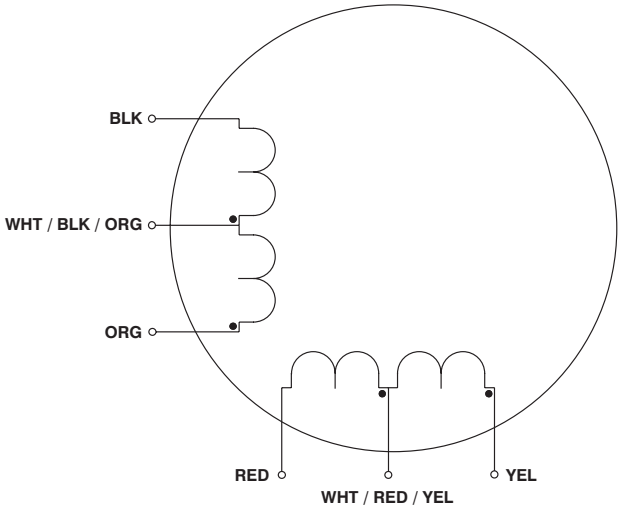

Connection table

Refer to the table below for detailed connection information.

Connection	Terminal #	Lead Color	Driver Connection
6-lead unipolar	1	Black (Blk)	A
	3	Orange (Org)	B
	2	Red	C
	4	Yellow (Yel)	D
	5	Wht/Blk/Org	+V
	6	Wht/Red/Yel	+V

Connection	Terminal #	Lead Color	Driver Connection
4-lead bipolar series	1	Black (Blk)	A
	3	Orange (Org)	$\overline{A}$
	2	Red	B
	4	Yellow (Yel)	$\overline{B}$
	5	Wht/Blk/Org	None
	6	Wht/Red/Yel	None

Note: *Terminals 7 and 8 are not used.*

4-lead motor

The 4-lead motor is for use only with bipolar drives.

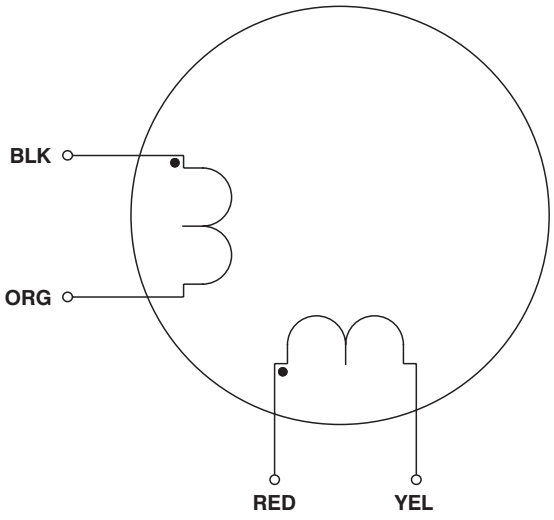

Connection table

Refer to the table below for detailed connection information.

Connection	Terminal #	Lead Color	Driver Connection
4-lead bipolar	1	Black (Blk)	A
	2	Orange (Org)	$\overline{A}$
	3	Red	B
	4	Yellow (Yel)	$\overline{B}$

Note: *Terminals 5, 6, 7 and 8 are not used.*

Winding Connections

Series

Connecting both halves in series results in the drive current flowing through twice as many turns compared with using one half-winding only. For identical currents, this doubles the "amp-turn" and produces a corresponding increase in torque. In practice, the torque increase is seldom 100% due to the non-linearity of the magnetic material. Equally, the same torque will be produced at half the drive current when the windings are in series.

Doubling the effective number of turns in the windings means that the inductance increases by a factor of four. This causes the torque to drop off much more rapidly as speed increases. As a result, the series mode is only useful at low speeds. The maximum shaft power obtainable in series is typically half that available in parallel using the same current setting on the drive.

Conversely, connecting the windings in series will double the total resistance and the current rating is reduced by a factor of 1.4. The provides a safe current of 3.5 amps for a 5.0 amp motor series.

Parallel

A winding that can be connected in parallel is either an 8-lead motor or 6-lead motor.

8-lead

Connecting the two half-windings of an 8-lead motor in parallel allows the current to divide itself between the two coils. It does not change the effective number of turns and therefore the inductance remains the same. At a given drive current, the torque characteristics will be the same for the two half-windings in parallel as it is for one of the windings on its own.

Connecting the windings of an 8-lead motor in parallel has the same effect as halving the total resistance. For the same power dissipation in the motor, the current may now be increased by 40%. Therefore, the 5 amp motor will accept 7 amps with the winding in parallel. This provides a significant increase in the available torque.

6-lead

"Parallel" in a 6-lead motor refers to the use of one half-winding only. The current rating of a stepper motor is determined by allowable temperature rise. Unless the motor manufacturer's data states otherwise, the rating is a "unipolar" value and assumes both phases of the motor are energized simultaneously. Therefore, a current of 5 amps means that the motor will accept 5 amps flowing in each half-winding.

Summary

As a general rule, parallel connection is preferred over the other options. It produces a flatter torque curve and greater shaft power. Series connection is useful when a high torque is required at low speeds. It allows the motor to produce full torque at low speeds from lower current drives.

Care should be taken to avoid overheating the motor using series connection since its current rating is lower in this mode. Series connection also carries a greater likelihood of resonance problems due to high torque produced in the low speed region.

Index

A

Address settings, 2-48
Air ventilation, 2-5
Applications, 1-3

B

Bipolar chopper drive, 1-1
Burr-Brown TM2500, 2-25
Bus capacitors, safety, 2-2

C

Cabinet selection, 2-5
Cable
  J1, 2-11
  J2, 2-18
  J3, 2-21
  J4, 2-30
  J5, 2-30
  J6, 2-35
  J7, 2-39
Closed loop control, 1-3
Computer troubleshooting, 3-12
Connections
  series/parallel, C-1
  testing, 3-2
  winding, C-5
Connector
  J1, 2-11
  J2, 2-18
  J3, 2-20
  J4, 2-30
  J5, 2-30
  J6, 2-36
  J7, 2-27
Current, 1-2

D

Definition, general drive, 1-1
Differential wiring
  inputs, 2-32
  outputs, 2-33
DIR variable, 3-3
Direction
  inputs, 2-24
  outputs, 1-2
Discrete I/O, 2-27
  cable, 2-30
  connector, 2-30
  inputs differential wiring, 2-32
  outputs differential wiring, 2-33
  procedure, 2-31
Drive
  current/stepsize, see S1 switch
  features, 1-1
Dimensions,
  inches, 2-6
  millimeters, 2-7

E

Earth ground, safety, 2-4
ENABLED, 3-3, 3-4, 3-6
Enabling the drive, 3-2
Encoder connection, 2-38
Encoder inputs, 1-3
Encoder/step & direction input, 2-34
  cable, 2-36
  connector, 2-36
  ground loops, 2-36
  input table, 2-34
  PacSci cable, 2-35
  procedure, 2-36

F

Fan input, distance, 2-8
Fault output, 2-27, 3-4
Frequency, instability, 2-31
Function, GO.VEL, 3-2
Fuse, replacement, 3-6

G

GO.VEL, function, 3-3
Ground loops, 2-30, 2-36, 2-39

H

Heating &
  idle current reduction, 2-32
Help, getting, 3-3
Holding torque and
  idle current reduction, 2-46
Home switch, 2-30

I

I/O, return, 2-30
ICR, see Idle current reduction
Idle current reduction, 2-46
  setup, 2-46
  benefits, 2-46
  definition, 2-46
  procedure, 2-46
Indexer features, 1-1
Input/Output
  connections diagram, 2-10
Inputs, 1-2
  differential wiring, 2-32
  encoder/step and direction, 2-34
  installation, 2-31
  programmable, 2-28
  table 2-28 to 2-30
INPx, variable, 2-28
Inspecting, 2-1
Instability frequency, 2-31
Installation, 2-1
Internal power supplies, 1-1

J

J1-Motor, 2-11
  cable, making your own, 2-11
  connector, 2-11
  8-lead series procedure, 2-14
  8-lead parallel procedure, 2-16
  4-lead procedure, 2-13
  PacSci cable, 2-11

J2-120 V ac power, 2-18
cable, 2-18
connector, 2-18
procedure, 2-19
J3-Serial port, 2-19
cable, 2-21
connector, 2-20,
I/O table, 2-20
multi-unit control, 2-19
RS-422 or RS-485 converter, 2-23
RS-422 or RS-485 procedure, 2-23
T10 procedure, 2-25
RS-232 procedure, 2-21
J4-Discrete I/O, 2-27
cable, 2-30
connector, 2-30
inputs differential wiring, 2-32
outputs differential wiring, 2-33
procedure, 2-31
J5-Discrete I/O, 2-27
cable, 2-30
connector, 2-30
inputs differential wiring, 2-32
outputs differential wiring, 2-33
procedure, 2-31
J6-Encoder/step &
direction input, 2-34
cable, 2-36
connector, 2-36
ground loops, 2-36
input table, 2-34
PacSci cable, 2-35
procedure, 2-36
J7-Step and direction outputs,2-38
cable, 2-39
connector, 2-39
fault output, and enable input, 2-6
ground loops, 2-39
procedure, 2-40
Jog, 3-2
Jog- functionality, 2-29
Jog+ functionality, 2-29

L

LEDs, 3-4
ENABLED, 3-3, 3-4, 3-8
POWER, 3-2, 3-4
POWER FAULT, 3-2, 3-3, 3-6, 3-9
μFAULT, 3-4, 3-9
Limit functionality, 2-29

M

Manual, how to use, 1-4
Memory, 1-3
μFAULT, 3-4, 3-9
Mid-range instability
control, 1-1, 2-45
benefits, 2-45
procedure, 2-45
definition, 2-45
Motor, 2-11
cable, making your own, 2-11
connector, 2-11
8-lead series procedure, 2-14
8-lead parallel procedure, 2-16
4-lead procedure, 2-13

PacSci cable, 2-11
selection, 2-2
Motor terminals, safety, 2-5
Motor winding current, 2-2
Mounting, 2-5
dimensions, 2-6
guidelines, 2-8
procedure, 2-8
Multiple units, 1-2, 2-14

N

NEMA enclosure, 2-5
Noise pickup reduction, 2-10

O

On/Off convention, 2-19
120 V ac power, 2-18
cable, 2-18
connector, 2-18
procedure, 2-19
Optically isolated connections
safety, 2-2
Order information, B-1
Outputs
differential wiring, 2-33
general, 1-2
procedure, 2-18
table, 2-27
OUTx, variable, 2-27
OVER TEMP, 3-4
Overview, general, 1-1

P

PacCom, ToolKit, 3-9
Packing list, 2-1
PacSci, StepperBASIC, 1-1
Phase current reduction, 2-32
POWER, 3-2, 3-4, 3-5
Power dissipation ,
cabinet cooling, 2-8
idle current reduction, 2-46
POWER FAULT, 3-2, 3-4, 3-5, 3-6
Power, requirement, 3-5
Power-up, 3-1
PREDEF.INPx, variable, 2-29
PREDEF.OUT, variable, 2-27
Predefined outputs, 2-27
Programmable inputs, 2-28

R

RAM, battery-backed, 1-3
Repair procedure, 3-13
Replacement procedure, 3-13
Return I/O, 2-30
RMT.START, variable, 2-29
RS-422 or RS-485
introduction, 1-2, 2-23
procedure, 2-23
RS-232
introduction, 1-2, 2-21
procedure, 2-21

S

S1 and S2 switches
  location, 2-42
  setting, 2-42
S1 Switch
  default switch setting, 3-1
  idle current reduction, setup, 2-46
  mid-range instability control
    set up, 2-45
  setting up functions using, 2-29
  step set up, 2-30
S2 Switch, Serial address setup, 2-48
Safety, 2-4
SEEK.HOME statement, 2-28
Serial address, 2-48
  switch, see S2 switch
Serial port, 2-19
  cable, 2-21
  connector, 2-20
  multi-unit control, 2-19
  RS-422 or RS-485
    converter, 2-23
    introduction, 1-2, 2-19
    procedure, 2-23
  T10, procedure, 2-25
  RS-232,introduction, 1-2, 2-19
  RS-232, procedure, 2-21
Shock hazard, reduction, 2-10
Short circuit protection, circuitry, 1-1
Shunt regulator circuitry, 1-1
Specifications, A-1
Start functionality, 2-29
Statement, SEEK.HOME, 2-19
Status indicators, 1-1, 3-4
STEP ACTIVE, 3-4, 3-8
STEP.DIR.INPUT, variable, 2-34
Step and direction outputs
  cable, 2-39
  connector, 2-39
  fault output, and enable input, 2-6
  ground loops, 2-39
  introduction, 1-2, 2-27
  output table, 2-39
  procedure, 2-40
Step inputs, 2-24
Step outputs, 1-2
Step set up, 2-30
  benefits, 2-30
  definition, 2-30
  procedure, 2-30
Step size, 1-1, 2-43
Stop functionality, 2-29
Stop switch, emergency, 2-29
Storage, 2-1
System diagram, 1-3, 2-10

T

T10 terminal, 2-25
  installation, 2-25
  parameters, 2-26
Temperature, 2-1, 2-2, 2-5
Testing, 3-1
  connections, 3-1
  excessive motion, 3-1
  procedure, 3-2
  signals, 3-3
  loss, 2-31
Troubleshooting, 3-4

U

Unpacking, 2-1

V

Variable
- DIR, 3-3
- INPx, 2-28
- OUTx, 2-27
- PREDEF.INPx, 2-29
- RMT.START, 2-29
- STEP.DIR.INPUT, 2-34

Variables, On/Off convention, 2-19
Ventilation, 2-5
Voltage, internal drive, 2-4

W

Weight, 2-8, A-3
Wiring, 2-10